Operating Instructions · Edition 11/2008

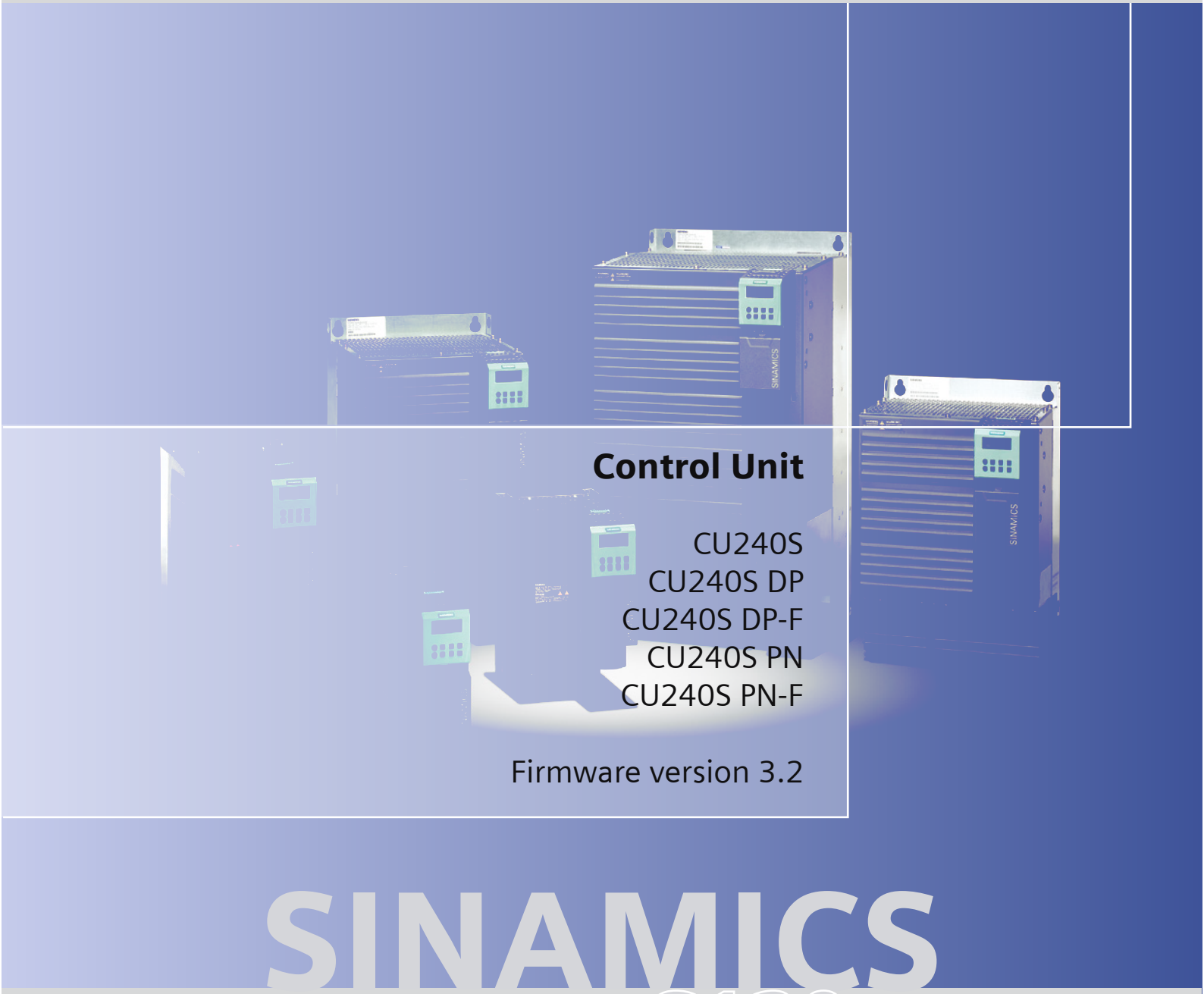

Control Unit

CU240S
CU240S DP
CU240S DP-F
CU240S PN
CU240S PN-F

Firmware version 3.2

SINAMICS
G120

SIEMENS

SIEMENS

SINAMICS

G120
Control Units CU240S

Operating Instructions

Introduction 1

Safety notes 2

Description 3

Installing/Mounting 4

Commissioning 5

Communication 6

Operation 7

Troubleshooting 8

Service and maintenance 9

Technical data 10

Spare parts/Accessories 11

Appendix A

List of abbreviations B

Edition 11/2008, Firmware version 3.2

11/2008 - FW 3.2
A5E00766042B AE

Legal information

Warning notice system

This manual contains notices you have to observe in order to ensure your personal safety, as well as to prevent damage to property. The notices referring to your personal safety are highlighted in the manual by a safety alert symbol, notices referring only to property damage have no safety alert symbol. These notices shown below are graded according to the degree of danger.

⚠DANGER
indicates that death or severe personal injury **will** result if proper precautions are not taken.

⚠WARNING
indicates that death or severe personal injury **may** result if proper precautions are not taken.

⚠CAUTION
with a safety alert symbol, indicates that minor personal injury can result if proper precautions are not taken.

CAUTION
without a safety alert symbol, indicates that property damage can result if proper precautions are not taken.

NOTICE
indicates that an unintended result or situation can occur if the corresponding information is not taken into account.

If more than one degree of danger is present, the warning notice representing the highest degree of danger will be used. A notice warning of injury to persons with a safety alert symbol may also include a warning relating to property damage.

Qualified Personnel

The device/system may only be set up and used in conjunction with this documentation. Commissioning and operation of a device/system may only be performed by **qualified personnel**. Within the context of the safety notes in this documentation qualified persons are defined as persons who are authorized to commission, ground and label devices, systems and circuits in accordance with established safety practices and standards.

Proper use of Siemens products

Note the following:

⚠WARNING
Siemens products may only be used for the applications described in the catalog and in the relevant technical documentation. If products and components from other manufacturers are used, these must be recommended or approved by Siemens. Proper transport, storage, installation, assembly, commissioning, operation and maintenance are required to ensure that the products operate safely and without any problems. The permissible ambient conditions must be adhered to. The information in the relevant documentation must be observed.

Trademarks

All names identified by ® are registered trademarks of the Siemens AG. The remaining trademarks in this publication may be trademarks whose use by third parties for their own purposes could violate the rights of the owner.

Disclaimer of Liability

We have reviewed the contents of this publication to ensure consistency with the hardware and software described. Since variance cannot be precluded entirely, we cannot guarantee full consistency. However, the information in this publication is reviewed regularly and any necessary corrections are included in subsequent editions.

Siemens AG
Industry Sector
Postfach 48 48
90026 NÜRNBERG
GERMANY

A5E00766042B AE
℗ 11/2008

Copyright © Siemens AG 2007/, 2008.
Technical data subject to change

Table of contents

1 Introduction 9
1.1 Documents for the Inverter 9
1.2 Description of Document Classes 10
2 Safety notes 11
3 Description 15
3.1 Accessories for the CU240S 16
3.2 Features and Functions of the CU240S 17
3.3 Layout and Block diagram 19
3.4 Interfaces of the Control Units 23
3.5 Factory Settings of the Control Unit 26
4 Installing/Mounting 29
4.1 Fitting the CU to the PM 29
4.2 Connecting a CU240S via Terminals 31
4.2.1 Frequency setpoint via terminals 33
4.3 Connecting a CU240S via USS on RS485 35
4.4 Connecting a CU240S DP or CU240S DP-F via PROFIBUS DP 37
4.4.1 Connecting the PROFIBUS DP 37
4.4.2 Screening the bus cable and EMC precautions 40
4.5 Connecting a CU240S PN via PROFINET 42
4.6 Installation Check List 44
5 Commissioning 45
5.1 Single Commissioning 47
5.2 Series Commissioning 48
5.2.1 Common Information to Series commissioning 48
5.2.2 Upload and Download of Parameter Sets 50
5.3 Common Commissioning Information 53
5.4 Message F00395 54
5.5 Commissioning using the BOP 55
5.5.1 The Basic Operator Panel (BOP) 55
5.5.1.1 Function Keys of the BOP 56
5.5.1.2 Changing Parameters via BOP 57
5.5.2 Overview Commissioning with the BOP 58
5.5.3 Basic Commissioning 59
5.5.3.1 Quick Commissioning 59
5.5.3.2 Calculating the Motor and Control Data 63
5.5.3.3 Speed Control Optimization 65
5.5.4 Commissioning the Application 66

5.5.5 Reset Parameters to Factory Settings ... 77
5.5.6 Commissioning the Fail-Safe Functions ... 78
5.5.6.1 Parameters for Fail-Safe Functions ... 80
5.5.6.2 Password for fail-safe functions ... 81
5.5.6.3 Checksums ... 81
5.5.6.4 General Steps for Commissioning Fail-Safe Functions ... 82
5.5.6.5 Common Step-by-Step Descriptions For Fail-Safe Functions ... 83
5.5.6.6 Factory Reset of Fail-safe Parameters ... 88
5.5.6.7 Acceptance Test and Acceptance Log ... 89
5.5.7 Series commissioning using the BOP ... 91

5.6 Commissioning with STARTER ... 93
5.6.1 Single Commissioning with STARTER ... 94
5.6.2 Series Commissioning with STARTER ... 95

5.7 Commissioning with the MMC ... 96
5.7.1 Parameter Download via MMC ... 96
5.7.2 Series commissioning with MMC ... 97

5.8 Commissioning the Encoder ... 102
5.8.1 Parameterizing the Encoder Interface ... 104
5.8.2 Encoder Fault Codes ... 107

5.9 Parameters ... 108
5.9.1 Write parameters ... 108
5.9.2 Monitoring parameters ... 109
5.9.3 Parameter Attributes ... 109

5.10 Start-up and Swap Behavior of the Inverter ... 114
5.10.1 Normal Start-up Behavior of the Inverter ... 114
5.10.2 Swap Behavior of the Inverter ... 116

6 Communication ... 119

6.1 PROFIdrive Profile V4.1 ... 119
6.1.1 Use Data Structure as Defined in PROFIdrive Profile V4.1 ... 119
6.1.2 Data Structure of the Parameter Channel ... 120

6.2 Cyclic Communication ... 126
6.2.1 Standard Telegram Structure ... 126
6.2.2 VIK/NAMUR Telegram Structure ... 128
6.2.3 PROFIsafe Telegram Structure ... 129
6.2.4 Switch over behavior of Communication telegram ... 130
6.2.5 Control and status words ... 133

6.3 Acyclic Communication ... 138
6.3.1 Parameter Channel ... 139

6.4 Communication via PROFIBUS ... 145
6.4.1 General Information About PROFIBUS for SINAMICS ... 145
6.4.2 Communication Settings PROFBUS DP ... 146
6.4.3 PROFIBUS Configuration Example with SIMATIC S7 ... 150
6.4.3.1 Read Parameters ... 154
6.4.3.2 Write Parameters ... 159

6.5 Communication via PROFINET ... 161
6.5.1 Real-Time (RT) Communication ... 162
6.5.2 Addresses ... 162
6.5.3 PROFINET Communication Parameters ... 165
6.5.4 PROFInet Configuration Example with SIMATIC S7 ... 168
6.5.4.1 Read Parameters ... 171

6.6 Communication via USS 173
6.6.1 Universal serial interface (USS) 173
6.6.2 SUB D connector for RS485 interface 174
6.6.3 Structure of a USS Telegram 176
6.6.4 Use data area of USS telegram 178
6.6.5 USS Parameter Channel 179
6.6.6 Timeouts and other errors 180
6.6.7 USS Process Data Channel (PZD) 183

7 Operation 185

7.1 ON/OFF Commands 185

7.2 Operation States Displayed via LED 188
7.2.1 LED Display 188

8 Troubleshooting 193

8.1 Faults and Alarms 193

8.2 Diagnostics Display 195

8.3 Troubleshooting with the BOP 196

8.4 Troubleshooting via the Control System 198

9 Service and maintenance 201

10 Technical data 203

10.1 CU240S Performance ratings 203

11 Spare parts/Accessories 205

11.1 Basic Operation Panel 205

11.2 PC Connection Kit 205

11.3 Micro Memory Card (MMC) 206

A Appendix 207

A.1 Electromagnetic Compatibility 207

A.2 Definition of the EMC Environment and Categories 208

A.3 EMC Overall Performance 209

A.4 Acceptance Log 212
A.4.1 Documentation of acceptance test 212
A.4.2 Function test of the acceptance test 215
A.4.3 Completing the acceptance log 218

B List of abbreviations 221

B.1 Abbreviations 221

Index 227

Introduction 1

1.1 Documents for the Inverter

Available technical documentation

Comprehensive information and support tools are available from the Service and Support internet site

- http://support.automation.siemens.com

You find there the following types of documentation:

- Getting Started
- Operating Instructions
- Hardware Installation Manual
- Function Manual
- Parameter Manual
- Product Information

Further internet addresses

You can download the respective documents for your inverter under the following links:

- SINAMICS G110
  http://support.automation.siemens.com/WW/view/en/13740464/13740464
- SINAMICS G120
  http://support.automation.siemens.com/WW/view/en/22339653/133300
- SINAMICS G120D
  http://www.siemens.com/sinamics-g120d
- SIMATIC ET 200S FC
  http://support.automation.siemens.com/WW/view/en/18698679/133300
- SIMATIC ET 200pro FC
  http://support.automation.siemens.com/WW/view/en/24622073/133300

Application examples

You find various application examples to the inverters under the following link:

- http://support.automation.siemens.com/WW/view/en/20208582/136000

1.2 Description of Document Classes

Description of the documents

The following section describes the available document types for your inverter:

Brochure

The Brochure is advertising literature designed to introduce the product to the marketplace. It contains a basic outline of the product with a brief overview of the technical capabilities of the product.

Catalog

The Catalog presents information that allows the customer to select an appropriate inverter including all available options. It contains detailed technical specifications, ordering and pricing information to allow the customer to order the appropriate items for their application or plant.

Getting Started

The Getting Started presents warnings, dimension drawings and a brief set up information for the customer.

Operating Instructions

The Operating Instructions gives information about the features of the inverter. It gives detailed information about commissioning, control modes, system parameters, troubleshooting, technical specifications and the available options of the product.

Hardware Installation Manual

The Hardware Installation Manual gives information for the Power Modules regarding the features of the product. It gives detailed information on installation, technical specifications, dimension drawings and the available options from the product.

Function Manual

The Function Manual is a list of detailed information about the inverter's functions. It contains descriptions of the internal components, modules and gates as well as examples for usage. Moreover associated parameters and miscellaneous logic operations of the controls are given.

Parameter Manual

The Parameter Manual contains a detailed description of all the parameters that can be modified to adapt the inverter to specific applications. The Parameter Manual also contains a series of function diagrams to diagrammatically portray the nature and interoperability of the system parameters.

Safety notes

2

Safety Instructions

The following Warnings, Cautions and Notes are provided for your safety and as a means of preventing damage to the product or components in the connected machines. This section lists Warnings, Cautions and Notes, which apply generally when handling the inverter, classified as General, Transport and Storage, Commissioning, Operation, Repair and Dismantling and Disposal.

Specific Warnings, Cautions and Notes that apply to particular activities are listed at the beginning of the relevant sections in this manual and are repeated or supplemented at critical points throughout these sections.

Please read the information carefully, since it is provided for your personal safety and will also help prolong the service life of your inverter and the equipment to which it is connected.

General

⚠ WARNING

This equipment contains dangerous voltages and controls potentially dangerous rotating mechanical parts. Non-compliance with the warnings or failure to follow the instructions contained in this manual can result in loss of life, severe personal injury or serious damage to property.

Protection in case of direct contact by means of SELV / PELV is only permissible in areas with equipotential bonding and in dry indoor rooms. If these conditions are not fulfilled, other protective measures against electric shock must be applied e.g. protective insulation.

Only suitably qualified personnel should work on this equipment, and only after becoming familiar with all safety notices, installation, operation and maintenance procedures contained in this manual. The successful and safe operation of this equipment is dependent upon its proper handling, installation, operation and maintenance.

As the earth leakage for this product can be greater than 3.5 mA a.c., a fixed earth connection is required and the minimum size of the protective earth conductor shall comply with the local safety regulations for high leakage current equipment.

The power supply, DC and motor terminals, the brake and thermistor cables can carry dangerous voltages even if the inverter is inoperative. Wait at least five minutes to allow the unit to discharge after switching off the line supply before carrying out any installation work.

It is strictly prohibited for any mains disconnection to be performed on the motor-side of the system; any disconnection of the mains must be performed on the mains-side of the Inverter.

When connecting the line supply to the Inverter, make sure that the terminal case of the motor is closed.

This equipment is capable of providing internal motor overload protection according to UL508C. Refer to P0610 and P0335, i^2t is ON by default.

When changing from the ON to OFF-state of an operation if an LED or other similar display is not lit or active; this does not indicate that the unit is switched-off or powered-down.

The inverter must always be grounded.

Isolate the line supply before making or changing connections to the unit.

Ensure that the inverter is configured for the correct supply voltage. The inverter must not be connected to a higher voltage supply.

Static discharges on surfaces or interfaces that are not generally accessible (e.g. terminal or connector pins) can cause malfunctions or defects. Therefore, when working with inverters or inverter components, ESD protective measures should be observed.

Take particular notice of the general and regional installation and safety regulations regarding work on dangerous voltage installations (e.g. EN 50178) as well as the relevant regulations regarding the correct use of tools and personal protective equipment (PPE).

⚠ CAUTION

Children and the general public must be prevented from accessing or approaching the equipment!

This equipment may only be used for the purpose specified by the manufacturer. Unauthorized modifications and the use of spare parts and accessories that are not sold or recommended by the manufacturer of the equipment can cause fires, electric shocks and injuries.

NOTICE

Keep this manual within easy reach of the equipment and make it available to all users.

Whenever measuring or testing has to be performed on live equipment, the regulations of Safety Code BGV A2 must be observed, in particular § 8 "Permissible Deviations when Working on Live Parts". Suitable electronic tools should be used.

Before installing and commissioning, please read these safety instructions and warnings carefully and all the warning labels attached to the equipment. Make sure that the warning labels are kept in a legible condition and replace missing or damaged labels.

Transport and storage

⚠ WARNING

Correct transport, storage as well as careful operation and maintenance are essential for the proper and safe operation of the equipment.

⚠ CAUTION

Protect the equipment against physical shocks and vibration during transport and storage. It is important that the equipment is protected from water (rainfall) and excessive temperatures.

Commissioning

⚠ WARNING

Working on the equipment by unqualified personnel or failure to comply with warnings can result in severe personal injury or serious damage to material. Only suitably qualified personnel trained in the setup, installation, commissioning and operation of the product should carry out work on the equipment.

⚠ CAUTION

Cable connection

The control cables must be laid separately from the power cables. Carry out the connections as shown in the installation section in this manual, to prevent inductive and capacitive interference from affecting the correct function of the system.

Operation

⚠ WARNING

The SINAMICS G120 inverters operate at high voltages.

When operating electrical devices, it is impossible to avoid applying hazardous voltages to certain parts of the equipment.

Emergency Stop facilities according to EN 60204, IEC 204 (VDE 0113) must remain operative in all operating modes of the control equipment. Any disengagement of the Emergency Stop facility must not lead to an uncontrolled or an undefined restart of the equipment.

Certain parameter settings may cause the SINAMICS G120 inverter to restart automatically after an input power failure, for example, the automatic restart function.

Wherever faults occurring in the control equipment can lead to substantial material damage or even grievous bodily injury (that is, potentially dangerous faults), additional external precautions must be taken or facilities provided to ensure or enforce safe operation, even when a fault occurs (e.g. independent limit switches, mechanical interlocks, etc.).

Motor parameters must be accurately configured for motor overload protection to operate correctly.

This equipment is capable of providing internal motor overload protection according to UL508C.

Only Control Units with fail-safe functions can be used as an "Emergency Stop Mechanism" (see EN 60204, section 9.2.5.4).

Repair

⚠ WARNING

Repairs on equipment may only be carried out by Siemens Service, by repair centers authorized by Siemens or by authorized personnel who are thoroughly acquainted with all the warnings and operating procedures contained in this manual.

Any defective parts or components must be replaced using parts contained in the relevant spare parts list.

Disconnect the power supply before opening the equipment for access.

Dismantling and disposal

CAUTION

The packaging of the inverter is re-usable. Retain the packaging for future use.

Easy-to-release screw and snap connectors allow you to break the unit down into its component parts. You can recycle these component parts, dispose of them in accordance with local requirements or return them to the manufacturer.

Description

3

The SINAMICS G120 range

The SINAMICS G120 inverter has been designed for the accurate and efficient control of the speed and torque for three-phase motors. The SINAMICS G120 system comprises two basic modules, the Control Unit (CU) and the Power Module (PM).

The Control Units are divided into the following:

- Standard CUs (CUs without fail-safe functions)
  - CU240E economic version of the CU240 control units (e.g. less terminals, no encoder interface)
  - CU240S standard version of the CU240 control units
  - CU240S DP like CU240S plus PROFIBUS DP interface (PROFIdrive Profile V4.1)
  - CU240S PN like CU240S plus PROFINET interface (PROFIdrive Profile V4.1)
- CUs with fail-safe functions
  - CU240S DP-F like CU240S DP plus integrated fail-safe functions
  - CU240S PN-F like CU240S PN plus integrated fail-safe functions

The Power Modules differ concerning the supply voltage and the way of realizing the motor braking function:

- PM240 Power Module with resistor braking and dc braking functions, supply voltage 3 AC 400 V
- PM250 Power Module with regenerative braking function, supply voltage 3 AC 400 V
- PM260 Power Module with regenerative braking function, supply voltage 3 AC 690 V

Control Units and Power Modules are allowed to be combined in any possible configuration. See the respective manual for specific functions and features.

This manual describes functions and features of the control units

- CU240S
- CU240S-DP
- CU240S DP-F
- CU240S PN
- CU240S PN-F

3.1 Accessories for the CU240S

The following options are available for the CU240S control units.

- BOP (Basic Operator Panel)
- PC connection kit
- MMC (Micro Memory Card)
- CU Screen termination kit

A description how to use the individual options or spare parts is part of the option package itself.

Ordering information and a brief functional description is given in the SINAMICS G120 catalog.

3.2 Features and Functions of the CU240S

Common features

- Modular inverter
- Simple to install
- Signal interconnection possible via BICO technology
- Different data sets selectable
- Fast current limiting (FCL) for trip-free operation
- Easy exchange of Power Module or Control Unit
- Rugged EMC design
- Configurable for a wide range of applications
- Status display via LEDs on the Control Unit
- High pulse frequencies for low noise motor operation
- EM brake relay driver

Features in combination with a PM240

- Built-in braking chopper for dynamic braking
- DC-link voltage controller
- Kinetic buffering

Features in combination with a PM250 or a PM260

- Regenerative capability
- Regenerative braking

Commissioning functions

- Quick commissioning
- Motor/control data calculation
- Motor data identification
- Application commissioning
- Series commissioning
- Parameter reset to the factory setting

Operating functions

- Adjustable setpoint channel
- Adjustable ramp-function generator (RFG)
- JOG mode
- Free function blocks (FFB)
- Fast free function blocks (Fast FFB)
- Positioning ramp down
- Automatic restart (WEA)
- Flying restart
- Current limiting
- Slip compensation
- Motor holding brake (MHB)
- Wobble generator

Control functions

- V/f control with different characteristics
- SLVC (Sensorless vector control mode) speed and torque
- VC (Vector control mode with encoder) speed and torque

Protective functions

- Motor protective functions
- Inverter protective functions
- Plant/system protective functions

Fail-Safe Functions (only for CU240S DP-F and CU240S PN-F)

- Safe Torque Off (STO)
- Safe Stop 1 (SS1)
- Safely-Limited Speed (SLS)
- Safe Brake Control (SBC).

The fail-safe functions can be triggered via Digital inputs (FDI0A … FDI1B) or PROFIsafe.

3.3 Layout and Block diagram

Layout characteristics of the CU240S

The figure below shows the various interfaces of the different types of Control Units.

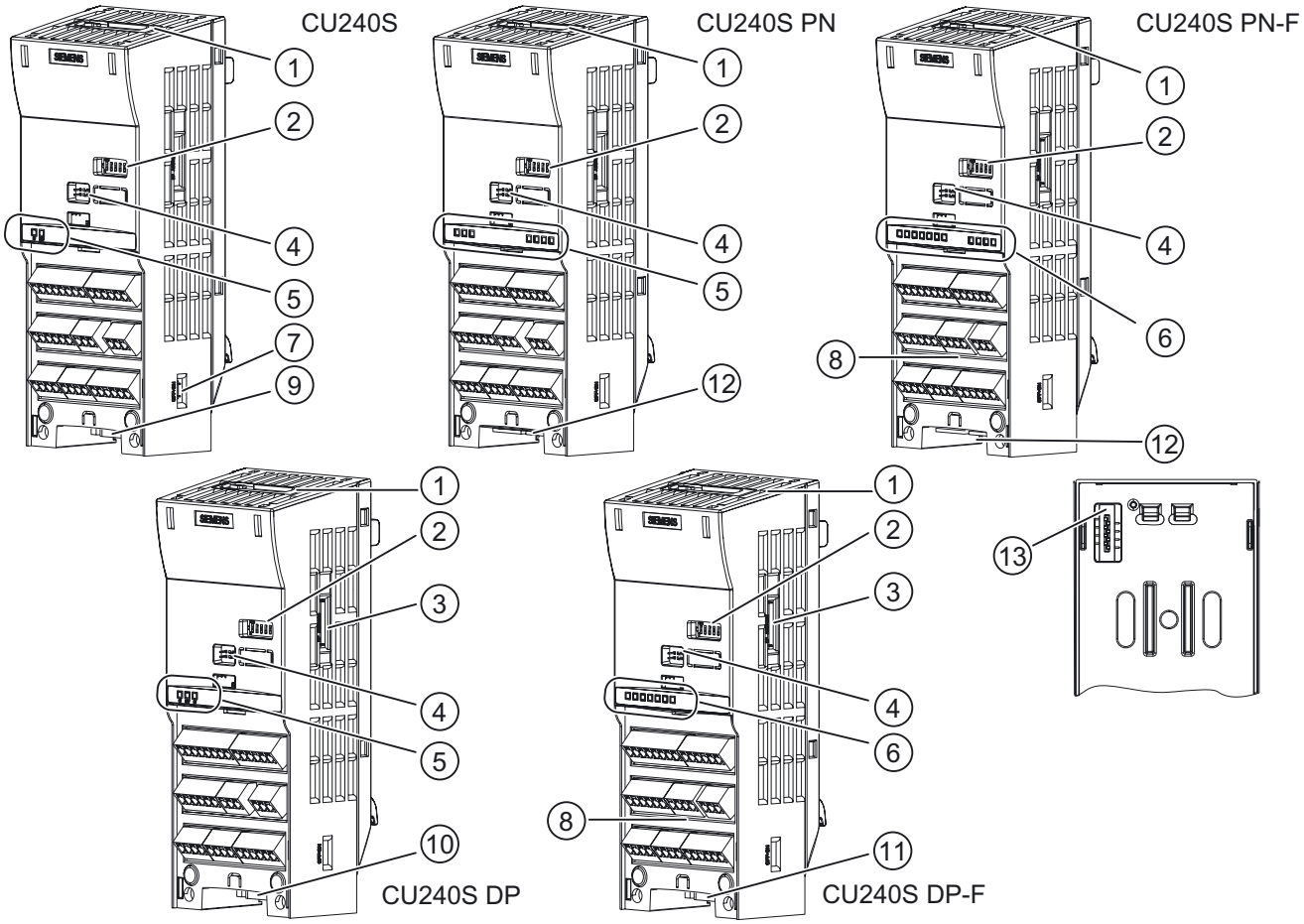

Figure 3-1 Control Units CU240S

① MMC slot
② General I/O DIP switches
③ PROFIBUS DP address DIP switches
④ Option port
⑤ Inverter status LED
⑥ Inverter status LEDs and fail-safe LEDs
⑦ Bus terminator switch
⑧ Terminals for fail-safe functions
⑨ RS485 interface via SUB-D connector
⑩ PROFIBUS DP interface via SUB-D connector
⑪ PROFIBUS DP (PROFIsafe) interface via SUB-D connector
⑫ PROFINET interface RJ45
⑬ Power Module interface

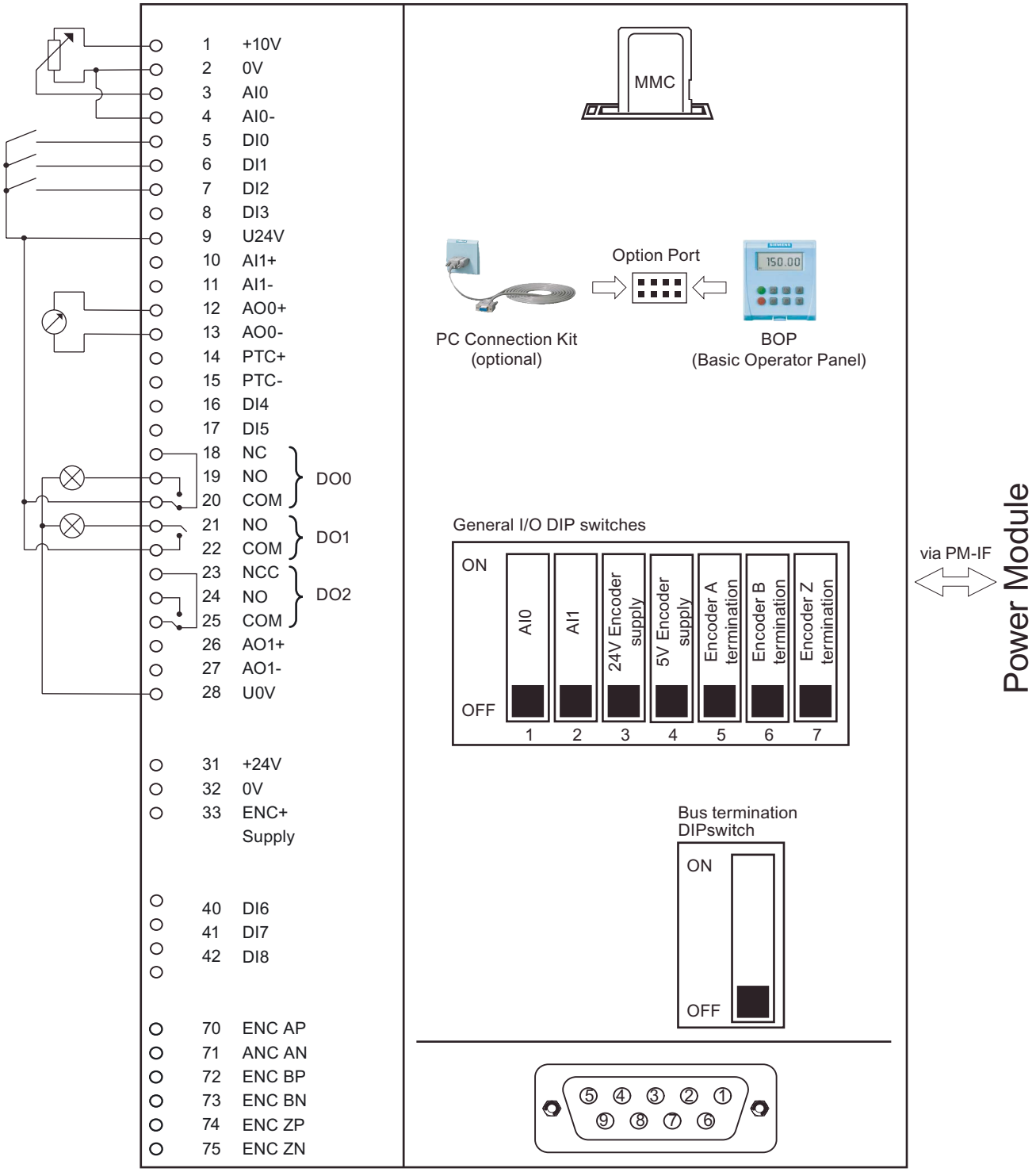

Figure 3-2 Block diagram CU240S

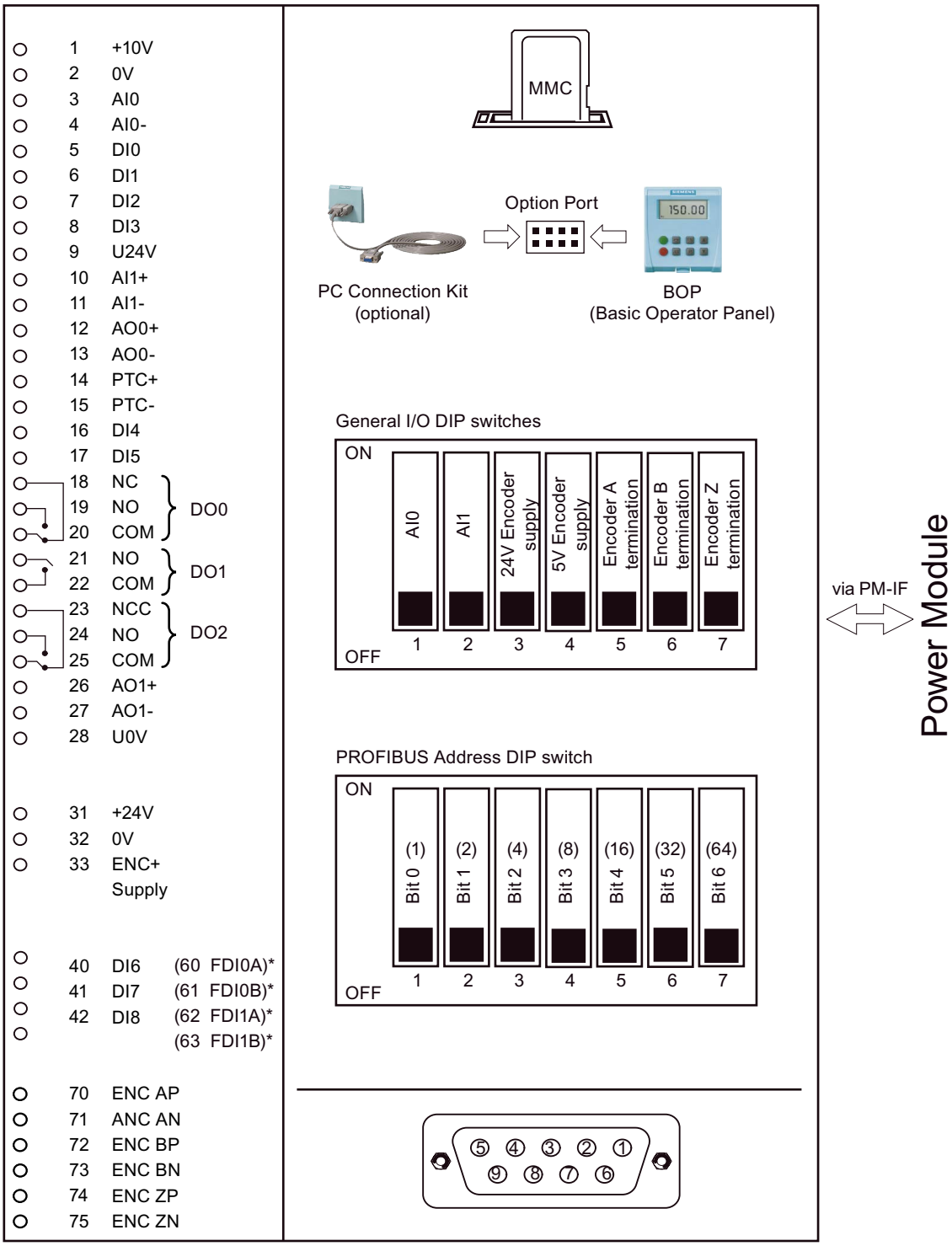

* Failsafe versions in brackets

Figure 3-3 Block diagram CU240S DP / CU240S DP-F

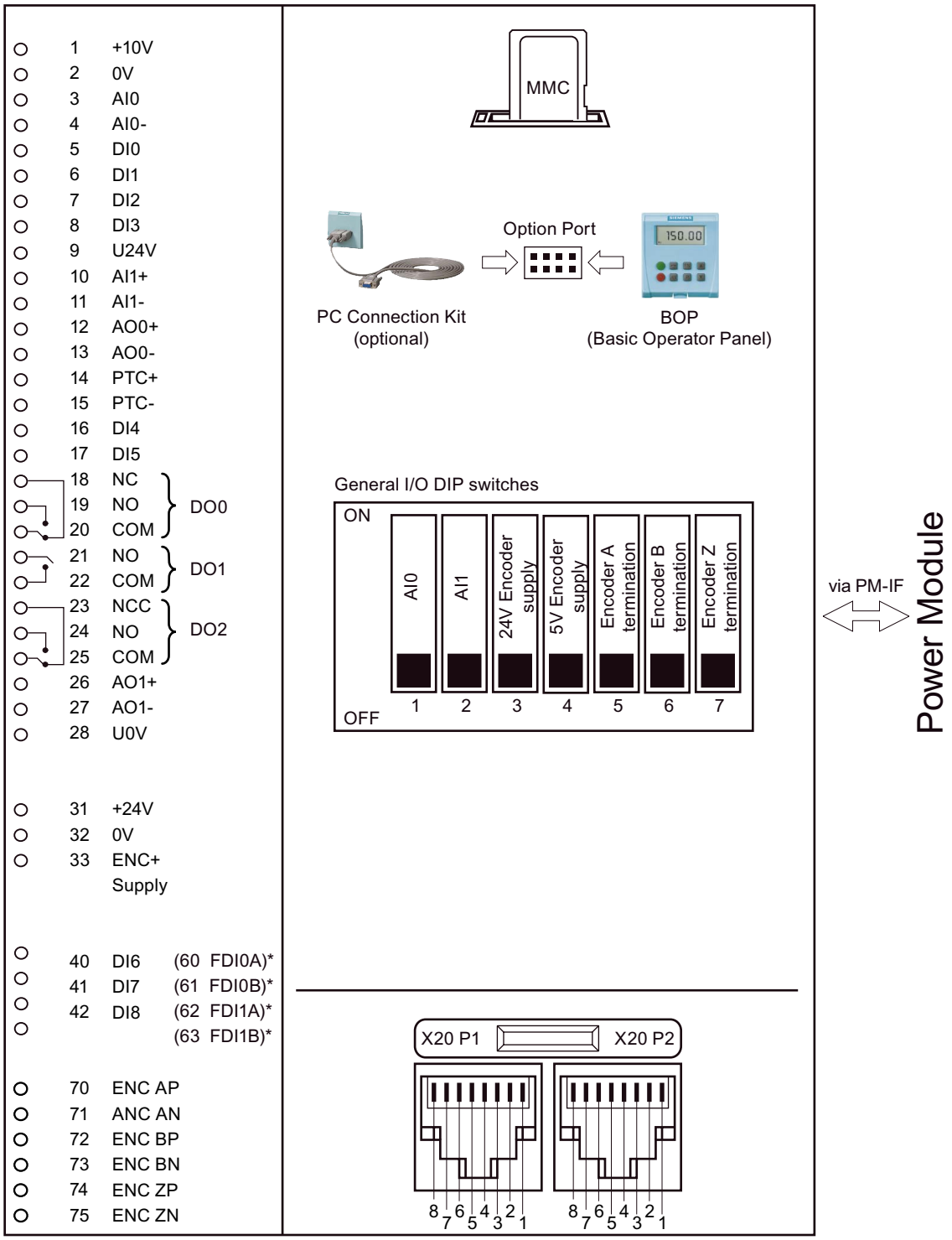

* Failsafe versions in brackets

Figure 3-4 Block diagram CU240S PN / CU240S PN-F

3.4 Interfaces of the Control Units

Overview

Table 3- 1 Interfaces of the Control Units CU240S

Control Unit	CU240S	CU240S DP	CU240S DP-F	CU240S PN	CU240S PN-F
Digital Inputs	9	9	6	9	6
Fail-safe digital Inputs	--	--	2	--	2
Digital Outputs	3	3	3	3	3
Analog Inputs	2	2	2	2	2
Analog Outputs	2	2	2	2	2
PTC/KTY84 interface	x	x	x	x	x
Encoder interface	1, TTL or HTL	1, TTL or HTL	1, TTL or HTL	1, TTL or HTL	1, TTL or HTL
Ext. 24 V	x	x	x	x	x
MMC interface / MMC slot	x	x	x	x	x
Option port	Starter or BOP interface	Starter or BOP interface	Starter or BOP interface	Starter or BOP interface	Starter or BOP interface
Bus interface	USS on RS485	PROFIBUS	PROFIBUS, PROFIsafe	PROFINET	PROFINET
	SUB-D connector	SUB-D connector	SUB-D connector	RJ45	RJ45
PROFIBUS DP DIP switches	--	x	x	--	--
General I/O DIP switches	x	x	x	x	x
Power module interface (PM-IF)	x	x	x	x	x
Terminals	x	x	x	x	x
Status LEDs	2	3	7	7	11

Terminals

Table 3- 2 Control terminals

Terminal	Designation	Function	CU240S; CU240S DP; CU240S PN	CU240S DP-F CU240S PN-F
1	+10V OUT	Non-isolated output +10 V, max. 10 mA	x	x
2	0V OUT	Supply reference (terminal 1)	x	x
3	AI0+	Analog input 0 positive	x	x
4	AI0-	Analog input 0 negative	x	x
5	DI0	Digital input 0, isolated	x	x
6	DI1	Digital input 1, isolated	x	x
7	DI2	Digital input 2, isolated	x	x
8	DI3	Digital input 3, isolated	x	x

Terminal	Designation	Function	CU240S; CU240S DP; CU240S PN	CU240S DP-F CU240S PN-F
9	U24V OUT	Isolated output +24 V – max. 100 mA	x	x
10	AI1+	Analog input 1 positive	x	x
11	AI1-	Analog input 1 negative	x	x
12	AO0+	Analog output 0 positive (0/4 mA … 20 mA, max 500 Ω, switch via P0776 to 0/2 V … 10 V min. 500 Ω)	x	x
13	AO0-	Analog output 0 negative	x	x
14	PTC+	Motor temperature sensor (PTC or KTY84-130)	x	x
15	PTC-	Motor temperature sensor (PTC or KTY84-130)	x	x
16	DI4	Digital input 4, isolated	x	x
17	DI5	Digital input 5, isolated	x	x
18	DO0, NC	Digital output relay 0. normally closed, 0.5 A, 30 V DC	x	x
19	DO0, NO	Digital output relay 0. normally open, 0.5 A, 30 V DC	x	x
20	DO0, COM	Digital output relay 0. common, 0.5 A, 30 V DC	x	x
21	DO1, NO	Digital output relay 1. normally open, 0.5 A, 30 V DC	x	x
22	DO1, COM	Digital output relay 1. common, 0.5 A, 30 V DC	x	x
23	DO2, NC	Digital output relay 2. normally closed, 0.5 A, 30 V DC	x	x
24	DO2, NO	Digital output relay 2. normally open, 0.5 A, 30 V DC	x	x
25	DO2, COM	Digital output relay 2. common, 0.5 A, 30 V DC	x	x
26	AO1+	Analog output 1 positive (0/4 mA … 20 mA, max 500 Ω)	x	x
27	AO1-	Analog output 1 negative	x	x
28	U0V OUT	Supply reference (terminal 9)	x	x
31	+24V IN	external 24 V input supply	x	x
32	0V IN	Supply reference (terminal 31)	x	x
33	ENC+ SUPPLY	Power supply for encoder (5 V or 24 V to be set by DIP switch, max. 300 mA, CU240S PN-F max. 200 mA)	x	x
40	DI6	Digital input 7, isolated	x	--
41	DI7	Digital input 8, isolated	x	--
42	DI8	Digital input 9, isolated	x	--
60	FDI0A	Fail-safe Digital Input 0A	--	x
61	FDI0B	Fail-safe Digital Input 0B	--	x
63	FDI1A	Fail-safe Digital Input 1A	--	x
64	FDI1B	Fail-safe Digital Input 1B	--	x
70	ENC AP	Channel A non-inverting input	x	x
71	ENC AN	Channel A inverting input	x	x
72	ENC BP	Channel B non-inverting input	x	x

Terminal	Designation	Function	CU240S; CU240S DP; CU240S PN	CU240S DP-F CU240S PN-F
73	ENC BN	Channel B inverting input	x	x
74	ENC ZP	Channel 0 (zero) non-inverting input	x	x
75	ENC ZN	Channel 0 (zero) inverting input	x	x

The control terminals have a maximum tighten torque of 0.25 Nm (2.2 lbf.in) and a nominal cross section of 1.5 mm^2 (AWG 14) for cable.

MMC

The MMC provides the ability to store parameter sets or firmware versions of an inverter.

It is recommended that the SINAMICS-MMC (order number: 6SL3254-0AM00-0AA0) is used for the storage and transfer of parameter sets or firmware versions.

Option port

Via the Option port a PC (using the PC Connection Kit) or a BOP is connected to the inverter. With a PC the inverter can be easily parameterized using the commissioning tool STARTER.

3.5 Factory Settings of the Control Unit

Factory settings for command and setpoint source

P0700 = 0 is the same as P0700 = 2 or 6 dependent on type of Control Unit.

Note

Setting P0700 = 6 (command source via fieldbus communication) and P1000 = 6 (setpoint source via fieldbus communication) are not possible with a CU240S.

Setting P0700 = 5 (command source via USS communication) and P1000 = 5 (setpoint source via USS communication) are not possible with a CU240S DP or a CU240S DP-F.

Table 3- 3 Functions of Digital Inputs and Digital Outputs with default settings of P0700

Function	CU240S (P0700 = 2)		CU240S DP (P0700 = 6) CU240S PN (P0700 = 6)		CU240S DP-F (P0700 = 6) CU240S PN-F (P0700 = 6)	
	Parameter	Source	Parameter	Source	Parameter	Source
ON/OFF1	P0701 = 1	DI0	r2090.00	CW1, Bit 0	r2090.00	CW1, Bit 0
Reverse	P0702 = 12	DI1	r2090.11	CW1, Bit 11	r2090.11	CW1, Bit 11
Fault acknowledge	P0703 = 9	DI2	r2090.07	CW1, Bit 7	r2090.07	CW1, Bit 7
Fixed freq. selector bit0	P0704 = 15	DI3	r2091.00	CW2, Bit 0	r2091.00	CW2, Bit 0
Fixed freq. selector bit1	P0705 = 16	DI4	r2091.01	CW2, Bit 1	r2091.01	CW2, Bit 1
Fixed freq. selector bit2	P0706 = 17	DI5	r2091.02	CW2, Bit 2	r2091.02	CW2, Bit 2
Fixed freq. selector bit3	P0707 = 18	DI6	r2091.03	CW2, Bit 3	---	---
Drive fault active	P0731 = 52.3	DO0	P0731 = 52.3	DO0	P0731 = 52.3	DO0
Drive warning active	P0732 = 52.7	DO1	P0732 = 52.7	DO1	P0732 = 52.7	DO1

Note

Digital inputs 7 and 8 and Digital output 2 are disabled per default.

Table 3- 4 Command sources and their BICO connections with default settings of P0700

Function	CU240S (P0700 = 2)		CU240S DP (P0700 = 6) CU240S DP-F (P0700 = 6) CU240S PN (P0700 = 6) CU240S PN-F (P0700 = 6)	
	Parameter	BICO source	Parameter	BICO source
ON/OFF1 / ON/OFF1	P0840 = 722.0	DI0	P0840 = 2090.0	CW1, Bit 0
ON reverse/OFF1 (not active per default)	P0842 = 0.0	---	P0842 = 0.0	---
First OFF2 source: Coast stop	P0844 = 1.0	---	P0844 = 2090.1	CW1, Bit 1
Second OFF2 source: Coast stop	P0845 = 19.1	BOP	P0845 = 19.1	BOP
First OFF3 source: Quick stop	P0848 = 1.0	---	P0848 = 2090.2	CW1, Bit 2
Second OFF3 source: Quick stop	P0849 = 1.0	---	P0849 = 1.0	---
Pulse enable	P0852 = 1.0	---	P0852 = 2090.3	CW1, Bit 3

Table 3- 5 Fixed frequency command sources and their BICO connections with default settings of P0700

Function	CU240S (P0700 = 2), CU240S DP (P0700 = 6) CU240S PN (P0700 = 6)		CU240S DP-F (P0700 = 6) CU240S PN-F (P0700 = 6)	
	Parameter	BICO source	Parameter	BICO source
Fixed freq. selection Bit 0	P1020 = 722.3	DI3	P1020 = 722.3	DI3
Fixed freq. selection Bit 1	P1021 = 722.4	DI4	P1021 = 722.4	DI4
Fixed freq. selection Bit 2	P1022 = 722.5	DI5	P1022 = 722.5	DI5
Fixed freq. selection Bit 3	P1023 = 722.6	DI6	P1023 = 0	---

Table 3- 6 Monitoring settings and their BICO connections with default settings of P0700

Function	CU240S (P0700 = 2)		CU240S DP (P0700 = 6) CU240S DP-F (P0700 = 6) CU240S PN (P0700 = 6) CU240S PN-F (P0700 = 6)	
	Parameter	BICO source	Parameter	BICO source
First source for "Fault acknowledge"	P2103 = 722.2	DI2	P2103 = 722.2	DI2
Second source for "Fault acknowledge" (not active per default)	P2104 = 0.0	---	P2104 = 2090.7	CW1, Bit 7
External fault	P2106 = 1	---	P2106 = 1	---

Table 3- 7 Factory settings for setpoint source

Source	CU240S (P0700 = 2)		CU240S DP (P0700 = 6) CU240S DP-F (P0700 = 6) CU240S PN (P0700 = 6) CU240S PN-F (P0700 = 6)	
	Parameter	BICO source	Parameter	BICO source
Frequency setpoint	r0754[0], [%]	AI0+ / AI0-	P2050.1 [Hex]	PZD from Fieldbus

Installing/Mounting

4

Installing the Control Unit

The CU controls the functions of the PM. The CU cannot be used without a PM, also the PM cannot be used without a CU.

⚠ WARNING
An inverter can be switched on unintentionally if the installation is not performed correctly. The inverter must be started-up by personnel who are qualified and trained in installing systems of this type.

4.1 Fitting the CU to the PM

Fitting the CU to the PM

The Control Unit is snapped onto the Power Module as shown in the figure below. To disconnect the CU push the release button on top of the PM.

The process of fitting the Control Unit to the Power Module is the same technique independent from the type of G120 control unit or G120 power module.

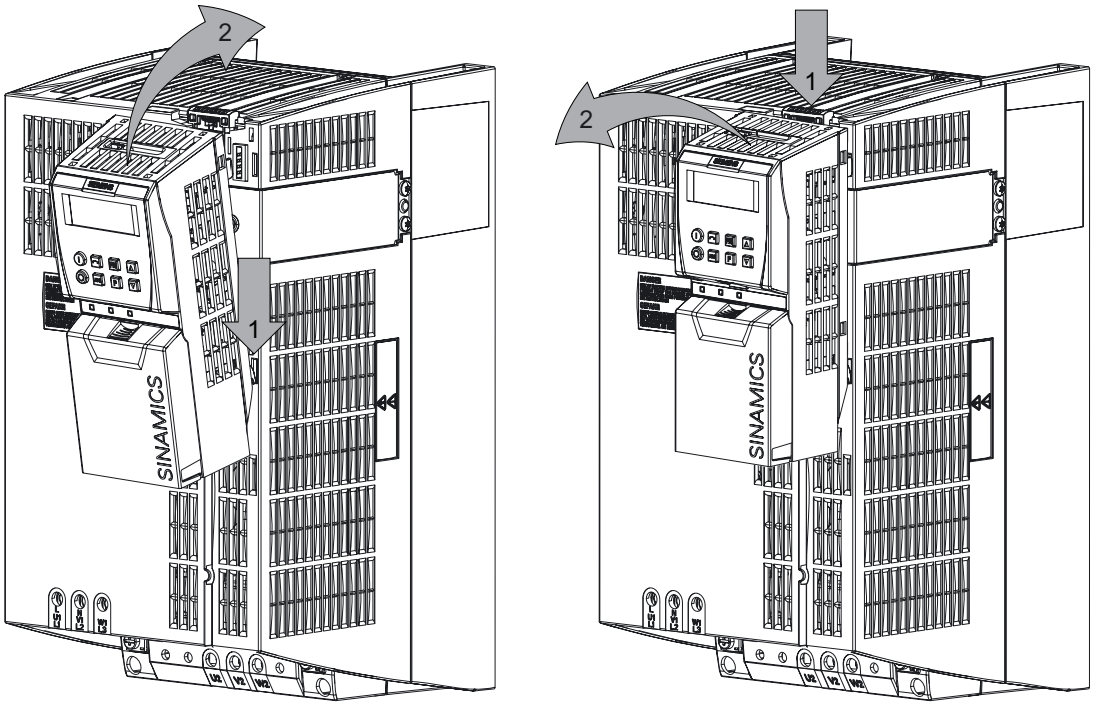

Figure 4-1 Fitting the control unit to the power module

24 V power supply

Normally the CU is supplied with 24 V from Power Module. But it is also possible to use an external DC 24 V supply (20.4 V … 28.8 V, 0.5 A). It must be connected to the Control Unit terminals 31 (+ 24 V I_n) and 32 (0 V I_n). Some reasons for using an external 24 V power supply are:

- The PROFIBUS DP interface is required to communicate with the Control Unit when the Power Module line power is not present
- Supply for 24 V encoder.

⚠ CAUTION

Care must be taken to ensure that the 24 V DC power is connected correctly or damage to the Control Unit may occur.

Max. cable length on 24 V DC power supply and I/O cables connected to CU must not exceed 10 m.

Use of unscreened cables is possible, however we recommend the use of screened cables, in order to fulfill the EMC requirements for the CE marking and fail-safe products (CU240S DP-F).

Note

If the CU is externally powered with 24 V DC but the power module is disconnected from the mains supply, the faults F00001 … F00028 are not generated.

4.2 Connecting a CU240S via Terminals

Description

To have access to the control terminals, the terminal cover must be removed, as shown in the figure below. The control terminals have a maximum tighting torque of 0.25 Nm (2.2 lbf.in) and a nominal cable cross section of 1.5 mm^2.

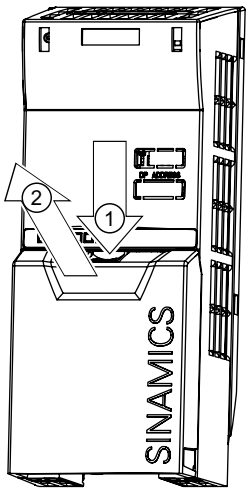

Figure 4-2 Removing the Control Unit terminal cover

The terminals of the CU240 control units are combined to terminal blocks. They can be detached from the control unit, as shown in the figure below.This allows the control units to be swapped out for another of the same type without the need for rewiring.

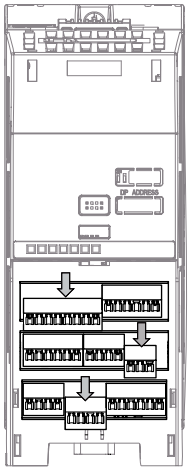

Figure 4-3 Removing the two-part connectors with a CU240S DP as example

After all the wiring of the control unit is completed - ensure that the terminal cover is replaced.

Terminal wiring examples for the Control Unit CU240S

Note

To control the CU240S DP, CU240S DP-F or CU240S PN via terminals is also possible, but in this case the parameter settings for command and setpoint source have to be changed.

In this section examples of controlling a SINAMICS G120 inverter with a CU240S via terminals are shown.

⚠ CAUTION

Use of unscreened cables is possible, however we recommend the use of screened cables in order to fulfill the EMC requirements for the CE marking and fail-safe products (CU240S DP-F).

- Control with the default settings
- Frequency setpoint and an additional setpoint via terminals (AI0 and AI1 used as voltage inputs)
- Frequency setpoint and an additional setpoint via terminals (AI0 and AI1 used as current inputs)

Control with the default settings

When shipped from the factory the G120 inverter (Control Unit and Power Module) must not be operated before the values depending on the specific PM are read into the CU.

This can be done via:

- Downloading a valid parameter set (by MMC, STARTER, or BOP)
- Quick commissioning
- A factory reset

To operate the inverter with the basic settings (e.g. after factory reset, without additional parameterization or DIP switch setting), the following conditions have to be fulfilled:

- The rated current of the inverter is at least as great as the rated current of the motor.
- The power range of the inverter matches the power range of the motor.
- The controlled motor is a 4-pole motor (best Siemens 1LA7).
- The rated motor frequency is 50 Hz, power dimension unit is kW.

Control settings

Digital and analog inputs for commands and setpoints are parameterized for a cabling as shown in the block diagram of the CU240S in the operating instructions. Furthermore the state of the inverter is monitored via digital and analog outputs.

4.2.1 Frequency setpoint via terminals

Description

As a source for both the frequency setpoint and the additional frequency setpoint the analog input terminals can be used. Depending on the customer's needs it can be used as voltage or as current inputs. By default the AI0 and AI1 are set as voltage input terminals.

AI0 and AI1 used as voltage inputs

To use it as voltage inputs the following must be performed:

1. **DIP switch settings:**

   Set the analog input DIP switches to OFF-position (default setting) (DIP switch 1 refers to AI0, DIP switch 2 refers to AI1)

2. **Paramter settings**

   Example, using analog input as bipolar voltage input (-10 V … 10 V)

Parameter	Description
P0003 = 3	**User access level*** 3: Expert: For expert use only
P1000[0] = 2	**Selection of frequency setpoint*** 2: Analog setpoint (Default setting)
Switch over from voltage to current input	
P0756[0] = 4	**Type of AI0** (P0756[1] for AI1) Sets analog input 0 (AI0) to "bipolar voltage input (-10 V … 10 V)"

The figure shows the control wiring to use the analog inputs as voltage inputs for both, frequency setpoint and an additional setpoint, using potentiometers on analog inputs AI0 and AI1.

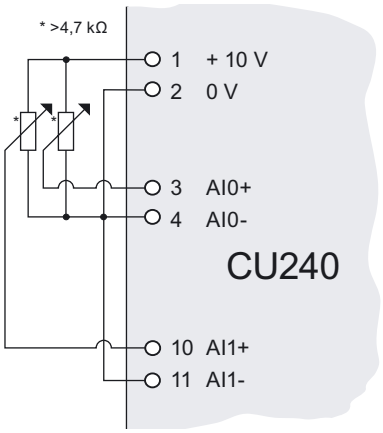

AI0 and AI1 used as current inputs

To use it as current inputs the following must be performed:

1. **DIP switch settings:**

   Set the analog input dip switches to ON-position (DIP switch 1 refers to AI0, DIP switch 2 refers to AI1)

2. **Paramter settings**

   Example, using analog input as monitored current input

Parameter	Description
P0003 = 3	**User access level*** 3: Expert: For expert use only
P1000[0] = 2	**Selection of frequency setpoint*** 2: Analog setpoint (Default setting)
Switch over from voltage to current input	
P0756[0] = 3	**Type of AI0** (P0756[1] for AI1) Sets analog input 0 (AI0) to "Unipolar current input with monitoring (0 to 20 mA)"
Scaling the analog inputs	
P0757[0] = 4	**Value x1 of AI0 scaling** (P0757[1] = for AI1) Sets analog input 0 (AI0) to a minimum of 4 mA.
P0758[0] = 0	**Value y1 of AI0 scaling** (P0758 [1] = for AI1) Sets the y scaling of the analog input at 4mA to 0 %.
P0761[0] = 4	**Width of AI0 dead band** (P0761 [1] = for AI1) Sets the dead band width of analog input 0 (AI0).

The figure shows the control wiring to use the analog inputs as current inputs for both, frequency setpoint and an additional setpoint, for example from a PLC.

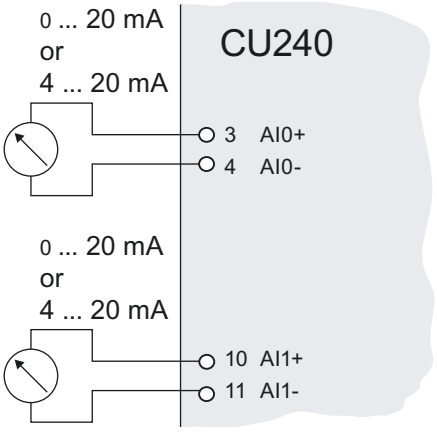

4.3 Connecting a CU240S via USS on RS485

Socket

The Control Units CU240S have a 9-pin female sub-D socket for connecting the inverter via an RS485 interface.

Table 4- 1 PIN assignment of the 9-pin sub-D socket

	Pin	Designation	Description
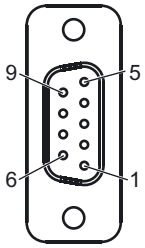	1	-	Unused
	2	-	Unused
	3	RS485P	Receive- and transmit signal (+)
	4	-	Unused
	5	0 V	Ground reference
	6	-	Unused
	7	-	Unused
	8	RS485N	Receive- and transmit signal (-)
	9	-	Unused
	X	Screen (casing)	Potential equilisation

Connector

A standard 9 pin sub-D connector can be used for USS connection via RS485.

Table 4- 2 Technical data of standard 9-pin sub-D connector for RS485

Standard 9 pin sub D connector	
PG socket	No
Max. baud rate	115200 baud
Outgoing cable unit	180°

Bus termination

The RS485 termination can be activated via switches on the housing of the SINAMICS G120.

The bus termination switch is illustrated in figure "Control Units CU 240S" in section "Layout and Block Diagram".

Cable Lengths and number of devices

Table 4- 3 Max. number of devices and max. cable length

Baudrate in bit/s	Max Number of Devices	Max Cable Length
9600	32	1200 m
19200	32	1200 m
38400	32	1200 m
57600	32	1200 m
115200 (maximum baudrate)	30	1000 m

4.4 Connecting a CU240S DP or CU240S DP-F via PROFIBUS DP

Description

The function of the PROFIBUS DP interface is to provide a PROFIBUS DP-based link between inverters of the SINAMICS G120 product range and higher-level automation systems e.g. SIMATIC S7.

4.4.1 Connecting the PROFIBUS DP

Connecting the Inverter to the PROFIBUS DP network

The inverter is to be connected to the PROFIBUS DP network via a sub-D socket on the CU240S DP or CU240S DP-F. The pins of the socket are short-circuit-proof and isolated.

Table 4- 4 PIN assignment of the 9-pin sub-D socket

	Pin	Designation	Description	Range
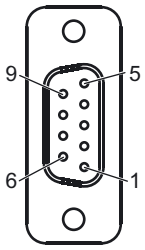	1	Shield	Ground connection	
	2	U0V	Isolated and user supply reference	
	3	RxD/TxD-P	Receive/send data P (B/B')	RS485
	4	CNTR-P	Control Signal	TTL
	5	DGND	PROFIBUS data reference potential (C/C')	
	6	VP	Supply voltage positive	5 V ± 10 %
	7	U24V	Isolated user supply +24 V @ 100 mA	
	8	RxD/TxD-N	Receive/send data N (A/A')	RS485
	9	-	Not assigned	
	Case	Cable shield	Cable shield	

External 24 V supply

If the PROFIBUS DP interface is required to communicate with the Control Unit when the Power Module mains power is not present, a 24 V supply must be connected to the Control Unit terminals 31 (+ 24 V I_n) and 32 (0 V I_n).

Maximum cable length

The PROFIBUS system can handle up to 126 stations. To run all these stations the PROFIBUS system is divided into segments. All segments have to be connected via repeater. The maximum number of stations on any segment must not exceed 32.

The maximum cable lengths are dependent on the baud rate (transmission speed). The maximum cable lengths specified in the table below can be guaranteed only with PROFIBUS bus cables (for example, Siemens PROFIBUS bus cable, order number 6XV1830-0EH10).

Table 4- 5 Permissible cable length for one segment

Baud rate	Max. cable lengths for one segment
9.6 kbaud … 187.5 kbaud	1000 m (3280 ft)*
500 kbaud	400 m (1312 ft)*
1.5 Mbaud	200 m (656 ft)*
3 Mbaud … 12 Mbaud	100 m (328 ft)*
* Repeaters can be installed to increase the length of a segment.	

Cable installation rules

During installation the bus cable must not be:

- twisted
- stretched or
- compressed.

Supplementary constraints as regards electromagnetic compatibility must also be observed.

Connectors

To connect the PROFIBUS cable to the PROFIBUS DP interface, a bus connector of one of the types described in the following table is recommended.

Table 4- 6 Recommended PROFIBUS connectors

Order Number	6GK1 500-0FC00	6GK1 500-0EA02
	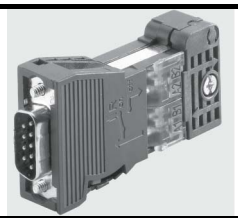	
PG socket	No	No
Max. baud rate	12 Mbaud	12 Mbaud
Terminating resistor	On/Off switch	On/Off switch
Outgoing cable unit	180°	180°
Interfaces PROFIBUS nodes PROFIBUS bus cable	 9-pin sub D socket 4 modular terminals for wires up to 1.5 mm^2	 9-pin sub D socket 4 modular terminals for wires up to 1.5 mm^2
Connectable PROFIBUS cable diameter	8 ± 0.5 mm	8 ± 0.5 mm

Note

We recommend only these two connectors since they can be used without difficulty for all SINAMICS G120 models and are completely compatible in terms of outgoing cable unit angle.

PROFIBUS terminator

Each bus segment must have a resistor network at both ends as shown in the figure below.

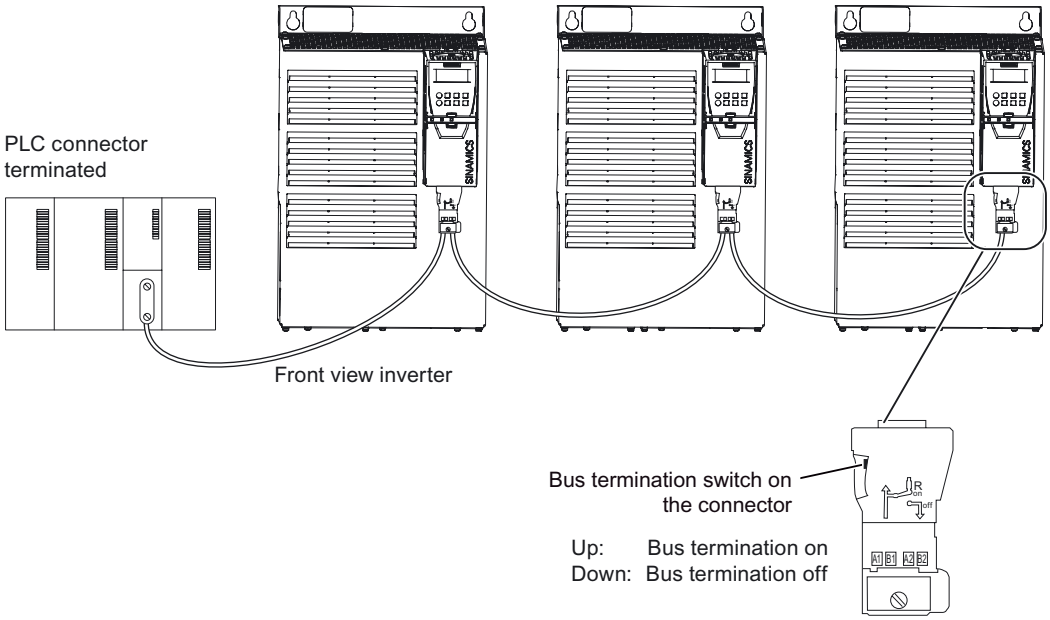

Figure 4-4 PROFIBUS network with bus termination

The bus termination resistor has to be activated via the terminator switch on the recommended PROFIBUS connector

The switches of the bus terminator provides both the 220 Ω termination and the 390 Ω biasing. The 390 Ω biasing maintains the potential difference between the signals in the PROFIBUS network cables.

⚠ WARNING
It must be ensured that any node, where the biasing components of the bus are connected, is powered at all times in which the bus is in operation.

Removing a bus connector

You can remove the bus connector with looped-through bus cable from the PROFIBUS DP interface at any time without interrupting the data exchange on the bus. Only the final node must be terminated.

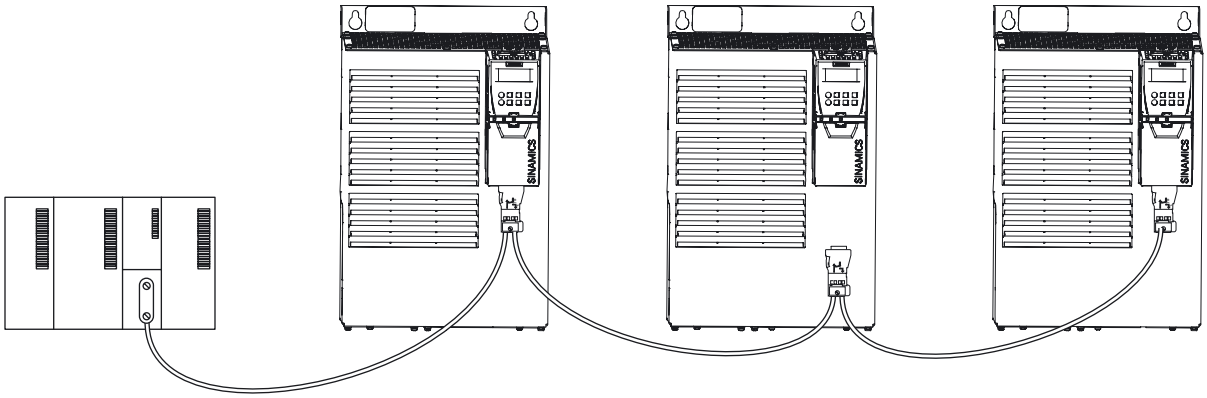

Figure 4-5 Removing a bus connector

4.4.2 Screening the bus cable and EMC precautions

Description

The following EMC-related precautions must be taken to ensure interference-free PROFIBUS DP operation.

Screening

The screen of the PROFIBUS DP cable must be connected in the bus connector. Additional screening is provided using a screen clamp on the bus cable screen which must make 360° contact with the protective earth. The solid copper core must not be scored when the insulation is removed from the core ends. You must also ensure that the screen of each bus cable is connected to protective earth at both the cabinet entry point and in the inverter housing.

Note

The bus cables must be internally twisted and screened, and installed separately from power cables with a minimum distance 20 cm (7.8 inches). The braided screen and underlying laminated foil screen (if applicable) must be connected in a 360°, positive connection at both ends, that is, the screen on the bus cable between two inverters must be connected to the inverter housing at both ends. The same applies to the screen of the bus cable between the PROFIBUS DP master and inverter.

Crossovers between bus and power cables must be laid at an angle of 90°.

Equipotential bonding

Differences in potential (for example, due to different mains supplies) between the inverters and the PROFIBUS DP master must be avoided.

- Recommended equipotential bonding cables:
  - 16 mm^2 Cu for equipotential bonding cables up to 200 m long
  - 25 mm^2 Cu for equipotential bonding cables of over 200 m long.
- Equipotential bonding cables must be routed as close as possible to signal leads; this means that the area between the bonding conductor and signal lead is as small as possible.
- Equipotential bonding cables must be contacted in a 360° connection with the earth electrode/PE conductor.

4.5 Connecting a CU240S PN via PROFINET

Socket

The Control Units CU240S PN and CU240S PN-F are equipped with a two port ethernet switch, carried out as RJ45 female sockets. Connection to optical nets is achieved by using switches with both electrical and optical ports, the drive is then connected to an electrical port. Therefore, no power supply for an external electrical/optical inverter is provided.

The assembly of the SIMATIC NET Industrial Ethernet FastConnect RF45 Plug 180 is described in the product information "Assembly Instructions for SIMATIC NET Industrial Ethernet FastConnect RJ45 Plug". For downloading this document, refer to:

http://support.automation.siemens.com/WW/view/en/23175326/130000

Table 4- 7 PIN assignment of the RJ45 female socket

	Pin	Designation	Meaning	Core color
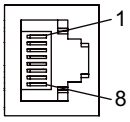	1	TX+	Transmission data +	Yellow
	2	TX	Transmission data -	Orange
	3	RX+	Receiver data +	White
	4	-		
	5	-		
	6	RX-	Receiver data -	blue

Connector

Table 4- 8 Recommended PROFINET connectors

Order Number	6GK1901-1BB10-2Ax0
	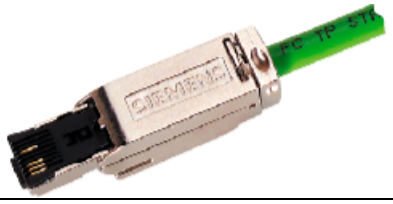
Label	Industrial Ethernet FC RJ45 Plug 180
Max. baud rate	100 Mbit/s; Cat5e
Outgoing cable unit	180°
Degree of protection	IP20
Operating temperature	-20 °C … +70 °C

Industrial Ethernet Cables and cable length

The CU240S PN provides all Ethernet-cables. As well 1:1 cables as crossover-cables can be used.

Table 4- 9 Recommended PROFINET cables

	Max. Cable Length	Order Number
Industrial Ethernet FC TP Standard Cable GP 2 x 2	100 m	6XV1840-2AH10
Industrial Ethernet FC TP Flexible Cable GP 2 x 2	85 m	6XV1870–2B
Industrial Ethernet FC Trailing Cable GP 2 x 2	85 m	6XV1870–2D
Industrial Ethernet FC Trailing Cable 2 x 2		6XV1840–3AH10
Industrial Ethernet FC Marine Cable 2 x 2	85 m	6XV1840–4AH10

Cable installation rules

Screening

The screen of the PROFINET cable must be connected with the protective earth, using a screen clamp on the PROFINET cable which must make 360° contact earth. The solid copper core must not be scored when the insulation is removed from the core ends.

Connecting the IO supervisor

You can go online with STARTER in a number of ways, which are illustrated below:

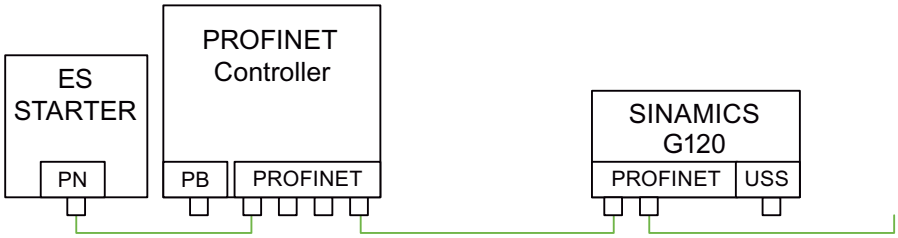

Figure 4-6 Topology 1: direct connection

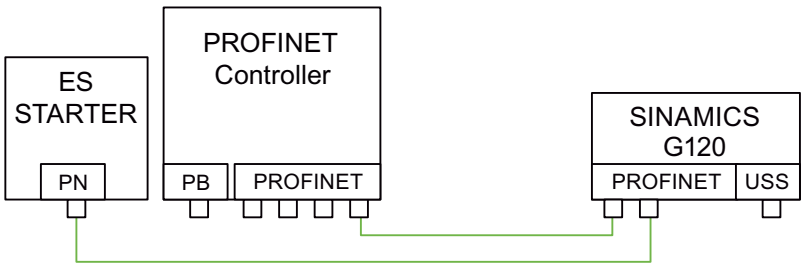

Figure 4-7 Topology 2: direct connection

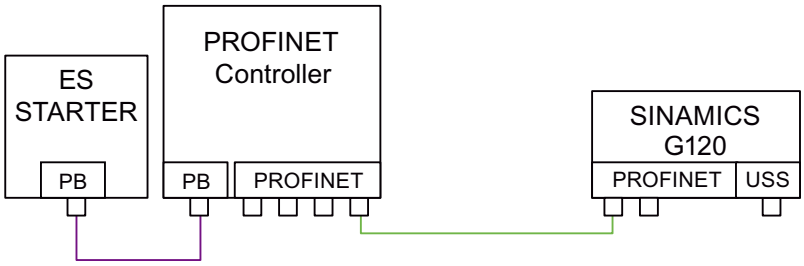

Figure 4-8 Topology 3: Routing

Note

Pay attention to the following restrictions:

- A ring-type topology is not permissible.
- SINAMICS does not support routing from PROFIBUS to PROFINET and vice versa.

See also

Assembly Instructions RJ45 Plug
(http://support.automation.siemens.com/WW/view/en/23175326/130000)

4.6 Installation Check List

Installation check list

Before power is applied to the inverter/motor system, the following checks should be performed:

	Check that:	✓
1	The environmental conditions conform to the inverter/motor specifications	
2	The inverter and the motor are securely mounted	
3	The inverter and motor are correctly installed with adequate cooling provision	
4	The motor and the application/equipment are ready to start, i.e. safe state - motor can rotate	
5	The inverter is correctly earthed/grounded	
6	The input power (supply) voltage matches the inverter's nominal input voltage	
7	The input power (mains) fuses are the correct type and installed correctly	
8	The motor connections are connected to ensure the correct direction of rotation of the motor at start-up	
9	The motor and mains connections are connected and tightened to the required specification	
10	The motor connections are not reversed - the motor will start but serious damage may occur to the connected equipment	
11	The motor cable is routed away from other cables	
12	The control connections are connected and tightened to the required specification	
13	No tools or other objects that can cause damage to the system are present	
14	The inverter is the only power source to the motor	

Commissioning

5

Overview

A G120 inverter is composed of the Power Module and the Control Unit. After snapping the Control Unit on to the Power Module for the first time, the devices must identify each other.

To indicate, that the Power Module and the Control Unit are not yet identified, F0395 is displayed. For further information to the message F0395, refer to section "Message F00395".

The G120 inverter provides two options for commissioning:

- Single commissioning

  One inverter is parameterized for commissioning with an individual parameter set. Usually, you use the STARTER or BOP for single commissioning.

- Series commissioning

  Several inverters are parameterized for commissioning via download of a complete parameter set. Usually, you use the MMC for series commissioning.

Note

We recommend commissioning via STARTER. The commissioning process using STARTER is driven by dialog boxes and will not be interpreted in this manual. This manual describes the parameter related commissioning via BOP.

Interfaces

The G120 inverter provides different communication interfaces. The following figure provides you an overview:

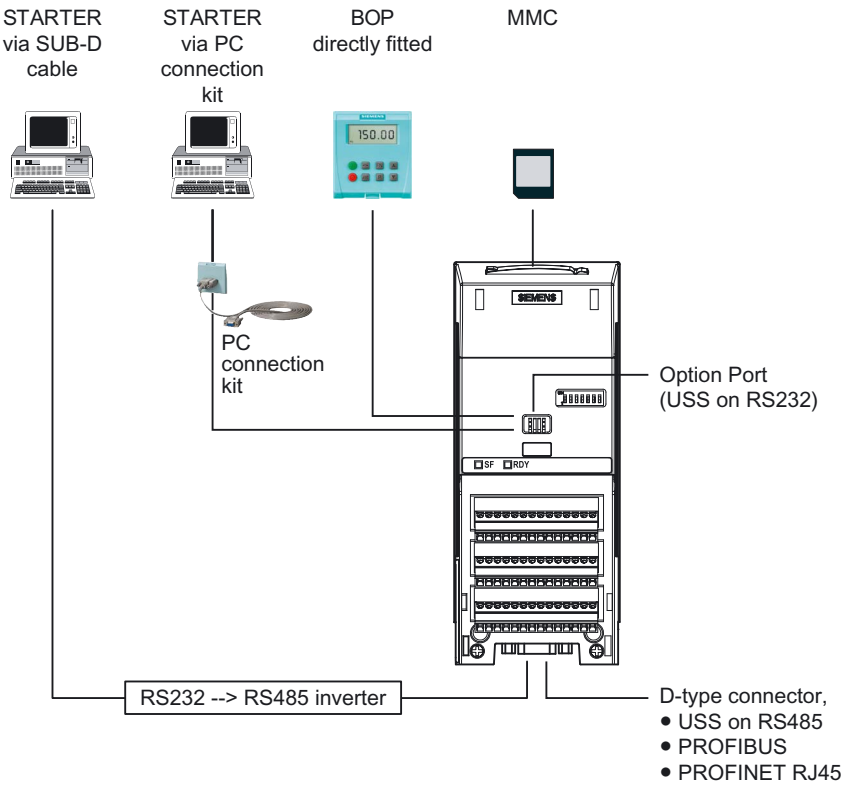

Figure 5-1 Communications interfaces

5.1 Single Commissioning

Overview

For single commissioning, you set the parameter of the inverter manually. You use BOP (Basic Operator Panel) or STARTER (Commissioning software via PC) for commissioning.

Note

We recommend commissioning via STARTER. The commissioning process using STARTER is driven by dialog boxes and will not be interpreted in this manual. This manual describes the parameter related commissioning via BOP.

Settings of commissioning

Commissioning the G120 inverter comprises different settings and kinds of single commissioning. The following list provides you an overview:

- Basic commissioning
  - Quick commissioning
  - Motor data identification
  - Speed control optimization
- Further settings for commissioning
  - Calculating the motor/control data
  - Commissioning the application
  - Reset parameters to factory settings
  - Commissioning the fail-safe functions (only in fail-safe applications)

For detailed information to the settings of single commissioning, refer to the section "Commissioning with BOP".

Factory settings

The inverter is delivered with identical factory settings for all CU240S Control Units; except the following settings:

- Command source
- Setpoint source
- Values depending on the Power Module

  The factory settings of the Power Modules are specific for the type of PM.

For details to the factory settings, refer to the Parameter Manual.

Note

After the first power on, the fault F0395 will appear. This means, no commission is until now implemented. After confirming the message, you can proceed commissioning.

5.2 Series Commissioning

5.2.1 Common Information to Series commissioning

Description

Series commissioning means transferring the parameter set from one inverter into a number of other inverters. This provides fast commissioning for identical applications, e. g. series machines or group inverters.

Components for series commissioning

Commissioning the G120 inverter can be done in different ways. The following list provides you an overview:

- Series commissioning with MMC
- Series commissioning with BOP
- Series commissioning with STARTER

For detailed information to series commissioning, refer to the chapters "Commissioning with BOP", Commissioning with MMC", and "Commissioning with STARTER".

Order of series commissioning

The series commissioning is divided into the following steps:

- Creating a valid parameter set
- Uploading this parameter set
- Downloading of the uploaded parameter set into the next inverter

An appropriate parameter set can be created by parameterizing an inverter via BOP or STARTER.

⚠ CAUTION

Parameter download between different types of Control Units and of different firmware versions is not recommended.

It is possible to download parameter sets from different Control Unit types, however, as the parameter sets might differ, the user is fully responsible for the consistency of the downloaded parameter set.

Therefore, the customer has to confirm his responsibility in case of an automatic download by acknowledging F0395.

During download of a parameter set from an MMC to the EEPROM of the Control Unit CU240S (e.g. during serial commissioning) you have to note that the LEDs are flashing correctly. If the Control Unit CU240S is in a fault state, the LEDs indicate this fault state with higher priority than the download. It is not sure that the parameter set is downloaded correctly.

⚠ WARNING

For series commissioning, all of the communication interfaces as well as also the digital and analog interfaces are re-initialized. This results in a brief communications failure or causes the digital outputs to switch.

Potentially hazardous loads must be carefully secured before starting a series commissioning.

Potentially hazardous loads can be secured as follows before starting series commissioning:

- Lower the load to the floor, or
- Clamp the load using the motor holding brake.

Note

Upload

Before the upload starts, the parameters will be copied from RAM to EEPROM

Manual and automatic download

With a manual download all necessary parameters excluding the fail-safe parameters (only with CUs with fail-safe functions) are downloaded into the inverter. How to perform a manual download is described in the following section.

With an automatic download even the fail-safe parameters are downloaded into the inverter.

An automatic download can only be performed with an MMC.

An automatic download can be performed at Start-up or by swapping an inverter component (CU or PM), details are described in the following sections and in the chapter "Operation" of this manual.

Note

Restrictions to be considered when performing upload and download:

- Only the parameter set stored in the EEPROM of the inverter is uploaded.
- Fail-safe parameters cannot be uploaded via BOP or STARTER.
- Once the upload or download procedure has started, it should not be interrupted.
- Parameter download from a standard CUs to a CUs with fail-safe functions and vice versa is not possible.
- During the up or download all LEDs are flashing (the "BF" LED is not relevant). After finishing that process successfully the "RDY" LED is on.
- During the upload process any data already held by the BOP is overwritten.
- If the download fails, the inverter will not function correctly and the "SF" LED (red) is on.
  - Possible fault messages in case of download failure with BOP
    F0051, F0055, F0056, F0057 or F0058
  - Possible fault messages in case of download failure with MMC
    F0051, F0061, F0062 or F0063

NOTICE
After upload and download of parameters between differing Control Units, the parameter settings must be checked. Parameter download from a different CU might fail with F0063 if parameters cannot be downloaded (Check P949 for the (first) parameter number which cannot be downloaded). If F0061 or F0063 occurs during startup it cannot be cleard except via a power cycle.

5.2.2 Upload and Download of Parameter Sets

Upload of parameter sets

With an upload, a parameter set can be saved in one of the following devices:

- PC (via STARTER)
- MMC
- BOP

Note

The file format for the MMC is FAT. Any other format, such as FAT32 or NTFS are not compatible with uploading and downloading parameter sets from the inverter.

Formatting can be accomplished using the DOS command line as follows:

C:\>format volume /FS:FAT - where volume has to be replaced by the name of the MMC drive, for example A.

Please keep in mind that formatting will delete all the contents of the MMC.

An upload can be triggered via

- Communication interface
- BOP
- STARTER

A detailed description is given in "Series Commissioning" in the commissioning section.

Download of parameter sets

In the case of a parameter download it is important to distinguish between the following possibilities:

- Manual download
- Automatic download.

⚠ CAUTION

Parameter download between different types of control units and of different firmware versions is not recommended.

Basically, it is possible to download parameter sets off different CU types, however, as the parameter sets might differ, the user is fully responsible for the consistency of the downloaded parameter set.

Therefore, the user has to take the responsibility in case of an automatic download by acknowledging F0395.

During download of a parameter set from a MMC to the EEPROM of the Control Unit CU240S (e.g. during serial commissioning) you have to note that the LEDs are flashing correctly. If the Control Unit CU240S is in a fault state, the LEDs indicate this fault state with higher priority than the download. It is not sure that the parameter set is downloaded correctly.

Manual download

A manual download can be performed similar to an upload via

- PC (STARTER)
- MMC
- BOP

It can be triggered like upload via

- Communication interface
- BOP
- STARTER

With a manual download a parameter set without the fail-safe parameters is downloaded from one of the above mentioned devices into the inverter.

The manual download depends as follows on the settings of P8458.

Table 5- 1 P8458 settings after a manual parameter download

P8458 setting in CU EEPROM	P8458 setting on download device	P8458 setting after download	Remark
0	0	0	---
0	1	1	---
0	2	2	---
1	0	0	---
1	1	1	---
1	2	2	---
2	0	0	---
2	1	1	---
2	2	2	---

A detailed description is given in "Series Commissioning" in the commissioning section.

Automatic download

An automatic download needs a MMC to be performed. It is not possible to perform an automatic download from a PC or from the BOP.

The automatic download runs as follows according to the settings in P8458 after power cycle or a after a swap (see "Start-up behavior" in this section).

Table 5- 2 P8458 settings after an automatic parameter download from MMC

P8458 setting in CU EEPROM	P8458 setting on MMC	P8458 setting after start-up	Remark
0	0	0	Only possible in case of swap
0	1	0	
0	2	2	
1	0	0	---
1	1	0	---
1	2	2	---
2	0	0	---
2	1	0	---
2	2	2	---

Contrary to a manual download even the fail-safe parameters are downloaded with an automatic download.

Note

Manual and automatic download

With a manual download all necessary parameters excluding the fail-safe parameters (only with Cus with fail-safe functions) are downloaded into the inverter. A detailed description is given in "Series Commissioning" in the commissioning section.

With an automatic download even the fail-safe parameters are downloaded into the inverter. An automatic download can only be performed with an MMC at Start-up or by swapping an inverter component (CU or PM). A detailed description is given in "Start-up behavior" of this section.

5.3 Common Commissioning Information

Prerequisites

Before commissioning is started, the following data must be available:

- Line supply frequency
- Motor rating plate data
- Command/setpoint sources
- Min./max. frequency or ramp-up/ramp-down time
- Control mode

An example for a rating plate is shown in the figure below. The precise definition and explanation of this data is defined in DIN EN 60034-1.

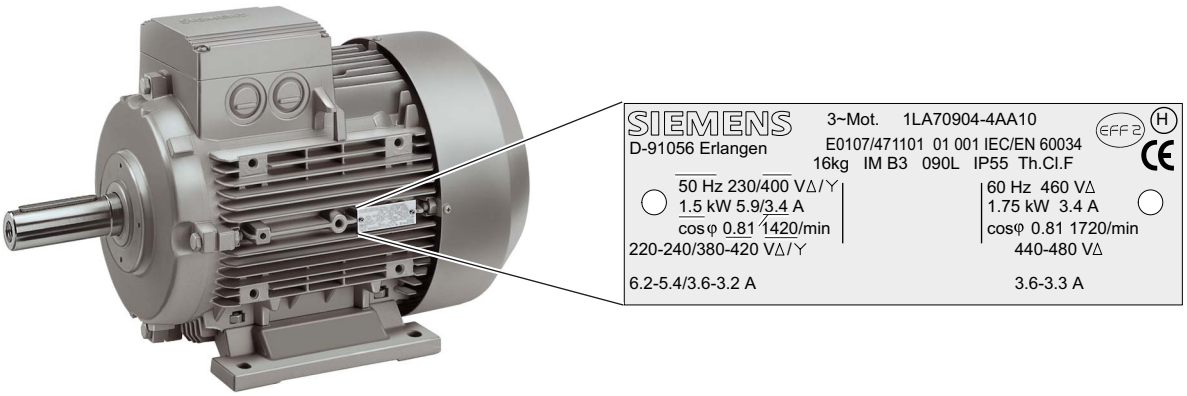

Figure 5-2 Example of a typical motor rating plate

Note

If the inverter is to be commissioned from a defined state, it can be reset to its default settings by performing a factory reset (see section "Reset Parameters to Factory Settings")

NOTICE

Parameters can be changed independent whether an MMC is plugged in or not. Depending on the settings in P8458 after power cycle the parameters from EEPROM or MMC are used for start up. The customer has to take care that the parameter set used for start-up is valid (see also "Start-Up Behavior").

⚠ WARNING

In case of automatic parameter download from the MMC at start up, F0395 will be generated. Clearing F00395 is described in the section "Message F00395" of this manual.

5.4 Message F00395

Description

The message F00395 is displayed to prompt the user to check the parameter set or to perform basic commissioning. By confirming F00395 the user accepts responsibility for setting the parameters correctly. In the case of fail-safe CUs an acceptance test must be performed.

Note

Acceptance test

An acceptance test means to check and record the inverter functions in accordance with the "acceptancce log" section in the appendix of this manual.

Cases which require F00395 to be confirmed:

- First power ON
- Automatic download
- Swap of the Control Unit

Note

F00395 does not indicate an inverter fault.

Confirming F00395

F00395 can be confirmed using one of the following methods:

- To accept the current parameter set and save it from RAM to EEPROM one of the following can be done:
  - Press FN function key on the BOP
  - Quit via digital input or PLC signal (depends on the settings of P0700)
- To not accept the current parameter set one of the following ways can be used:
  - Factory reset
  - Setting P7844 = 2 (only possible in case of an automatic MMC download at startup) automatic MMC download will be undone (EEPROM data saved in RAM).

Note

F00395 cannot be acknowledged by using power-cycling.

Confirming F00395 on fail-safe CUs

For CUs with fail-safe functions, it is necessary to do an acceptance test after confirming F00395. For details of the acceptance test refer to the "Commissioning the Fail-Safe functions" section in this manual.

5.5 Commissioning using the BOP

5.5.1 The Basic Operator Panel (BOP)

The Basic Operator Panel (BOP) is used for effective parameterizing and control of the inverter. The control signals and speed reference can easily be set by pressing the appropriate buttons. The BOP has the ability to upload and download parameter sets from an inverter to another inverter.

Basic Operator Panel (BOP), 6SL3255-0AA00-4BA1

Fitting the BOP to the Control Unit

The BOP is fitted to the Control Unit as shown in the figure below. No matter which type of Control Unit is being used, the process is the same.

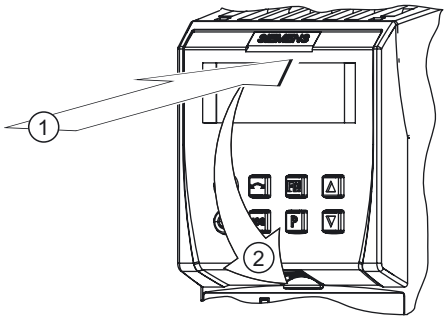

Fitting the BOP to the CU

5.5.1.1 Function Keys of the BOP

Basic Operator Panel - function keys

Table 5- 3 BOP keys and their functions

Basic Operator Panel Key	Function	Effects	
r0000	Status display	The LCD indicates the settings which the drive inverter is presently using. The display reports faults and alarms.	
I (Green)	Start motor	The inverter is started by pressing the key. This key is deactivated in the default setting. Parameter P0700 should be changed as follows to activate the key: BOP: P0700 = 1	
O (Red)	Stop motor	OFF1	When this key is pressed, the motor comes to a standstill within the selected ramp-down time. It is deactivated in the default setting; to activate → refer to the "Start motor" key.
		OFF2	The motor coasts down to a standstill by pressing the key twice (or pressing once for a longer period of time). This function is always activated.
	Direction reversal	To reverse the direction of rotation of the motor, press this key. The opposing direction is displayed using the minus character (-) or by the flashing decimal point. In the default setting this function is deactivated. To activate it → refer to the "Start motor" key.	
JOG	Jog motor	In the "Ready to run" state, when this key is pressed, the motor starts and rotates with the pre-set jog frequency. The motor stops when the key is released. When the motor is rotating, this key has no effect.	
FN	Function key	This key can be used to display additional information. If you press the key during operation, independent of the particular parameter, for two seconds, the following data will be displayed: 1. Voltage of the DC current link (designated by d – units V). 2. Output current (A) 3. Output frequency (Hz) 4. Output voltage (designated by o – units V). 5. The value, selected in P0005 (if P0005 is configured so that one of the above pieces of data is displayed (1 to 4), then the associated value is not re-displayed). The displays mentioned above are run-through one after the other by pressing again. **Step function** Pressing the FN button briefly makes the display to jump from any parameter (rXXXX or PXXXX) to r0000 and vice versa. After quitting an alarm, r0000 will be displayed and the "jumped from parameter" is forgotten. **Acknowledgement** If alarm and fault messages are present, then these can be acknowledged by pressing key FN.	
P	Parameter access	Parameters can be accessed by pressing this key.	
▲	Increase value	When this key is pressed, the displayed value is increased.	
▼	Reduce value	When this key is pressed, the displayed value is decreased.	

5.5.1.2 Changing Parameters via BOP

Changing parameter with the BOP

The description below serves as an example that shows how to change any parameter using the BOP.

Table 5- 4 Changing P0003 - parameter access level

	Step	Result on display
1	Press P to access parameters	r0000
2	Press ▲ until P0003 is displayed	P0003
3	Press P to display the parameter value	1
4	Press ▲ or ▼ to set the required value (set to 3)	3
5	Press P to confirm and store the value	P0003
6	All level 1 to level 3 parameters are now visible to the user.	

Table 5- 5 Changing P0700 an index parameter - setting BOP control

	Step	Result on display
1	Press P to access parameters	r0000
2	Press ▲ until P0700 is displayed	P0700
3	Press P to access the parameter value	0
4	Press ▲ or ▼ to select index 1	in001
5	Press P to display actual set value	0
6	Press ▲ or ▼ to the required value	1
7	Press P to confirm and store the value	P0700
8	Press ▼ until r0000 is displayed	r0000
9	Press P to return the display to the standard drive display (as defined by the customer)	

Note

The BOP sometimes displays **"bUSY"** when changing parameter values. This means that the inverter is presently handling another higher-priority task.

5.5.2 Overview Commissioning with the BOP

Commissioning overview

A differentiation is made between the following scenarios when commissioning the inverter via BOP:

Single commissioning

- Basic commissioning
  - Quick commissioning
  - Calculating the motor data,
    - automatically via Motor data identification
    - or manually via P0340
  - Speed control optimization
- Commissioning the application
- Commissioning the fail-safe functions (only in fail-safe applications)

Series commissioning

- Uploading the parameter set
- Downloading the parameter set

Reset parameters to factory settings

- Sets the parameter settings of the inverter settings back to the delivery state.

When commissioning, initially, a commissioning should be performed.

If there is no appropriate parameter set available for series commissioning, a single commissioning must be carried-out.

With the function "quick commissioning", the inverter is adapted to the motor and important technological parameters are set.

The step "commissioning the application" should only be performed, if the inverter–motor combination provides a satisfactory result.

5.5.3 Basic Commissioning

5.5.3.1 Quick Commissioning

V/f mode

For applications using V/f (P1300 = 0 [default]) or Flux Current Control (FCC) (P1300 = 1 or 6), quick commissioning can be accomplished by setting the following parameters:

Table 5- 6 Quick commissioning - V/f mode

Parameter	Description	Setting
P0003 = 3	**User access level*** 1: Standard: Allows access into most frequently used parameters (default) 2: Extended: Allows extended access e.g. to inverter I/O functions 3: Expert: For expert use only	
P0004 = 0	**Parameter filter*** 0: All parameters (default) 2: Inverter 3: Motor 4: Speed sensor	
P0010 = 1	**Commissioning parameter filter*** 0: Ready (default) 1: Quick commissioning 30: Factory setting Note: P0010 should be set to 1 in order to parameterize the data of the motor rating plate.	
P0100 = 0	**Europe/North America** (enter the motor frequency) 0: Europe [kW], frequency default, 50 Hz (default) 1: North America [hp]. frequency default, 60 Hz 2: North America [kW], frequency default, 60 Hz	
P0304 = …	**Rated motor voltage** (enter value from the motor rating plate in volts) The input of rating plate data must correspond with the wiring of the motor (star/delta). This means, if delta wiring is used for the motor, delta rating plate data has to be entered.	
P0305 = …	**Rated motor current** enter value from the motor rating plate in ampere	
P0307 = …	**Rated motor power** enter value from the motor rating plate in kW or hp Note: if P0100 = 0 or 2, data is in kW and if P0100 = 1, data is in hp.	
P0310 = …	**Rated motor frequency** enter value from the motor rating plate in Hz Pole pair number recalculated automatically if parameter is changed.	
P0311 = …	**Rated motor speed** enter value from the motor rating plate in RPM) Setting P0311 = 0 causes internal calculation of value. Note: Required for vector control and V/f control with speed controller. Slip compensation in V/f control requires rated motor speed for correct operation.	

Parameter	Description	Setting
P0700 = 2	**Selection of command source*** 0: Factory default setting 1: BOP (keypad) 2: Terminal (Default for CU240S) 4: USS on RS232 5: USS on RS485 6: Fieldbus (Default for DP and PN variants)	
P1000 = 2	**Selection of frequency setpoint*** 0: No main setpoint 1: MOP setpoint 2: Analog setpoint (Default for CU240S) 3: Fixed frequency 4: USS on RS232 5: USS on RS485 6: Fieldbus (Default for DP and PN variants) 7: Analog setpoint 2	
P1080 = …	**Minimum frequency** Enter the lowest motor frequency (in Hz) to which the motor operates independently of the frequency setpoint. The value set here is valid for both clockwise and anticlockwise rotation.	
P1082 = …	**Maximum frequency** Enter the maximum frequency (in Hz) to which the motor is limited independently of the frequency setpoint. The value set here is valid for both clockwise and anticlockwise rotation.	
P1120 = …	**Ramp-up time** Enter the time (in seconds) in which the motor should accelerate from standstill up to maximum motor frequency P1082. If the ramp-up time is set too short, this can cause alarm A0501 (current limit value) or tripping the inverter with fault F0001(overcurrent).	
P1121 = …	**Ramp-down time** Enter the time (in seconds) in which the motor should decelerate (using braking) from the maximum frequency P1082 down to standstill. If the ramp-down time is set too short, this can cause alarm A0501 (current limit value) or A0502 (overvoltage limit value) or tripping the inverter with fault F0001 (overcurrent) or F0002 (overvoltage).	
P1300 = …	**Control mode*** 0: V/f with linear characteristic (default) 1: V/f with FCC 2: V/f with parabolic characteristic 3: V/f with programmable characteristic	
P3900 = …	**End quick commissioning (QC)*** 0: No quick commissioning (no motor calculations, default) 1: Motor calculation and reset of all parameters that haven't been changed while QC process to factory setting. 2: Motor calculation and reset of all I/O settings to factory settings. 3: Only motor calculation - other parameters are not reset. Note: If P3900 = 1, 2, or 3 P0340 is set to 1 and the value from P1082 is written into P2000. The appropriate motor data will be calculated. While end of quick commissioning is performed **"bUSY"** will be displayed on the BOP. This means that the control data are being calculated and the respective parameter values are stored in the EEPROM. After quick commissioning has been completed, P3900 and P0010 will be set to 0. The actual frequency is displayed.	

Vector Control mode

For applications using Vector Control (P1300 = 20 … 23), quick commissioning should be performed as described in the following table:

Parameters designated with an "*" offer more settings than are actually shown here. Refer to the Parameter list for additional settings.

Table 5- 7 Quick commissioning - Vector Control mode

Parameter	Description	Setting
P0003 = 3	**User access level*** 1: Standard: Allows access into most frequently used parameters (default) 2: Extended: Allows extended access e.g. to inverter I/O functions 3: Expert: For expert use only	
P0004 = 0	**Parameter filter*** 0: All parameters (default) 2: Inverter 3: Motor 4: Speed sensor	
P0010 = 1	**Commissioning parameter filter*** 0: Ready (default) 1: Quick commissioning 30: Factory setting Note: P0010 should be set to 1 in order to parameterize the data of the motor rating plate.	
P0100 = 0	**Europe/North America** (enter the motor frequency) 0: Europe [kW], frequency default, 50 Hz (default) 1: North America [hp]. frequency default, 60 Hz 2: North America [kW], frequency default, 60 Hz	
P0304 = …	**Rated motor voltage** (enter value from the motor rating plate in volts) The input of rating plate data must correspond with the wiring of the motor (star/delta). This means, if delta wiring is used for the motor, delta rating plate data has to be entered.	
P0305 = …	**Rated motor current** enter value from the motor rating plate in ampere	
P0307 = …	**Rated motor power** enter value from the motor rating plate in kW or hp Note: if P0100 = 0 or 2, data is in kW and if P0100 = 1, data is in hp.	
P0310 = …	**Rated motor frequency** enter value from the motor rating plate in Hz Pole pair number recalculated automatically if parameter is changed.	
P0311 = …	**Rated motor speed** enter value from the motor rating plate in RPM) Setting P0311 = 0 causes internal calculation of value. Note: Required for vector control and V/f control with speed controller. Slip compensation in V/f control requires rated motor speed for correct operation.	
P0700 = 2	**Selection of command source*** 0: Factory default setting 1: BOP (keypad) 2: Terminal (Default for CU240S) 4: USS on RS232 5: USS on RS485 6: Fieldbus (Default for DP and PN variants)	

Parameter	Description	Setting
P1000 = 2	**Selection of frequency setpoint*** 0: No main setpoint 1: MOP setpoint 2: Analog setpoint (Default for CU240S) 3: Fixed frequency 4: USS on RS232 5: USS on RS485 6: Fieldbus (Default for DP and PN variants) 7: Analog setpoint 2	
P1080 = …	**Minimum frequency** Enter the lowest motor frequency (in Hz) to which the motor operates independently of the frequency setpoint. The value set here is valid for both clockwise and anticlockwise rotation.	
P1082 = …	**Maximum frequency** Enter the maximum frequency (in Hz) to which the motor is limited independently of the frequency setpoint. The value set here is valid for both clockwise and anticlockwise rotation.	
P1120 = …	**Ramp-up time** Enter the time (in seconds) in which the motor should accelerate from standstill up to maximum motor frequency P1082. If the ramp-up time is set too short, this can cause alarm A0501 (current limit value) or tripping the inverter with fault F0001(overcurrent).	
P1121 = …	**Ramp-down time** Enter the time (in seconds) in which the motor should decelerate (using braking) from the maximum frequency P1082 down to standstill. If the ramp-down time is set too short, this can cause alarm A0501 (current limit value) or A0502 (overvoltage limit value) or tripping the inverter with fault F0001 (overcurrent) or F0002 (overvoltage).	
P1300 = …	**Control mode*** 20: Sensorless vector control 21: Vector control with sensor 22: Sensorless vector torque-control	
P3900 = …	**End quick commissioning (QC)*** 0: No quick commissioning (no motor calculations, default) 1: Motor calculation and reset of all parameters that haven't been changed while QC process to factory setting. 2: Motor calculation and reset of all I/O settings to factory settings. 3: Only motor calculation - other parameters are not reset. Note: If P3900 = 1, 2, or 3 P0340 is set to 1 and the value from P1082 is written into P2000. The appropriate motor data will be calculated. While end of quick commissioning is performed **"bUSY"** will be displayed on the BOP. This means that the control data are being calculated and the respective parameter values are stored in the EEPROM. After quick commissioning has been completed, P3900 and P0010 will be set to 0. The actual frequency is displayed.	

NOTICE
P700 and P1000 are evaluated by the communication timeout function. Only the communication interfaces set in P700 and P1000 are monitored. P2040 (PROFIBUS), P2014 (USS) and P8840 (PROFInet).

Next to "Quick Commissioning"

Next to "Quick Commissioning" the motor data should be calculated. This can be done automatically via "Motor Data Identification" or manually via setting the parameters P0340 … P0360.

Additionally in case of vector mode (P1300 = 20/21) the "Speed Control Optimization" should be performed.

Note

"Motor Data Identification" and "Speed Control Optimization" need an ON command to start.

5.5.3.2 Calculating the Motor and Control Data

Automatic Calculation via Motor Data Identification

⚠ WARNING

The motor data identification routine MUST not be used for loads which are potentially hazardous (for example, suspended loads for crane applications). Before the motor data identification routine is started, the potentially hazardous load must be carefully secured (for example, by lowering the load to the floor or by clamping the load using the motor holding brake).

Parameter	Description
P0625 = …	**Ambient motor temperature** (entered in °C) The motor ambient temperature is entered at the instant that motor data is being determined (factory setting: **20 °C**). The difference between the motor temperature and the motor ambient temperature P0625 must lie in the tolerance range of approx. ± 5 °C.
If not the motor must be allowed to cool down.	
P0010 = 0	**Commissioning parameter filter*** Check if P0010 = 0 (Ready)
P1900 = 3	**Select motor data identification*** 0: Disabled (default) 2: Identification of all parameters in standstill. 3: Identification of all parameters in standstill including saturation curve
ON command	**Start motor data identification** Once P1900 ≠ 0, alarm A0541 is generated that states, the next ON command will initiate the motor data identification. When the ON Command is given, current flows through the motor and the rotor aligns itself. Note: When motor data identification is complete A0541 will be cleared and P1900 will be set to zero.
OFF1	In order to set the inverter into a defined state, an OFF1 command must be issued before the next step. With the OFF1 command the motor data identification is finished.

Manually Calculating the Motor and Control Data

The internal motor/control data are calculated using parameter P0340 or, indirectly using parameter P3900 or P1910. The functionality of parameter P0340 can, for example, be used if the equivalent circuit diagram data or the moment of inertia values are known. The following settings are possible for P0340:

0 No calculation
1 Complete parameterization
2 Calculation of the equivalent circuit diagram data
3 Calculation of V/f and Vector control
4 Calculation of the controller settings

For the complete parameterization (P0340 = 1), in addition to the motor and control parameters, parameters are also pre-assigned which refer to the motor rated data (for example, torque limits and reference quantities for interface signals). A complete list of all of the parameters depending on P0340 is included in the parameter manual.

Note

When exiting quick commissioning with P3900 > 0, internally P0340 is set to 1 (complete parameterization).

If the measurements of the motor data identification are completed, P0340 is internally set to 3.

Performing the calculation of motor and control data via BOP

Parameter	Description	Setting
P0340 = 1	**Calculation of motor parameters** This parameter is required during commissioning in order to optimize the operating behavior of the inverter. For the complete parameterization (P0340 = 1), in addition to the motor/control parameters, parameters are pre-assigned which refer to the rated motor data (e.g. torque limits and reference quantities for interface signals). A list of the parameters, which are calculated, depending on the setting of P0340, are included in the parameter list. 0: No calculation 1: Complete parameterization (default) 2: Calculation of equivalent circuit data 3: Calculation of V/f and Vector control 4: Calculation of controller settings only	
If additional catalog data is known enter the data in P0341, P0342 and P0344.		
P0341 = …	**Motor inertia [kg*m^2]**	
P0342 = …	**Total/motor inertia ratio**	
P0344 = …	**Motor weight** (entered in kg)	
If the ECD data is known, enter the data in P0350, P0354, P0356, P0358, P0360. **If the ECD data is not known, then: Set P0340 = 4 to calculate the controller settings and skip to END.**		
P0350 = …	**Stator resistance (line)** (entered in Ω) Stator resistance in Ω of the motor which is connected (line). This parameter value doesn't include the cable resistance.	
P0352 = …	**Cable resistance** cable resistance in Ω between inverter and motor for one phase	

Parameter	Description	Setting
P0354 = …	**Rotor resistance** (entered in Ω) Defines the rotor resistance of the motor equivalent diagram (phase value).	
P0356 = …	**Stator leakage inductance** (entered in mH) Defines the stator leakage inductance of the motor equivalent diagram (phase value).	
P0358 = …	**Rotor leakage inductance** (entered in mH) Defines the rotor leakage inductance of the motor equivalent diagram (phase value).	
P0360 = …	**Main inductance** (entered in mH) Defines the main (magnetizing) inductance of the motor equivalent diagram (phase value).	
P0340 = 3	**Calculation of motor parameters** 3: Calculation of V/f and Vector control (default) All of the parameters, dependent on the ECD data are calculated and, in addition, the controller settings (P0340 = 4).	
END	The motor parameters have been calculated and it is now possible to return to the additional parameterization in the Section "Commissioning the Application".	

5.5.3.3 Speed Control Optimization

Parameter settings

Parameter	Description
P0010 = 0	**Commissioning parameter filter*** Check if P0010 = 0 (Ready)
P1960 = 1	**Speed control optimization** 0: Disable (default) 1: Enable
ON command	**Start Speed control optimization** In case of vector mode (P1300 = 20 or 21) Speed Control Optimization is recommended. Once P1960 = 1, alarm A0542 is generated, that states, the next ON command will initiate the optimization. If there is a problem with speed control optimization due to instability the drive may trip with fault F0042, because no stable value has been obtained on the ramp up within a reasonable time. Note: When Speed control optimization is complete A0542 will be cleared and P1960 will be cleared to zero.

5.5.4 Commissioning the Application

Overview

After the motor - inverter combination has been commissioned using quick commissioning, the following parameters should be set according to the requirements of the specific application. As an example, the following points should be considered:

- Functional requirements of the inverter (for example, closed-loop process control with PID controller)
- Limit values
- Dynamic requirements
- Starting torques
- Load surge requirement
- Overload
- Diagnostics

For information to functions refer to the Function Manual.

Commissioning the application - step-by-step description

The parameters designated with an "*" offer more setting options than are listed here. Refer to the Parameter Manual for additional settings. For detailed information refer to the Function Manual.

General settings

Parameter	Description	Setting
P0003 = 3	User access level* 1: Standard: Allows access into most frequently used parameters (default) 2: Extended: Allows extended access e.g. to inverter I/O functions 3: Expert: For expert use only	
P0014 = …	Store mode 0: Volatile (RAM) (default) 1: Nonvolatile (EEPROM)	
P0210 = …	Supply voltage (enter the voltage in V) This parameter enters the real line supply voltage to which the Inverter is connected. Only necessary if P1254 = 0 (default: P1254 = 1).	
P0290 = 2	Inverter overload reaction This defines the response of the Inverter to an internal over temperature. 0: Reduce output frequency 1: Trip (F0004) 2: Reduce pulse frequency and output frequency (default) 3: Reduce pulse frequency then trip (F0004)	
P0335 = 0	Motor cooling (enter the motor cooling system) 0: Self-cooled using the shaft mounted fan attached to the motor (default) 1: Force-cooled using the separately powered cooling fan 2: Self-cooled and internal fan 3: Force-cooled and internal fan	

Note

If P0014=0 it is possible to transfer all parameter values from RAM into EEPROM via P0971. The duration of the data transfer depends on the number of changed parameters. The data transfer can last up to 3 minutes. During the data transfer, BOP displays "bUSY".

Pulse Encoder

Parameter	Description	Setting
P0400 = 0 or P0400 = …	**Select encoder type *** 0: Disabled (no encoder fitted; default) 2 or 12: Two quadrature encoder (two channels)	
P0408 = …	**Number of encoder pulses** (Only if encoder is fitted) Enter the number of encoder pulses per revolution. The number of encoder pulses per revolution P0408 is limited by the maximum pulse frequency of the pulse encoder module (f_{max} = 300 kHz)	

Temperature Sensor

Parameter	Description	Setting
P0601 = 0 or P0601 = …	**Motor temperature sensor** 0: No sensor (default;→ P0610) 1: PTC thermistor (→ P0604) 2: KTY84 (→ P0604) 4: ThermoClick sensor(→ P0604)	
P0604 = …	**Threshold motor temperature** (0 °C … 220 °C, default 130 °C) Enter the warning threshold for motor over temperature protection. The trip temperature threshold (warning threshold + 10 %) is where either the inverter is tripped or Imax is reduced (P0610).	
P0610 = 2	**Motor I2t temperature reaction** Defines the reaction when the motor temperature reaches the warning threshold. 0: No action, only a warning 1: Warning and I_{max} reduced (this results in a reduced output frequency) 2: Warning and trip (F0011) (default)	

Temperature calculation without sensor

In the vector control mode (P1300 = 20/21/22/23) Temperature calculations is possible without sensor. The following parameters have to be set.

Parameter	Description (Parameter name and factory setting (if not variable) in bold)	Setting
P0621= 1	**Motor temperature identification after restart** 0: No identification (default) 1: Temperature identification only at first "motor on" after power cycle 2: Temperature identification at each motor on.	
P0622 = …	**Motor magnetizing time for temperature identification after stator restistance identification** This parameter will be initialised with a value for one calculating cycle of the motor temperature. It depends on the identified rotor time constant. Due to accuracy reasons this calculation may be performed several times.	

Selection of command source

The available command sources depend on the used CU.

Default setting on the control unit used the command source is set per default to different values.

Parameter	Description	Setting
P0700 = 2/6	**Selection of command source** This selects the digital command source 0: Factory default setting 1: BOP (Basic Operator Panel) 2: Terminals (default) (P0701 … P0709), factory setting for CU240S 4: USS on RS232 5: USS on RS485 (not available with CU240S DP and CU240S DP-F) 6: Fieldbus (default) (P2050 … P02091), factory setting for CU240S DP and CU240S DP-F, not available with CU240S)	

Assigning digital inputs

<table>
<tr><th>Parameter</th><th colspan="3">Description</th><th>Setting</th></tr>
<tr><td>P0701 = 1</td><td>Terminal 5:
Digital Input 0 (DI0)</td><td rowspan="6">factory settings for CU240S</td><td rowspan="10">Possible values for P0701 to P0709:
0: Digital input disabled
1: ON/OFF1
2: ON reverse /OFF1
3: OFF2 - coast to standstill
4: OFF3 - quick ramp-down
9: Fault acknowledge
10: JOG right
11: JOG left
12: Reverse
13: MOP up (increase frequency)
14: MOP down (decrease frequency)
15: Fixed frequency selector bit0
16: Fixed frequency selector bit1
17: Fixed frequency selector bit2
18: Fixed frequency selector bit3
25: DC brake enable
27: Enable PID
29: External trip
33: Disable additional freq setpoint
99: Enable BICO parameterization</td><td></td></tr>
<tr><td>P0702 = 12</td><td>Terminal 6:
Digital Input 1 (DI1)</td><td></td></tr>
<tr><td>P0703 = 9</td><td>Terminal 7:
Digital Input 2 (DI2)</td><td></td></tr>
<tr><td>P0704 = 15</td><td>Terminal 8:
Digital Input 3 (DI3)</td><td></td></tr>
<tr><td>P0705 = 16</td><td>Terminal 16:
Digital Input 4 (DI4)</td><td></td></tr>
<tr><td>P0706 = 17</td><td>Terminal 17:
Digital Input 5 (DI5)</td><td></td></tr>
<tr><td>P0707 = 18</td><td>Terminal 40:
Digital Input 6 (DI6)</td><td rowspan="3">factory settings for CU240S
not availble with CU240S DP-F</td><td></td></tr>
<tr><td>P0708 = 0</td><td>Terminal 41:
Digital Input 7 (DI7)</td><td></td></tr>
<tr><td>P0709 = 0</td><td>Terminal 42:
Digital Input 8 (DI8)</td><td></td></tr>
<tr><td>P0724 = 3</td><td colspan="3">Debounce time for digital inputs
Defines the debounce time (filtering time) used for digital inputs.
0: No debounce time
1: 2.5 ms debounce time
2: 8.2 ms debounce time
3: 12.3 ms debounce time (default)</td><td></td></tr>
<tr><td>P9603 = 00</td><td colspan="2">Terminal 62, 63: SLS via FD1A and FD1B</td><td rowspan="6">not availble with CU240S and CU240S DP</td><td></td></tr>
<tr><td>P9603 = 01</td><td colspan="2">Terminal 60, 61: SLS via FD0A and FD0B</td><td></td></tr>
<tr><td>P9603 = 02</td><td colspan="2">Terminal 62, 63: SS1 via FD1A and FD1B</td><td></td></tr>
<tr><td>P9603 = 03</td><td colspan="2">Terminal 60, 61: SS1 via FD0A and FD0B</td><td></td></tr>
<tr><td>P9603 = 04</td><td colspan="2">Terminal 62, 63: STO via FD1A and FD1B</td><td></td></tr>
<tr><td>P9603 = 05</td><td colspan="2">Terminal 60, 61: STO via FD0A and FD0B</td><td></td></tr>
</table>

Assigning digital outputs

Parameter	Description	Setting
P0731 = 52:3	**BI: function of digital output 0 (DO0),** defines the source for digital output 0 Terminal 18: DO0, NC/Terminal 19: DO0, NO/Terminal 20: DO0, COM52:3 Inverter fault active (default)	
P0732 = 52:7	**BI: function of digital output 1**,defines the source for digital output 1 Terminal 21: DO1, NO/Terminal 22: DO1, COM52:7 Inverter warning active (default)	
P0733 = 0:0	**BI: function of digital output 2,** defines the source for digital output 2 Terminal 23: DO0, NC/Terminal 24: DO0, NO/Terminal 25: DO0, COM0:0 Digital output disabled (default)	
P0748	**Invert digital outputs** Bits 0, 1 and 2 can be used to invert the signals of digital outputs 0, 1 and 2	

Frequency setpoint set

Parameter	Description	Setting
P1000 = ?	**Selection of frequency setpoint** 0: No main setpoint 1: MOP setpoint (P1031 … P1040) 2: Analog setpoint (P0756 … P0762), factory setting for CU240S 3: Fixed frequency (P1001 … P1023) 6: Fieldbus (P2050 … P02091), factory setting for CU240S DP and CU240S DP-F, not available with CU240S) 7: Analog setpoint 2 10: Additional setpoint (1 = MOP) + Main setpoint (0 = No main setpoint) 11: Additional setpoint (1 = MOP) + Main setpoint (1 = MOP) 12: Additional setpoint (1 = MOP) + Main setpoint (2 = Analog setpoint) … 62: Additional setpoint (6 = Fieldbus) + Main setpoint (2 = Analog setpoint) 63: Additional setpoint (6 = Fieldbus) + Main setpoint (3 = Fixed frequency) …	

Frequency setpoint via MOP (P1000 = 1)

Parameter	Description	Setting
P1031 = 0	**Setpoint memory of the MOP** The last motorized potentiomenter setpoint, which was active before the OFF command or switching-off, can be saved. 0: MOP setpoint will not be stored (default) 1: MOP setpoint will be stored in P1040	
P1032 = 1	**Inhibit reverse direction of MOP** 0: reverse direction is allowed 1: Reverse direction inhibited (default)	
P1040 = 5	**Setpoint of the MOP** Defines the setpoint [Hz] of the motorized potentiometer (MOP).	

Frequency setpoint via analog input (AI) (P1000 = 2)

Parameter	Description	Setting
P0756 = 0	**AI type** Defines the type of the analog input and also enables analog input monitoring. 0: Unipolar voltage input (0 to +10 V) (default) 1: Unipolar voltage input with monitoring (0 V … +10 V) 2: Unipolar current input (0 mA … 20 mA) 3: Unipolar current input with monitoring (0 mA … 20 mA) 4: Bipolar voltage input (-10 V … +10 V) **NOTE**: The following applies for P0756 … P0760: Index 0: Analog input 0 (AI0), terminals 3 and 4 Index 1: Analog input 1 (AI1), terminals 10 and 11	
P0757 = 0	**Value x1 of AI scaling [V/mA]**	
P0758 = 0.0	**Value y1 of AI scaling** this parameter represents the value of x1 as a percentage of P2000 (reference frequency)	
P0759 = 10	**Value x2 of AI scaling [V/mA]**	
P0760 = 100	**Value y2 of AI scaling** This parameter represents the value of x2 as a percentage of P2000 (reference frequency)	

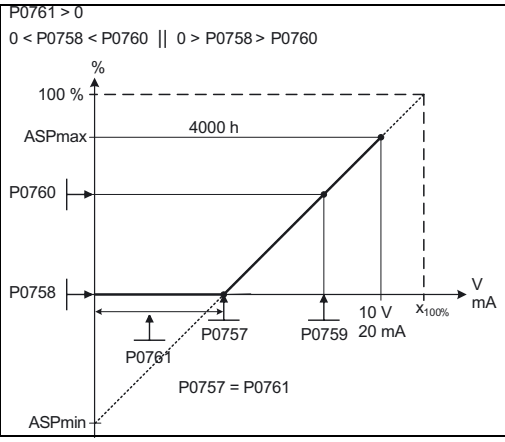

Frequency setpoint via fixed frequency (P1000 = 3)

<table>
<tr><th>Parameter</th><th>Description</th><th>Setting</th></tr>
<tr><td>P1016 = 1</td><td>Fixed frequency mode, defines the selection method for fixed frequencies.
1: direct selection (default)
2: binary coded</td><td rowspan="17">The fixed frequency can be selected via four digital inputs (default DI3 … DI6).
Fixed frequences via direct selection (P1016 = 1):
With the default settings additional combinations as follows are possible:
<table>
<tr><th>Fixed Frequency selected via</th><th>FF- Par</th><th>FF [Hz]</th></tr>
<tr><td>DI3 (P1020 =722.3)</td><td>P1001 (default = 0 Hz)</td><td>0</td></tr>
<tr><td>DI4 (P1021 =722.4)</td><td>P1002 (default = 5 Hz)</td><td>5</td></tr>
<tr><td>DI5 (P1022 =722.5)</td><td>P1003 (default = 10 Hz)</td><td>10</td></tr>
<tr><td>DI6 (P1023 =722.6)</td><td>P1004 (default = 15 Hz)</td><td>15</td></tr>
<tr><td>DI3, DI4</td><td>P1001+P1002</td><td>5</td></tr>
<tr><td>DI3, DI5</td><td>P1001+P1003</td><td>10</td></tr>
<tr><td>DI3, DI6</td><td>P1001+P1004</td><td>15</td></tr>
<tr><td>DI4, DI5</td><td>P1002+P1003</td><td>15</td></tr>
<tr><td>DI5, DI6</td><td>P1003+P1004</td><td>25</td></tr>
<tr><td>DI3, DI4, DI5</td><td>P1001+P1002+P1003</td><td>15</td></tr>
<tr><td>DI3, DI4, DI6</td><td>P1001+P1002+P1004</td><td>20</td></tr>
<tr><td>DI3, DI5, DI6</td><td>P1001+P1003+P1004</td><td>25</td></tr>
<tr><td>DI3, DI4, DI5, DI6</td><td>P1001+P1002+P1003+P1004</td><td>30</td></tr>
</table>
Fixed frequences via binary coded selection (P1016 = 2):
With binary coded selection each frequency, set in one of the parameters P1002 … P1015 can be directly selected.
<table>
<tr><th>Fixed Frequency selected via</th><th>FF-Par</th><th>FF-default setting [Hz]</th></tr>
<tr><td>DI3 (P1020 =722.3)</td><td>P1001</td><td>0</td></tr>
<tr><td>DI4 (P1021 =722.4)</td><td>P1002</td><td>5</td></tr>
<tr><td>DI5 (P1022 =722.5)</td><td>P1003</td><td>10</td></tr>
<tr><td>DI6 (P1023 =722.6)</td><td>P1004</td><td>15</td></tr>
<tr><td>DI3, DI4</td><td>P1005</td><td>20</td></tr>
<tr><td>DI4, DI5</td><td>P1006</td><td>25</td></tr>
<tr><td>DI5, DI6</td><td>P1007</td><td>30</td></tr>
<tr><td>DI3, DI5</td><td>P1008</td><td>35</td></tr>
<tr><td>DI4, DI6</td><td>P1009</td><td>40</td></tr>
<tr><td>DI3, DI6</td><td>P1010</td><td>45</td></tr>
<tr><td>DI3, DI4, DI5</td><td>P1011</td><td>50</td></tr>
<tr><td>DI4, DI5, DI6</td><td>P1012</td><td>55</td></tr>
<tr><td>DI3, DI5, DI6</td><td>P1013</td><td>60</td></tr>
<tr><td>DI3, DI4, DI6</td><td>P1014</td><td>65</td></tr>
<tr><td>DI3, DI4, DI5, DI6</td><td>P1015</td><td>65</td></tr>
</table></td><td></td></tr>
<tr><td>P1001 = 0</td><td>Fixed frequency 1, (FF1)
Value given in Hz.</td><td></td></tr>
<tr><td>P1002 = 5</td><td>Fixed frequency 2</td><td></td></tr>
<tr><td>P1003 = 10</td><td>Fixed frequency 3</td><td></td></tr>
<tr><td>P1004 = 15</td><td>Fixed frequency 4</td><td></td></tr>
<tr><td>P1005 = 20</td><td>Fixed frequency 5</td><td></td></tr>
<tr><td>P1006 = 25</td><td>Fixed frequency 6</td><td></td></tr>
<tr><td>P1007 = 30</td><td>Fixed frequency 7</td><td></td></tr>
<tr><td>P1008 = 35</td><td>Fixed frequency 8</td><td></td></tr>
<tr><td>P1009 = 40</td><td>Fixed frequency 9</td><td></td></tr>
<tr><td>P1010 = 45</td><td>Fixed frequency 10</td><td></td></tr>
<tr><td>P1011 = 50</td><td>Fixed frequency 11</td><td></td></tr>
<tr><td>P1012 = 55</td><td>Fixed frequency 12</td><td></td></tr>
<tr><td>P1013 = 60</td><td>Fixed frequency 13</td><td></td></tr>
<tr><td>P1014 = 65</td><td>Fixed frequency 14</td><td></td></tr>
<tr><td>P1015 = 65</td><td>Fixed frequency 15</td><td></td></tr>
<tr><td>P1020 = 722.3</td><td>Fixed frequency selection - Bit 0
Selects DI3 for FF selection</td><td></td></tr>
<tr><td>P1021 = 722.4</td><td>Fixed frequency selection - Bit 1
Selects DI4 for FF selection</td><td></td></tr>
<tr><td>P1022 = 722.5</td><td>Fixed frequency selection - Bit 2
Selects DI5 for FF selection</td><td></td></tr>
<tr><td>P1023 = 722.6</td><td>Fixed frequency selection - Bit 3
Selects DI6 for FF selection</td><td></td></tr>
</table>

Analog outputs

Parameter	Description	Setting
P0771 = 21	**CI: Analog output** Defines the function of the 0 mA … 20 mA analog output 21: CO: actual frequency (default; scaled according to P2000) 24: CO: actual output frequency (scaled according to P2000) 25: CO: actual output voltage (scaled according to P2001) 26: CO: actual DC-link voltage (scaled according to P2001) 27: CO: Output current (scaled according to P2002) **NOTE:** The following applies for P0771 … P0785: Index 0: analog output 0 (AO0), terminals 12 and 13 Index 1: analog output 1 (AO1), terminals 26 and 27	
P0775 = 0	**Permit absolute value** Decides if the absolute value of the analog output is used. If enabled, this parameter will take the absolute value of the value to be outputed. If the value was originally negative then the corresponding bit in r0785 is set.	
P0776 = 0	**Type of analog output** Scaling of r0774. 0: Current output (default) 1: Voltage output **NOTE:** P0776 changes over the scaling of r0774 (0 mA … 20 mA ⇔ 0 V … 10 V). Scaling parameters P0778, P0780 and the deadband are always entered in 0 mA … 20 mA. Analog output 0 can be switched to a voltage output with a range 0 … 10 V. Analog output 1 is only a current output. When it is used as voltage output, it must be terminated using a 500 Ω resistor.	
P0777 = 0.0	**Value x1 of the analog output scaling** Defines x1 output characteristic in percentage. This parameter represents the lowest analog value as a percentage of P200x (depending on the setting of P0771).	
P0778 = 0	**Value y1 of the analog output scaling** This parameter represents the value of x1 in mA.	
P0779 = 100	**Value x2 of the analog output scaling** This defines x2 of the output characteristic in percentage. This parameter represents the highest analog value as a percentage of P200x (depending on the setting of P0771).	
P0780 = 20	**Value y2 of the analog output scaling** This parameter represents the value of x2 in mA.	
P0781 = 0	**Width of analog output deadband** This sets the width of the deadband in mA for the analog output.	

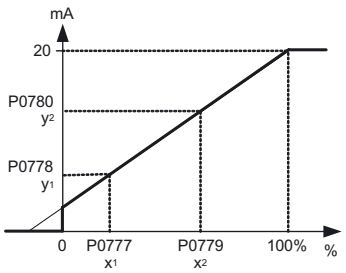

JOG frequency

Parameter	Description	Setting
P1057 = 1	**JOG Enable** P1057 = 0 JOG-function disabled P1057 = 1 JOG-function enabled (default)	
P1058 = 5	**JOG frequency right** Frequency in Hz when the motor is being jogged in the clockwise direction.	
P1059 = 5	**JOG frequency left** Frequency in Hz when the motor is being jogged in the counter-clockwise direction.	
P1060 = 45	**JOG ramp-up time** Ramp-up time in seconds from 0 to the maximum frequency (P1082). The JOG ramp-up is limited by P1058 or P1059.	
P1061 = 50	**JOG ramp-down time** Ramp-down time in seconds from the maximum frequency (P1082) to 0.	

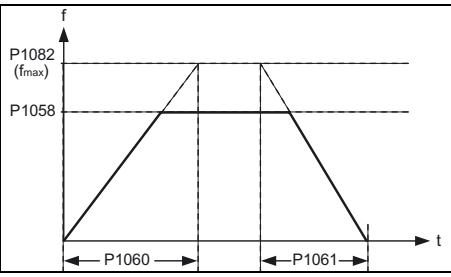

Additional Setpoints

Parameter	Description	Setting
P1074 = 1.0	**BI: disable additional setpoint**	
P1075 = 775	**CI: additional setpoint** Defines the source of the additional setpoint which is added to the main setpoint. **Common settings:** 755: Analog input setpoint 1024: Fixed frequency setpoint 1050: MOP setpoint	
P1076 = 1.0	**CI: additional setpoint scaling** Defines the source to scale the additional setpoint. **Common settings:** 1: Scaling of 1.0 (100 %)755: Analog input setpoint 1024: Fixed frequency setpoint 1050: MOP setpoint	

Skip Frequency

Parameter	Description		Setting
P1091 = 7.5	**Skip frequency 1** (entered in Hz) Avoids mechanical resonance effects and suppresses (skips) frequencies in the range around the skip frequency ± P1101 (skip frequency bandwidth).	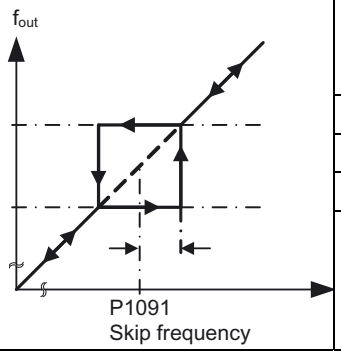	
P1092 = 0.0	**Skip frequency 2**		
P1093 = 0.0	**Skip frequency 3**		
P1094 = 0.0	**Skip frequency 4**		
P1101 = 1.0	**Skip frequency bandwidth** (entered in Hz)		

Ramp times

Parameter	Description		Setting
P1120 = 10	**Ramp-up time** Enter the acceleration time in seconds.	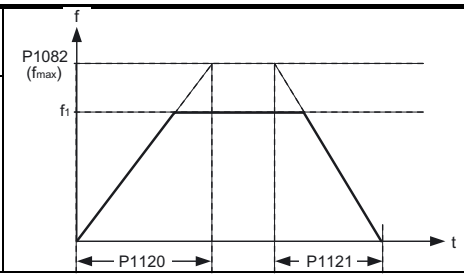	
P1121 = 10	**Ramp-down time** Enter the deceleration time in seconds.		

Rounding

Parameter	Description		Setting
P1130 = 5.0	**Ramp-up initial rounding time** (in seconds)	The rounding times are recommended, to avoid abrupt responses and so to minimize stress to the mechanical system. The ramp-up and ramp-down times are extended by the component of the rounding ramps.	
P1131 = 5.0	**Ramp-up final rounding time** (in seconds)		
P1132 = 5.0	**Ramp-down initial rounding time** (in seconds)		
P1133 = 5.0	**Ramp-down final rounding time** (in seconds)		
P1134 = 0	**Rounding type** **0: continuous smoothing** (jerk-free) 1: Discontinuous smoothing **NOTE**: for discontinuous rounding (P1134 = 1), after the setpoint is reduced or an OFF1 command, the final rounding at ramp-up (P1131) and the initial rounding at ramp-down (P1132) are not executed.		

Further parameters to set before finishing the application commissioning

The following parameters should be configured for each application.

Parameter	Description	Setting
P1800 = 4	Pulse frequency (kHz) The pulse frequency can be changed in 2 kHz steps. The range extends from 4 kHz up to 16 kHz. The complete inverter output current at 50 °C is reached with 4 kHz. The maximum output frequency depends on the pulse frequency. Operation up to 266 Hz is possible with a pulse frequency of 4 kHz. If a higher output frequency is required, then the pulse frequency should also be increased (10 kHz pulse frequency - maximum output frequency of 650 Hz) If low-noise operation is not required, then the inverter losses and the high-frequency disturbances emitted by the inverter can be reduced by selecting lower pulse frequencies.	
P2000 = 50	Reference frequency (Hz) The reference frequency in Hertz corresponds to a value of 100 %. This setting should be changed if a maximum frequency of higher than 50 Hz is required. NOTE: This scaling acts on the maximum frequency of the analog setpoints, the fixed frequencies and the motorized potentiometer. All these values refer to 100 %.	
P2001 = 1000	Reference voltage (V) The reference voltage in Volts (output voltage) corresponds to a value of 100 %. NOTE: This setting should only be changed if it is necessary to output the voltage with another scaling.	
P2002 = …	Reference current (A) The reference current in Amperes (output current) corresponds to a value of 100 %. Factory setting is 200 % of the rated motor current (P0305). NOTE: This setting should only be changed if it is necessary to output the current with another scaling.	
P2003 = …	Reference torque (Nm) The reference torque in Newton-meters corresponds to a value of 100 %. Factory setting is 200 % of the rated motor torque, determined from the motor data, for a constant motor torque. NOTE: This setting should only be changed if it is necessary to output the torque with another scaling.	
P2004 = …	Reference power (kW or hp) The reference power in kW or hp corresponds to a value of 100 %. Factory setting is 200 % of the rated motor power at constant motor torque. This setting should only be changed if it is necessary to output the power with another scaling.	

Finishing the application commissioning

Parameter	Description	Setting
P0971 = 1	Transfer data from RAM to EEPROM 0: Disabled (default) 1: Start data transfer, RAM → EEPROM All of the parameter changes are transferred from RAM (volatile) into the EEPROM (nonvolatile, settings are not lost with power off). While the transfer is active, "bUSY" is displayed on the BOP. Once the transfer is completed P0970 will be set internally to "0" and the "P0970" will be displayed. Note: Data transfer RAM → EEPROM is not necessary when the commissioning is performed via the BOP, because all parameter changes via BOP are stored as well in RAM as in EEPROM immediately.	

5.5.5 Reset Parameters to Factory Settings

Overview

With a factory reset via P0970 the initial state of the all the inverter parameters can be re-established.

The factory setting values are designated as "Factory setting" in the Parameter Manual.

For further information, refer to the section "Factory Settings of the Control Unit" in this manual.

Note

When resetting the parameters to the factory setting, the communications memory is re-initialized. This means that communications are interrupted for the time it takes to perform the reset.

⚠ WARNING

Parameter reset in case of CUs with fail-safe functions

Parameters that don't relate to fail-safe functions are reset with P0970 = 1.

To reset parameters that relate to fail-safe functions an additional parameter reset with P0970 = 10 must be performed. This parameter reset is password protected.

In case of a parameter reset with P0970 = 10 an acceptance test necessary.

Reset to the factory setting

Parameter or action	Description
P0003 = 1	**User access level*** 1: Standard: Allows access into most frequently used parameters.
P0004 = 0	**Parameter filter** 0: All parameters
P0010 = 30	**Commissioning parameter*** 30: Factory setting, parameter transfer
P0970 = 1	**Factory reset*** 1: Parameter reset to the default values
BUSY (on BOP) Progress bar (STARTER)	When the factory reset has been finished, P0970 and P0010 are set to 0 and the BOP changes back to the standard display.

Note

The following parameters will not be changed with a factory reset:

- P0014 Store mode
- P0100 Europe / North America
- P0201 power stack code number
- P8458 clone control
- Communication parameters
- Data depending on actual Power Module

5.5.6 Commissioning the Fail-Safe Functions

Available fail-safe functions

- Safe Torque Off (STO)
- Safe Stop 1 (SS1)
- Safely Limited Speed (SLS)

Command source for fail-safe functions

As command source for the fail-safe signals STO, SS1 and SLS the fail-safe terminals (60 … 63) and PROFIsafe can be used (see p9603 and p9803) simultaneously.

⚠ WARNING

PROFIsafe address

To run PROFIsafe, the PROFIsafe address (P9810) must be set first. The default setting (P9810 = 0) is an invalid address.

The PROFIsafe address must be changed in P9810 and in the higher level control system (for example, HW Config in SIMATIC S7) otherwise fault F1640 will occur.

Note

Via terminals two of the three fail-safe functions (STO, SS1 and SLS) can be used. Via PROFIsafe all three functions are available.

Commissioning parameters regarding fail-safe functions

Parameters regarding fail-safe functions can only be accessed on a Control Unit with fail-safe functions, on a Standard CU this parameters are not available. For safety reasons parameters are handled by pairs and stored on two separate processors (P1 and P2) within the CU with fail-safe functions.

When commissioning of fail-safe functions is completed, checksums for each processor data are created. These checksums are permanently compared. If they differ, the inverter initiates a latched safe torque off (LSTO) state and stops the system.

Access to fail-safe parameters

The access level of the fail-safe function parameters is 3, therefore set P0003 = 3, when using a BOP.

To enter the commissioning mode for fail-safe functions set parameter P0010 = 95.

When the safety commissioning mode is initiated a password must be set in parameter P9761. The default password for the system is 12345, it is highly recommended that this password is changed to ensure complete security of the fail-safe function parameters. More detailed description of this process is given in the following flow charts.

The commissioning process of fail-safe functions would normally be accomplished with the use of either the STARTER software or the optional Basic Operator Panel (BOP).

When changing fail-safe settings, the parameters for both processors (e.g. 9603 and 9803) must be changed, otherwise a checksum error will occur.

Example: To select SLS, SS1 and STO via PROFIsafe communication and in parallel SLS via FDI0 and STO via FDI1 the following has to be set:

- P9603.1 = P9803.1 = 1 (SLS via FDI0)
- P9603.4 = P9803.4 = 1 (STO via FDI1)
- P9603.7 = P9803.7 = 1 (SLS, SS1 and STO via PROFIsafe)

Once both write actions have been verified by the system, a checksum is created. When commissioning has been completed, a checksum for all the data held in both memories is created and continually checked to verify the integrity of the data.

Completing the commissíoning of fail-safe functions

To complete commissioning of fail-safe functions use setting P3900 = 10, which accepts all the changes to the fail-safe parameters. All values stored on both processors are checked and if no discrepancies are found the inverter state will change from "safety commissioning" to "ready".

If, however, a discrepancy is found safety commissioning can not be finished. The fault number will be shown in r0947. In this case interrupt the safety commissioning with P3900 = 11 to reload to the former stored settings. To reset all fail-safe parameters to their default values perform a factory reset of fail-safe parameters with P0970 = 10.

It is also recommended to perform a factory reset of fail-safe parameters with P0970 = 10, if a fault has been made during safety commissioning, and the system is in an undefined state.

NOTICE
Behavior of inverter on completion of commissioning The following behavior should be noted when commissioning the inverter: • After commissioning the fail-safe functions the fail-safe parameters are automatically stored in the RAM and EEPROM. • If an MMC is plugged into the CU, this is not affected by normal commissioning or commissioning the fail-safe functions. • To save the EEPROM content on an MMC, an upload from the inverter to the MMC has to be performed. • After commissioning the fail-safe functions, an acceptance test must be carried out.

5.5.6.1 Parameters for Fail-Safe Functions

Description

The following table gives an overview of all parameters for fail-safe functions. Fail-safe parameters have access level 3 (P0003 = 3). To modify values of fail-safe parameters a password is required (P9761). A detailed description is given in the parameter list.

Since there are two processors on CUs with integrated fail-safe functions, they will be distinguished as follows:

- The drive processor will be termed as P1
- The communications processor will be termed as P2.

Table 5- 8 Parameters for fail-safe functions

Parameter	Description	Unit	Default value	Min. value	Max. value
Drive processor					
P9601	SI enable parameter	-	2	0	2
P9602	SI enable safe brake monitoring	-	0	0	1
P9603	SI Selection of safety command source	-	0	0	240
r9620	SI Status word	-	-	-	-
P9650	SI Safe Digital Input debounce delay time	ms	50	0	2000
P9651	SI Safe Digital Input filter delay time	ms	5	0	100
P9659	SI maximum time until test stop	h	8.0	0.1	8760.0
r9660	SI remaining time until test stop	h	-	-	-
P9680	SI braking ramp delay	ms	250	10	99000
P9681	SI braking ramp down time	ms	10000	100	99000
P9682	SI minimum speed for standstill detection	Hz	5.0	2.0	20.0
P9690	SI setpoint for SLS	Hz	10.0	1.0	300.0
P9691	SI tolerance for SLS	Hz	13.0	5.0	302.0
P9692	SI response to selecting SLS	-	1	0	2
P9761	SI input password	-	0	1000	99999
P9762	SI change password	-	0	1000	99999
P9793	SI change password confirmation	-	0	1000	99999
r9770	SI Firmware version	-	-	-	-
r9771	SI hardware functions	-	-	-	-
r9772	SI status word	-	-	-	-
r9798	SI display checksum	-	0000h	0000h	FFFFh
P9799	SI parameter checksum	-	0000h	0000h	FFFFh
P9810	PROFIsafe destination address	-	0	0	65534
Communication processor					
P9801	SI enable parameter	-	2	0	2
P9802	SI enable safe brake monitoring	-	0	0	1
P9803	SI Selection of safety command source	-	0	0	240

Parameter	Description	Unit	Default value	Min. value	Max. value
r9820	SI Status word	-	-	-	-
P9850	SI Safe Digital Input debounce delay time	s	0.050	0.000	2.000
P9851	SI Safe Digital Input filter delay time	s	0.005	0.000	0.100
P9880	SI braking ramp delay	s	0.250	0.010	99.000
P9881	SI braking ramp down time	s	10.000	0.100	99.000
P9882	SI minimum speed for standstill detection	kHz	0.005	0.002	0.020
P9890	SI setpoint for SLS	kHz	0.010	0.001	0.300
P9891	SI tolerance for SLS	kHz	0.013	0.005	0.302
P9892	SI response to selecting SLS	-	1	0	2
r9898	SI display checksum	-	0000h	0000h	FFFFh
P9899	SI parameter checksum	-	0000h	0000h	FFFFh

5.5.6.2 Password for fail-safe functions

Description

There are three parameters associated with the password protection system. They require level 3 access (only important when using OP) – the parameters are as follows:

- P9761 to get access to the fail-safe paramters
- P9762 and P9763 to change the currently valid password

Details see "General Steps for Commissioning Fail-Safe Functions"

5.5.6.3 Checksums

Description

All parameters for fail-safe functions are verified by the use of checksums. These checksums ensure the integrity of the data held within the drive processors memory.

There are four checksum, two for each of the processors, these are:

- r9798 – actual checksum for P1.
- P9799 – reference checksum for P1.
- r9898 – actual checksum for P2.
- P9899 – reference checksum for P2.

5.5.6.4 General Steps for Commissioning Fail-Safe Functions

Description

The parameters designated with an "*" offer more setting possibilities than are listed here. Refer to the parameter list for additional setting possibilities.

The following steps must always be carried-out when changing fail-safe functions:

Parameter	Description	Unit	Default	Min.	Max.
P0003 = 3	**User access level*** 3: Expert: For expert use only		1	0	4
P0010 = 95	**Commissioning parameter*** 95: Commissioning the fail-safe functions		0	0	95
P9761	**SI input password** If the password is entered correctly, access will be granted. If not, the parameters for fail-safe functions are non-accessible and the user will have to exit the commissioning mode for fail-safe functions manually by using parameter P3900 = 11 which cancels all previous changes to the parameters for fail-safe functions.	-	12345	1000	99999
Change requested fail-safe parameters, then finish the parameterization with the following steps:					
P9799	**Checksum for SI parameters** Checksum of the fail-safe function parameters. Enter value of r9798	-	000h	000h	FFFFh
P9899	**Checksum for SI parameters** Checksum of the fail-safe function parameters. Enter value of r9898	-	000h	000h	FFFFh
P3900 = 10	**End of the safety commissioning*** 10: Accept changes of fail-safe function parameters 11: Cancel changes of fail-safe function parameters		0	0	11

5.5.6.5 Common Step-by-Step Descriptions For Fail-Safe Functions

Change password

Parameter	Description	Unit	Default	Min.	Max.
P9761	**SI input password** The safety password is entered in this parameter to get access to change the fail-safe parameters.	-	0	1000	99999
P9762	**SI change password** Enter the new password. The password must have 5 digits but no leading zero (0).	-	0	1000	99999
P9763	**SI change password confirmation** Confirm the password in this parameter. If P9762 and P9763 are identical, the password changes to the new value and P9762 as well as P9763 are set to "0".	-	0	1000	99999

Enabling fail-safe functions / activate FDI status bits

Parameter	Description	Unit	Default	Min.	Max.
P9601 = …	**SI enable parameter** Fail-safe parameter for enabling the individual fail-safe control functions. Bit 00 = 1/0: Reserved Bit 01 = 1/0: Activation/deactivation of the forced dynamisation after STO (P9601.1 = P9801.1 = 1: Forced dynamisation activated)	-	2	0	14
P9801 = …	**SI enable parameter** Refer to P9601	-	2	0	14

Enable fail-safe brake monitoring

Parameter	Description	Unit	Default	Min.	Max.
P9602 = …	**SI enable safe brake monitoring** 0: Disable monitoring of safe brake control 1: Enable monitoring of safe brake control	-	0	0	1
P9802 = …	**SI enable safe brake monitoring** Refer to P9602	-	0	0	1

Select fail-safe command source

Parameter	Description	Unit	Default	Min.	Max.
P9603 = …	**SI Selection of safety command source** Fail-safe parameter for selection of the fail-safe input signals. As source for the fail-safe functions the fail-safe digital inputs or PROFIsafe can be used. Selects either safe digital inputs or PROFIsafe . • Bit 00 = 1/0: SLS activated/deactivated via FDI1A and FDI1B • Bit 01 = 1/0: SLS activated/deactivated via FDI0A and FDI0B • Bit 02 = 1/0: SS1 activated/deactivated via FDI1A and FDI1B • Bit 03 = 1/0: SS1 activated/deactivated FDI0A and FDI0B • Bit 04 = 1/0: STO activated/deactivated FDI1A and FDI1B • Bit 05 = 1/0: STO activated/deactivated FDI0A and FDI0B • Bit 06 = 1/0: PROFIsafe SLS activated (0: before SW3.2) • Bit 07 = 1/0: SLS, SS1 and STO activated/deactivated via PROFIsafe	-	0	0	240
P9803 = …	**Selection of safety command source** Refer to P9603	-	0	0	240

Consistency check time of fail-safe digital inputs

Parameter	Description	Unit	Default	Min.	Max.
P9650 = …	**Safe input debounce delay time** Defines the maximum allowed debounce delay between the two safe digital input pins. If both safe digital inputs are not consistent after this time a fault will be generated (1600.108 or 1600.208).	ms	50	0	2000
P9850 = …	**Safe input debounce delay time** Refer to P9650.	s	0.050	0.000	2.000

Filter time of fail-safe digital inputs

Parameter	Description	Unit	Default	Min.	Max.
P9651 = …	**Safe input filter delay time** Defines the response time delay of the safe digital inputs. Signals that are shorter than the specified time are not processed as fail-safe signals but ignored. Any noise shorter than the parameterised filter time will not trigger a fail safe function at the related fail safe digital input.	ms	5	0	1000
P9851 = …	**Safe input filter delay time** Refer to P9650.	s	0.005	0.000	1.000

Test stop interval setting

Parameter	Description	Unit	Default	Min.	Max.
P9659 = …	**SI maximum time until test stop***	h	8.0	0.1	8760.0
	The time interval between test stops is specified in this parameter. The remaining time until a test stop is required is shown in r9660. When r9660 reaches zero, the time interval has expired and warning A1699 is activated. The warning solely informs that a test stop is required. The user should activate a test stop on the next occasion. The drive functionality will not be affected by the warning. The test stop is activated in the following cases: • after each power-up • on selecting the STO when Bit 01 in P9601/P9801 is set • when leaving the latched safe torque off (LSTO). During the test stop the shutdown paths are checked and a processor selftest runs. The timer for the forced dynamisation (see r9660) is reset to the default value specified in P9659 and warning A1699 is cleared under the following conditions: • after reducing P9659 below the current value in r9660, • after each power-up • on selecting the STO when Bit 01 in P9601/P9801 is set and the test is complete • when leaving the LSTO when the test is complete. The default value is 8 hours. **Note:** For safety reasons, it is necessary to initiate the safe standstill as a test at intervals of maximum one year in order to check the operability of the fail-safe system. Thus, at the latest one year after the last activation of the safe standstill the inverter sets a status bit (r9772, Bit 15) and generates warning A1699. The process control (i.e. PLC) must then initiate the STO at the next opportunity, for example, when the drive has already a short phase with zero speed. Provided the dynamisation has not been deactivated (see parameters P9601/P9801, Bit 01), the fail-safe hardware is tested once the safe standstill is active. If the inverter returns the "Safe torque off (STO) selected" (r9772, Bit 01) status signal, the safe standstill can be released again since part of the test is continued in the background. The immediate switch-on will be inhibited for approximately 2.4 seconds. Once the self test is complete the dynamisation bit (Bit 15 of r9772) is cleared automatically. The higher level control (i.e. PLC) must log the setting and clearing of the status bit and the dynamisation bit. To detect errors while writing and storing safety-relevant data, the control should fetch cyclically at 8 hour intervals all safety-related parameters and compare them with the expected values. Should there be a difference, the fail-safe signals (STO or SS1) should be used to initiate a safe standstill and to issue a fault message. This action must also be logged appropriately.				

Safe Stop 1 setting

Parameter	Description	Unit	Default	Min.	Max.
P9680 = …	**SI braking ramp delay** Time [in ms] between selecting the safe braking ramp (SBR) and the activation of the monitoring ramp. The output frequency is compared to the frequency of the monitoring ramp when the SBR is active. If the output frequency exceeds that of the monitoring ramp, an latched safe torge off (LSTO) is generated. For applications with changing loads, an increase of P9680/P9880 or P9691/P9891 is recommended. A larger deviation of the output frequency from the reference is then acceptable. **Note:** A value of 99000 would deactivate the SBR monitoring, this value therefore is not allowed. Set P9880 accordingly. The ramping on selection of SLS or SS1 will however still follow the ramping time in P9681/P9881.	ms	250	10	99000
P9880 = …	**SI braking ramp delay** Refer to P9680.	s	0.250	0.010	99.000
P9681 = …	**SI braking ramp-down time** Defines the braking ramp-down time for the dafe braking ramp (SBR) in seconds. The ramp-down time is used for the SBR and the monitoring ramp. The total braking time Tx can be derived where fx is the current frequency according to the following formulas: a) For activation of the SLS: Tx = P9681 * (fx - P9690)/200 Hz b) For activation of SS1: Tx = P9681 * (fx - P9682)/200 Hz **Note:** In contrast to other ramping times (e.g. p1120, p1121), the SI braking ramp-down time is referred to 200 Hz and not to p1082. See formulas above.	ms	10000	100	99000
P9881 = …	**SI braking ramp-down time** Refer to P9681.	s	10.000	0.100	99.000
P9682 = …	**SI minimum speed for standstill detection** A speed below the threshold of P9682/P9882 is considered as standstill. If the SS1 has been selected, the safe standstill (STO) will be activated.	Hz	5.0	2.0	20.0
P9882 = …	**SI minimum speed for standstill detection** Refer to P9682.	kHz	0.005	0.002	0.020

Safely-limited Speed

Parameter	Description	Unit	Default	Min.	Max.
P9690	**SI setpoint for SLS** Speed setpoint that is used when the safely limited speed (SLS) is selected. Depending on the setting in P9692/P9892 the frequency of P9690/P9890 may also serve as a speed threshold instead of a setpoint (see P9692). **Note:** For applications with changing loads, an increase of P9680/P9880 or P9691/P9891 is recommended. If the "safely limited speed" (SLS) is selected while the output frequency is below the setpoint value, Bit 04 and Bit 05 will be set simultanously in r9772.	Hz	10.0	2.0	300.0
P9890	**SI setpoint for SLS** Refer to P9690.	kHz	0.010	0.002	0.300
P9691	**SI tolerance for SLS** Upper tolerance margin for the SLS. If the output frequency at initiation of the safely limited speed lies below the value of P9691/P9891 and later on exceeds that value an LSTO is generated. The tolerance defined by the difference P9691 to P9690 (or P9891 to P9890) is also used for the monitoring ramp when the SBR is active. For applications with changing loads it is recommended to increase P9691/P9891. **Note:** The value in P9691 needs to be larger than the value in P9690. This condition is checked when leaving the safety commissioning.	Hz	13.0	5.0	302.0
P9891	**SI tolerance for SLS** Refer to P9691.	kHz	0.013	0.005	0.302
P9692	**SI response to selecting SLS** Response if, after initiation of safely limited speed (SLS), the speed exceeds the limiting values: • **SLS mode 0**: Activation of the speed monitoring and disabling the set value channel. If the output frequency at initiation of SLS exceeds the parameterized speed limit an LSTO is initiated. If the output frequency falls below the accuracy limit (1 Hz) an STO is triggered. • **SLS mode 1**: Braking to the set speed with safe braking ramp, then activation of the monitoring function and disabling the set value channel. If the output frequency falls below the accuracy limit (1 Hz) an STO is triggered. • **SLS mode 2** The monitoring is activated at once. If the output frequency at initiation of SLS exceeds the parameterized speed limit an LSTO is initiated. The set value channel is not disabled. If the output frequency falls below the accuracy limit (1 Hz) an STO is triggered. • **SLS mode 3** Like SLS mode 2 except the following: If the output frequency falls below the accuracy limit (1 Hz) the inverter stays in operational state for 5 s. Within this five seconds reversing or speed up again is possible.	-	1	0	2
P9892	**SI response to selecting SLS** Refer to P9692.	-	1	0	2

5.5.6.6 Factory Reset of Fail-safe Parameters

Description

The factory reset of fail-safe parameters sets all fail-safe parameters to its default value except the following:

- P9761 SI input password
- P9762 SI change password
- P9763 SI change password confirmation

Procedure for resetting the fail-safe related parameters

Parameter	Description
P0003 = 3	User access level* 1: Standard: Allows access into most frequently used parameters. 2: Extended: Allows extended access e.g. to inverter I/O functions 3: Expert: For expert use only
P0004 = 0	Parameter filter* 0: All parameters
P0010 = 30	Commissioning parameter* 0: Ready 30: Factory setting, parameter transfer
P9761	SI input password Enter the safety password
P0970 = 10	Factory reset* 0: Disabled (default) 1: Parameter reset 10: Safety reset
BUSY (on BOP)	When the factory reset has been finished, P0970 and P0010 are set to 0 and the BOP changes back to the standard display.

5.5.6.7 Acceptance Test and Acceptance Log

Description

In order to verify the parameter settings for the fail-safe functions, an acceptance test must be carried-out after the following operations:

- Commissioning
- Safety reset
- Automatic download of a parameter set via MMC

This acceptance test must be appropriately logged and documented. An example for an appropriate acceptance log is included in the appendix. The acceptance logs should be adequately archived.

Acceptance test

The machinery construction company (OEM) must carry-out an acceptance test for the fail-safe functions that have been activated at the machine.

Authorized person, acceptance log

Appropriately authorized personnel must test each of the fail-safe functions. These must be documented/logged in an acceptance log and must be signed. The acceptance log must be inserted/attached in/to the logbook of the machine

Authorized in this case means a person from the machinery construction company (OEM) that as a result of their training and knowledge regarding the fail-safe functions, can appropriately carry-out an acceptance test.

Note

The information/instructions and descriptive information regarding commissioning in Section "Commissioning the fail-safe functions" of this m anual must be carefully observed.

If parameters for the fail-safe functions are changed, then a new acceptance test must be carried-out and included as acceptance log.

The template for the acceptance log is provided in printed form as example or recommendation in this Operating Instructions.

Contents of a complete acceptance test

Documentation

Documentation of the machine including the fail-safe functions.

- Machine description and overview/block diagram
- Fail-safe functions for each drive
- Description of the fail-safe devices/equipment.

Function test

Checking the individual fail-safe functions that are used.

- "Safe Torque Off" (STO)
- "Safe Stop 1" (SS1)
- "Safely-Limited Speed" (SLS)
- "Safe Brake Control" (SBC).

Completing the log

Document/log the commissioning phase and sign.

- Check the parameters of the fail-safe functions
- Document/log the checksums
- Provide proof that data has been backed-up/archived
- Sign.

Attachment

Measuring traces/plots associated with the function test.

- Alarm logs
- Trace plots.

Note

A form for an acceptance log is attached in the appendix of the operating instructions.

5.5.7 Series commissioning using the BOP

Upload and download a parameter set with a BOP

With a BOP a single parameter set can be uploaded from an inverter and then downloaded into another inverter.

To copy a parameter set from one inverter to another, the following procedure should be performed.

Upload a parameter set with a BOP

Prerequisites

- An inverter with an appropriate parameter set is available (upload inverter)
- Supply voltage is active for the upload inverter
- The upload inverter is in "Ready to Run".

Parameter	Description	Setting
	Fit the BOP to the Inverter - for the parameter set to be uploaded, perform the following steps:	
P0003 = 3	**User access level*** 1: Standard: Allows access into most frequently used parameters (default) 2: Extended: Allows extended access e.g. to inverter I/O functions 3: Expert: For expert use only	
P0010 = 30	**Commissioning parameter*** 0: Ready (default)1: Quick commissioning 2: Inverter 30: Factory setting, parameter transfer 95: Safety commissioning (for CUs with fail-safe functions only)	
P0802 = 1	**Transfer data from EEPROM** 0: Disabled (default) 1: Start BOP transfer 2: Start MMC Transfer While the upload is active "bUSY" will be displayed on the BOP and the inverter will not react to any commands.	
	If the upload has been completed successfully, P0010 and P0802 will be set to 0 and the BOP display will return to normal. If the upload has failed, F00051 (failure while accessing EEPROM), F00055 (failure while saving parameter on BOP) or F00057 (BOP fault) will be displayed. In this case attempt another upload or perform a power-cycle to confirm F00051.	
	After a successful upload disconnect the BOP from the upload inverter to connect it to the download inverter.	

Download a parameter set with a BOP

Prerequisites

- Supply voltage is active for the download inverter
- The download inverter is in "Ready to Run".

Parameter	Description	Setting
	Fit the BOP to the inverter and perform the download according the flow chart.	
P0003 = 3	**User access level*** 1: Standard: Allows access to the most frequently used parameters (default) 2: Extended: Allows extended access e.g. to inverter I/O functions 3: Expert: For expert use only	
P0010 = 30	**Commissioning parameter*** 0: Ready (default)1: Quick commissioning 2: Inverter 30: Factory setting, parameter transfer 95: Safety commissioning (for CUs with fail-safe functions only)	
P0803 = 1	**Transfer data to EEPROM** 0: Disabled (default) 1: Start BOP transfer 2: Start MMC Transfer While the download is active "bUSY" will be displayed on the BOP and the inverter will not react to any commands.	
	If the download has been completed successfully, P0010 and P0803 will be set to 0 and the BOP display will return to normal. If the download has failed, F00051 (failure while accessing EEPROM), F00055 (failure while saving parameter to EEPROM), F00057 (BOP fault) or F00058 (BOP contents incompatible) will be displayed. In this case attempt another download, perform a factory reset to allow the inverter to return to a known state or perform a power-cycle to confirm F00051.	
	After a successful download the BOP can be removed and connected to another inverter for download. Then perform the download steps again until the series commissioning has been completed for all inverters.	

5.6 Commissioning with STARTER

Interfaces STARTER

A PC with STARTER software can be connected via one of the following interfaces - which are Control Unit dependent:

Table 5- 9 Connection possibilities for STARTER

	CU240S	CU240S DP CU240S DP-F	CU240S PN CU240S PN-F
Option port Peer to peer (via PC Connection Kit)	x	x	x
Sub D connector Peer to peer (Sub D cable & RS485 to RS232 converter)	x	---	---
Sub D connector Up to 125 slaves (via Sub D cable)	---	x	---
RJ45 Up to 10 slaves in a line. Via switch, the number of slaves is limited by the address range of the higher-level control system.	---	---	x

General information for connecting STARTER

USS address: see P2011, default setting P2011 = 0

USS baudrate: see P2010, default setting P2010 = 8 (≙ 38400 baud)

PROFIBUS DP address: see section "Communication Settings PROFBUS DP"

PROFINET address: see P08830

PROFINET IP address: see P08831

PROFINET IP subnetmask: see P08832

PROFINET internal MAC address: see P61002

5.6.1 Single Commissioning with STARTER

STARTER projects

Using STARTER either a new project can be created or an already existing project can be opened.

To create a new project in STARTER one of the following methods can be used:

- Search inverter
- Wizard
- Select inverter

When opening an existing project or creating a new project STARTER is in the offline mode. To go online the button has to be pressed.

Changing parameters with STARTER

Parameters can be changed online or offline (online preferred).

Online parameter changes are stored in the RAM of the inverter. A manual transfer from RAM to EEPROM can be triggered by pressing the button . When closing STARTER and the contents of the RAM and EEPROM are different, the user is asked whether or not they wish to transfer the RAM data to the EEPROM.

Parameter sets that have been changed offline can be transferred to the inverter using the download button.

⚠ CAUTION
If you use fail-safe applications, pay attention to the following note: • Parameters for fail-safe functions can only be changed in the online mode. When downloading parameters via STARTER, parameters belonging to fail-safe functions will not be downloaded.

5.6.2 Series Commissioning with STARTER

Upload a parameter set with STARTER

Prerequisites

- An inverter with an apropriate parameter set is available (upload inverter)
- STARTER is installed on the PC used for series commissioning
- Supply voltage is active for the upload inverter
- The upload inverter is in "Ready to Run".

Connect the STARTER PC via the Option Port(USS on RS232, peer to peer)to the upload **inverter** (PC connection Kit requiered), press the online button and perform the upload by activating the button .

Note

Upload with STARTER to MMC or BOP

If you want to upload a parameter set with STARTER to an MMC or a BOP, P0010, P0802 must be set via the expert list.

Download a parameter set with STARTER

Prerequisites

- Supply voltage is active for the download inverter
- The download inverter is in "Ready to Run".

Connect the STARTER PC via the Option Port (USS on RS232, peer to peer) to the download inverter (PC connection Kit requiered), press the online button and perform the download by activating the button . The data set must be saved in the EEPROM.

Note

Download with STARTER to MMC or BOP

If you want to perform an manual download of a parameter set with STARTER from an MMC or a BOP, P0010, P0803 and P0804 must be set via the expert list.

5.7 Commissioning with the MMC

5.7.1 Parameter Download via MMC

Overview

A G120 inverter can be parameterized by downloading a parameter set from the MMC to the inverter.

The download can be performed as

- Manual Download
- Automatic Download

A detailed download description can be found in the section "Upload and Download of Parameter Sets".

Note

The file format for the MMC is FAT. Any other format, such as FAT32 or NTFS are not compatible with uploading and downloading parameter sets from the inverter.

Formatting can be accomplished using the DOS command line as follows:

C:\>format volume /FS:FAT - where volume has to be replaced by the name of the MMC drive, for example A

Please keep in mind that formatting will delete all the contents of the MMC.

5.7.2 Series commissioning with MMC

Inserting and removing the MMC

Before upload or download can be performed an MMC has to be fitted. How to fit and remove the MMC see the following figure:

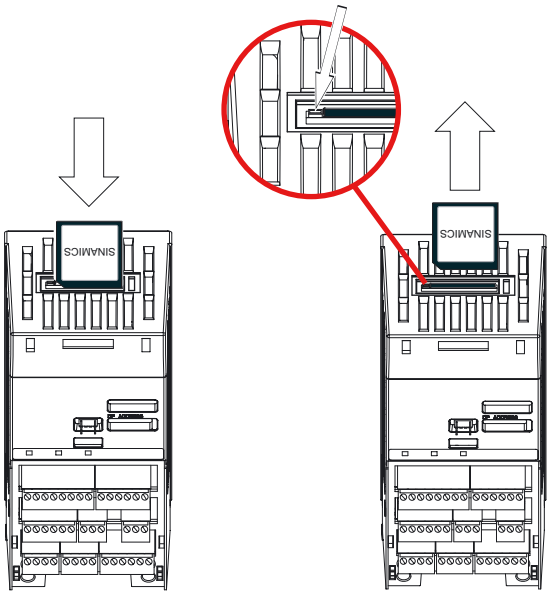

Figure 5-3 Fitting and Removing the MMC

⚠ WARNING

When inserting an MMC during operation Alarm A0564 appears if P8458 is set to 0. This is a hint that with P8458 = 0 no Automatic Download will be performed at startup.

If the MMC is inserted to perform an upload this alarm can be quitted without any further action.

If the MMC is inserted to perform an Automatic Download P8458 must be set accordingly.

Note

PROFINET communication

If you use the MMC for commissioning an SINAMICS G120 inverter with CU240S PN, keep in mind, that the device name of the inverter must be set manual either using the Primary Setup Tool (PST) or using HW Config from STEP 7.

Upload a parameter set with an MMC

Prerequisites

To upload a parameter set the following important conditions must be fulfilled:

- An inverter with an appropriate parameter set is available (upload inverter).
- An MMC Type 6SL3254-0AM00-0AA0 is available.
- Supply voltage is active for the upload inverter.
- The upload inverter is in "Ready to Run"".
- The parameters are copied from RAM to EEPROM.

Procedure

Note

During a parameter upload from the EEPROM to a MMC (e.g. for serial commissioning) the LEDs are flashing.

If the Control Unit is in a faulty state, the fault will be displayed by the LEDs (SF on, RDY off).

Parameter	Description (Parameter name and factory setting (if not variable) in bold)	Setting
	Insert the MMC to the inverter - for the parameter set to be uploaded, perform the following steps:	
P0010 = 30	**Commissioning parameter*** **0: Ready** 1: Quick commissioning 2: Inverter 30: Factory setting, parameter transfer 95: Safety commissioning (for CUs with fail-safe functions only)	
P0804 = …	**Select Clone file** **0: clone00.bin** **…** 99: clone99.bin **Note**: Via P0804 the name of the clone file can be selected. Theoretically up to 100 (0 … 99) parameter sets can be stored on an MMC.	
	Note: Before uploading, the parameters will be copied from RAM to EEPROM.	
P0802 = 2	**Transfer data from EEPROM** **0: Disabled** 1: Start BOP Transfer 2: Start MMC Transfer	
	If the upload has been completed successfully, P0010 and P0802 will be set to 0 and the "RDY" LED is on. If the upload has failed, F0061 (MMC-PS not fitted) or F0051 (failure while accessing EEPROM) will be displayed, LED "SF" (red) is on. In this case insert an MMC and attempt another upload.	
	After a successful upload remove the MMC from the upload inverter to insert it into the download inverter.	

Manual Download of a parameter set with an MMC

Prerequisites

- Supply voltage is active for the download inverter
- The download inverter is in "Ready State"
- On the MMC the following folder structure must be available:
  /USER/SINAMICS/DATA/clonexx.bin

Procedure

Note

The following important conditions must be fulfilled when using the download procedure:

- During the download the inverter will not react to any commands.
- Once the download procedure has started, it cannot be interrupted.
- After upload and download of parameters between differing Control Units, parameter settings must be checked.
- Parameter download from a different CU might fail with F0063 if parameters cannot be downloaded (Check P949 for the (first) parameter number which cannot be downloaded).
- If the download fails, the inverter reverts to the previous parameters from the EEPROM.

Parameter	Description (Parameter name and factory setting (if not variable) in bold)	Setting
	Insert the MMC to the download inverter and perform the Manual Download according the flow chart.	
P0010 = 30	**Commissioning parameter*** **0**: **Ready** 1: Quick commissioning 2: Inverter 30: Factory setting, parameter transfer 95: Safety commissioning (for CUs with fail-safe functions only)	
P0804 = …	**Select Clone file** (for download) **0**: **clone00.bin** **…** 99: clone99.bin	
P0803 = 2	**Transfer data to EEPROM** **0**: **Disabled** 1: Start BOP Transfer 2: Start MMC Transfer	
	If the download has been completed successfully, P0010 and P0803 will be set to 0 and the "RDY" LED is on. If the upload has failed, F0061 (MMC-PS not fitted), F0062 (MMC-PS contents invalid) resp. F0063 (MMC-PS contents incompatible) or F0051 (failure while accessing EEPROM) will be displayed, LED "SF" (red) is on. In this case insert a proper MMC and attempt another download or perform a factory reset.	
	After a successful Manual Download the MMC can be removed from the inverter and inserted into the next download inverter. Then perform the download steps again until the series commissioning has been completed for all inverters.	

Note

If P0014 = 0, you can always transfer all parameter values from RAM into EEPROM via P0971. The duration of the data transfer depends on the number of changed parameters. The data transfer can last up to 3 minutes. During the data transfer, BOP displays "bUSY".

Automatic Download

The Automatic Download at start-up is controlled via P8458. With the Automatic Download all necessary parameters including the parameters regarding fail-safe functions are downloaded into the inverter.

Note

MMC for "Automatic Download"

For an Automatic Download always the file clone00.bin will be used.

The user has to take care, that clone00.bin (saved as "clone00.bin" with STARTER on PC or via setting P0804 = 00 with the BOP) is available on the MMC, used for an automatic parameter download at start-up. Otherwise Automatic Download will not be processed.

Parameter P8458 controls the kind auf the Automatic Download. The possible settings for P8458 and their functions are given below.

P8458 = 0:	Automatic parameter download from the MMC is inhibited.
P8458 = 1:	Automatic parameter download from the MMC only once (at the next start-up of the CU (default setting)). After the download P8458 is set to 0.
P8458 = 2:	Automatic parameter download from the MMC after each start-up of the control unit.

Successful Automatic Download

After a successful Automatic Download, F0395 will be displayed. Clearing F00395 is described in the section "Message F00395".

⚠ WARNING
The user is responsible for ensuring that the parameters held in the CU are the correct parameters for their application.

Acceptance test

On CUs with integrated fail-safe functions it is necessary to do an acceptance test (refer to the "Fail-safe functions" section in this manual). To clear F0395 on CUs with integrated fail-safe functions the following procedure has to be followed:

- P0010 = 30
- P9761 = fail-safe password
- P7844 = 0
- Carry out acceptance test

Automatic download fault

If the Automatic Download process fails, the CU will return to the parameter set previously held in the EEPROM and the following fault codes are generated:

Table 5- 10 Automatic download fault codes

Fault code	Description
F0061	Automatic download of parameters was not successful. (download file not found).
F0063	Automatic download of parameters was not successful (download file not compatible).
F0051	Failure while accessing EEPROM
Clearing of these faults is described in the section "Faults and Alarms" of this manual.	

In this case check, whether the MMC is defective or a parameter set clone00.bin is available or the parameter set is valid. For details refer to Parameter List.

A valid parameter set means, it is not from a different type (e.g. CU20S DP and CU240S or fail-safe and standard CUs).

5.8 Commissioning the Encoder

Description

⚠ WARNING

Before installing and commissioning, please read these safety instructions and warning carefully and all the warning labels attached to the equipment. Make sure that the warning labels are kept in a legible condition and replace missing or damaged labels.

This equipment contains dangerous voltages and controls potentially dangerous rotating mechanical parts.

Non-Compliance with Warnings or failure to follow the instructions contained in this manual can result in loss of life, severe personal injury or serious damage to property.

Only suitably qualified personnel should work on this equipment, and only after becoming familiar with all safety notices and maintenance procedures contained in this manual.

The successful and safe operation of this equipment is dependent upon its proper handling, storage, installation, operation and maintenance.

National safety regulations are also applicable.

Procedure of encoder commissioning

The encoder commissioning differs slightly for HTL and TTL encoder. The following table gives an overview about the single steps depending on the type of encoder.

Table 5- 11 Commissioning the Encoder

Step	Description	TTL	HTL
1.	Ensure the Inverter is switched off.	X	X
2.	Connect: Encoder Channel A - CU terminal 70 (ENC AP).	X	X
3.	Connect: Encoder Channel A inverted - CU terminal 71 (ENC AN).	X	X
4.	Connect: Encoder Channel B - CU terminal 72 (ENC BP).	X	X
5.	Connect: Encoder channel B inverted - CU terminal 73 (ENC BP).	X	X
6.	Connect: Encoder channel Z - CU terminal 74 (ENC ZP).	X	X
7.	Connect: Encoder channel Z inverted - CU terminal 75 (ENC ZN).	X	X
8.	Connect: Encoder positive power cable - CU terminal 33 (ENC+ SUPPLY).	X	X
9.	Connect: Encoder negative power cable - CU terminal 28 (U0V).	X	X
10.	CU: Set DIP-switch 4 (5 V) to the ON position (TTL))	X	
11.	CU: set DIP-switch 3 (24 V) to the ON position (HTL)		X
12.	Check all the Encoder - CU connections and the position of DIP-switches 3 and 4.	X	X
13.	Switch the inverter ON.	X	X
14.	The Encoder interface now requires to be parameterized. A step-by-step description that shows the required parameters is given in the following section.	X	X

⚠ CAUTION

Use of unscreened cables is possible, however we recommend the use of screened cables, in order to fulfill the EMC requirements for the CE marking and fail-safe products (CU240S DP-F).

Note

The cable from the encoder to the Encoder Module should be one complete length.

TTL-encoder specific

If the encoder type is a TTL differential and a long cable length is required (>50 m), DIP switches 5, 6, and 7 may be set to ON.

If the encoder type is a TTL single-ended encoder, there will be three wires for the ‘A’, 'B' and 'Z' Channels.

HTL-encoder specific

The terminating impedance which is selected using the DIP-switches must not be used in conjunction with an HTL encoder.

The encoder voltage is using the general I/O DIP switches 3 and 4.

The following table shows the possible settings:

Table 5- 12 Encoder voltage settings

On OFF			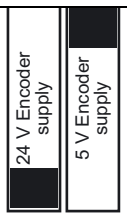	
Encoder supply voltage	0 V	24 V	5 V	24 V
Encoder type	No encoder	HTL encoder	TTL encoder	HTL encoder

⚠ WARNING

DIP switches 3 or 4 in ON position provide a supply voltage of 24 V to the encoder. Therefore it is not allowed to connect a TTL encoder to the inverter if one of the DIP switches, 3 or 4 are in ON position.

5.8.1 Parameterizing the Encoder Interface

Encoder parameterization

To enable the encoder to function correctly with the inverter, the parameters in the table below, must be modified.

Table 5- 13 Encoder parameters

Parameter	Name Comment
P0400[3]	**Encoder type** • 0: No encoder • 2 or12: Quadrature encoder (channel A + B) – the term "quadrature" means two periodic functions separated by a quarter cycle or 90 degrees
P0405	**Encoder pulse types** Enables selection of various pulse types. Only bits 04 and 05 are used for the SINAMICS G120. See parameter list.
P0408[3]	**Pulses per revolution** Specifies the number of encoder pulses per revolution. The manufacturer of the speed encoder specifies this value. 360, 500 or 1024 are values that are generally used. The encoder resolution (pulses per revolution p0408) which may be entered will be limited by the max. pulse frequency of the encoder circuits (f_max = 300 kHz). The following equation calculates the encoder frequency depending on the encoder resolution and the rotational speed (rpm). The encoder frequency has to be less than the max. pulse frequency: $f_{max} > f = \frac{P0408 \times U/min}{60}$
P0410	**Reverses internal direction sense** Setting P0410 =1 can be used to reverse the encoder signals instead of changing ENC_A and ENC_B wiring. 0: Encoder Normal Rotation 1: Encoder Reverse Rotation
P0491[3]	**Reaction on speed signal loss** Selects reaction on loss of speed signal. Settings: 0: Trip with OFF2 1: Alarm and change to SLVC

Parameter	Name Comment
P0492[3]	**Allowed speed difference** This parameter defines the frequency threshold for the loss of the encoder signal (fault F0090). The threshold is used both for low as well as also high frequencies. 1. Signal loss at high frequencies: Fault F0090 is output if the actual frequency and the frequency difference between two sampling periods (t_A) is greater than that specified in parameter p0492: (actual frequency f_act > p0492 and f(t_A2) - f(t_A1) > p0492) **Note** A fixed delay time of 40 ms is stored in the frequency converter. Fault F0090 is only activated when the encoder signal is lost at a high frequency after this delay time has expired. 2. **Signal loss at low frequencies:** Fault F0090 is output if all of the conditions for case 1 or case 2 are simultaneously fulfilled: **Case 1** – actual frequency < p0492 – r0061 = 0 and the torque is limited – r0061 = 0 with setpoint frequency f_set > 0 for a time > p0494 **Case 2** - actual frequency < p0492 - f(t_A2) < p0492 and a fault is detected in channel B **Inter-dependency** This parameter is updated after the motor starting time p0345 has been changed or the speed was optimized (p1960 = 1). **Caution** p0492 = 0 (no monitoring function): With p0492 = 0, the loss of the encoder signal at high frequency as well as at a low frequency is de-activated. As a result, the system does not monitor for the loss of the encoder signal. If the encoder signal loss is de-activated and the fault occurs, then the closed-loop motor control can become unstable
P0494[3]	**Delay speed loss reaction** Used for low speed encoder loss detection. If the motor shaft speed is less than the value in P0492 then encoder loss is detected using a low speed encoder loss detection algorithm. This parameter selects the delay between loss of encoder at low speed and reaction to the encoder loss. (Default = Calculated from inertia, Range from 0 to 64.000s). **Dependency**: This parameter is updated when P0345 Motor start-up time is changed or when a speed-loop optimization is performed (P1960 = 1). **Caution**: When this delay is set to 0, then low speed encoder loss detection is disabled and low speed encoder loss cannot be detected (high speed encoder loss detection will still operate if P0492 > 0). If low speed encoder loss detection is disabled and encoder should be lost at low speed, then operation of motor may become unstable.
P1300	**Control Mode** 21: Closed loop speed control 23: Closed loop torque control

Table 5- 14 Monitoring parameters

Parameter	Name Comment		
r0061	CO: Rotor speed Indicates the speed of the rotor. Used to check that the system is working correctly.		
r0090	CO: Act. rotor angle Indicates the current angle of the rotor. This function is not available on single input channel encoders.		
r0403	CO/BO: Encoder status word Displays status word of speed encoder in bit format:		
	Bit 00 - Encoder active	0 = No	1 = Yes
	Bit 01 - Encoder fault	0 = No	1 = Yes
	Bit 02 - Signal OK	0 = No	1 = Yes
	Bit 03 - Encoder low speed loss	0 = No	1 = Yes
	Bit 04 - Single edge measurement	0 = No	1 = Yes

⚠ CAUTION

When commissioning the closed-loop Vector control with sensor (VC) the frequency inverter should first be operated with V/f control (p1300 = 0). When the motor is spinning and the speed encoder connected (activated using p0400), parameters r0061 and r0021 must match one another as far as the following quantities are concerned:

- Sign
- Absolute value (a deviation of a few percent is permitted)

The closed-loop Vector control with sensor (encoder) (p1300 = 21 or 23) may only be activated if both conditions are fulfilled.

Too short ramp times (P1120 and 1121) can cause F90, encoder feedback loss).

Note

If the encoder is incorrectly connected, incorrect values will be displayed in r0061, r0063, r0021 and r0022

5.8.2 Encoder Fault Codes

Description

The Encoder Interface has only one fault code, – F0090. This condition occurs when the allowed frequency rate of change, set in P0492[3] is exceeded or when low speed encoder loss is detected.

Note

The reason for the encoder loss will be given in the level 3 parameter r0949:

r0949 = 1 - Encoder loss detected due to sudden speed change (i.e. speed change detected on the encoder in a single scan > value in P0492).

r0949 = 2 - Encoder signal lost whilst running at low speed.

r0949 = 7 - Encoder loss detected due to motor stalled.

⚠ CAUTION

Optimum signal clarity is achieved when differential wiring is used between the encoder and encoder module. This is especially useful when situated in a noisy environment or with long cables – however, the module will function correctly both with single ended or differential wiring and as such can tolerate a wire break when differential wiring is used. If the module loses the complete signal on either A or B lines, the inverter will report F0090.

Remedial action on fault condition

Should the encoder give a fault message F0090 the following remedial action should be performed:

1. Check that an encoder is fitted. If the encoder is not fitted, set P0400 = 0 and select SLVC mode (P1300 = 20 or 22).
2. Check the connections between the encoder and the inverter.
3. Check the encoder is not faulty (select P1300 = 0 and run at a fixed speed then check the encoder feedback signal using r0061). Check for correct magnitude and direction of speed.
4. Increase the encoder loss threshold in P0492.
5. Increase encoder low speed loss detection delay in P0494.

5.9 Parameters

Overview of parameters

The inverter is adapted to a particular application using the corresponding parameters. This means that each parameter is identified by a parameter number and specific attributes (e.g. monitoring parameter, write parameter, BICO attribute, group attribute etc.). Within any one particular inverter system, the parameter number is unique.

Parameters can be accessed using the following operator units:

- BOP
- PC-based commissioning (start-up) tool STARTER.

There are two main types of parameters; those that can be altered and those that are read-only.

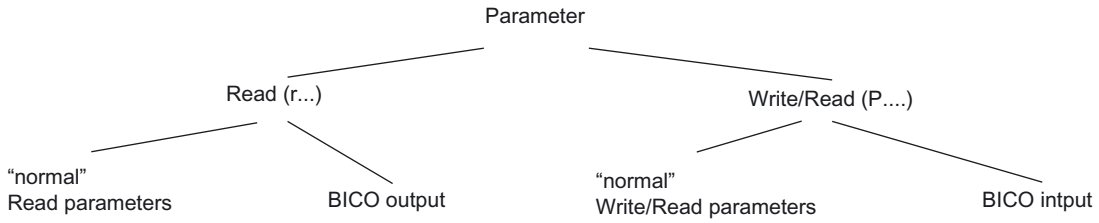

Figure 5-4 Parameter types

5.9.1 Write parameters

Description

Parameters which can be written into and displayed are indicated by the prefix "P".

These parameters directly influence the behavior of a function. The value of this parameter is saved in non-volatile memory (EEPROM) as long as the appropriate option was selected (non-volatile data save). Otherwise, these values are saved in the volatile memory (RAM) of the processor, which are lost after power failure or power-off/power-on operations.

Examples of the standard notation used throughout our manuals is given below.

Notation examples:

P0970	parameter 970
P0748.1	parameter 748, bit 01
P0819[1]	parameter 819 index 1
P0013[0 ... 19]	parameter 13 with 20 indices (indices 0 to 19)

5.9.2 Monitoring parameters

Description

Parameters which can only be monitored are indicated by the prefix "r".

These parameters are used to display internal quantities, for example states and actual values.

Notation examples:

r0002	monitoring parameter 2
r0052.3	monitoring parameter 52, bit 03
r0947[2]	monitoring parameter 947 index 2
r0964[0 ... 4]	monitoring parameter 964 with 5 indices (indices 0 to 4)

5.9.3 Parameter Attributes

Overview

In the Parameter Manual, the header line of each parameter shows all the attributes and groups for that specific parameter. The figure below shows the details for parameter P0700 and r1515.

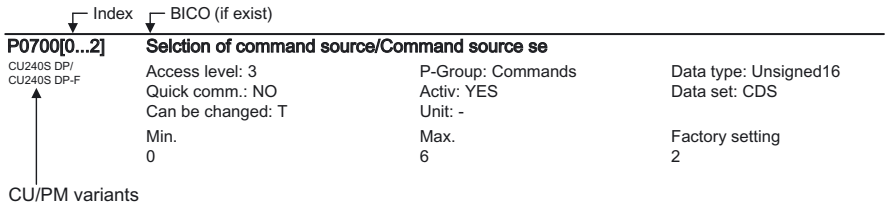

Figure 5-5 Description of attributes for parameter P0700

Figure 5-6 Description of attributes for parameter r1515

Index

Using the index, a parameter (e.g. p0013[20]) is defined with several consecutive elements (in this case, 20). Each individual index is defined using a numerical value.

When transferred to a parameter this means that an indexed parameter can have several values. The values are addressed using the parameter number including the index value (e.g. p0013[0], p0013[1], p0013[2], p0013[3], p0013[4], ...).

Indexed parameters are used, for example:

- Drive Data Sets (DDS)
- Command Data Sets (CDS)
- Sub functions.

BICO

The following types of connectable parameters are available. A description of BICO technology is given in the section "BICO Technology".

Table 5- 15 Parameter attributes - BICO

BICO	Description
BI	Binector Input
BO	Binector Output
CI	Connector Input
CO	Connector Output
CO/BO	Connector Output/Binector Output

Access level

The access level is controlled using parameter P0003. In this case, only those parameters are visible at the BOP, where the access level is less than or equal to the value assigned in parameter P0003. On the other hand, for STARTER, only access levels 0 and 3 are relevant. For example, parameters with access level 3 cannot be changed, if the appropriate access level has not been set.

The following access levels are implemented in the inverters:

Table 5- 16 Parameter attributes - access level

Access level	Description
0	User-defined Parameter Manual (refer to P0013)
1	Standard access to the most frequently used parameters
2	Extended access, e.g. to inverter I/O functions
3	Expert access only for experienced users
4	Service access only for authorized service personnel – with password protection.

Note

In STARTER, all user parameters (access stage 3) are always displayed using the expert list – independent of the setting p0003 = 0, 1, 2 or 3.

When changing parameters using STARTER, or via a higher-level control system, parameter value changes always become immediately effective.

Can be changed

"P" parameters can only be changed depending on the inverter state. The parameter value is not accepted if the instantaneous state is not listed in the parameter attribute "Can be changed". For instance, the quick commissioning parameter P0010 with the attribute "CT" can only be changed in quick commissioning "C" or ready "T" but not in operation "U".

Table 5- 17 Parameter attributes - Can be changed

State	Description
C	Quick commissioning
U	Operation (Drive running)
T	Drive ready to run

Data types

The data type of a parameter defines the maximum possible value range. Five data types are used for the inverter. They either represent an unsigned integer value (U16, U32) or a floating-point value (float). The value range is frequently restricted by a minimum and maximum value (min, max) or using inverter/motor quantities.

Table 5- 18 Parameter attributes - Data types

Data type	Description
U16	Unsigned, integer value with a size of 16 bits
U32	Unsigned, integer value with a size of 32 bits
I16	Signed integer 16-bit value
I32	Signed integer 32-bit value
Float	A simple precise floating point value according to the IEEE standard format max. value range: -3.39e+38 –+3.39e+38

Unit

The values of parameters support the following units:

Table 5- 19 Parameter attributes - Unit

Unit	Description	Unit	Description
-	No dimension	m/s	Meters per second
%	Percentage	Nm	Newton meter
A	Ampere	W	Watt
V	Volt	kW	Kilowatt
Ohm	Ohm	Hp	Horse power
us	Microseconds	kWh	Kilowatt hours
ms	Milliseconds	°C	Degrees Celsius
s	Seconds	m	Meter
Hz	Hertz	kg	Kilograms
kHz	Kilohertz	°	Degrees (angular degrees)
1/min	Revolutions per minute [RPM]		

Grouping

The parameters are sub-divided into groups according to their functionality. This increases the transparency and allows a quicker and more efficient search for specific parameters. Furthermore, parameter P0004 can be used to control the specific group of parameters that are displayed on the BOP.

Table 5- 20 Parameter attributes - Grouping

Grouping	Description		Main parameter area:
ALWAYS	0	all parameters	
INVERTER	2	inverter parameters	0200 … 0299
MOTOR	3	motor parameters	0300 … 0399 and 0600 … 0699
ENCODER	4	speed encoder	0400 … 0499
TECH_APL	5	technical applications/units	0500 … 0599
COMMANDS	7	control commands, digital I/O	0700 … 0749 and 0800 … 0899
TERMINAL	8	Analog inputs/outputs	0750 … 0799
SETPOINT	10	Setpoint channel and ramp-function gen.	1000 … 1199
Safety integrated	11	Fail-safe functions	9000 … 9999
FUNC	12	Inverter functions	1200 … 1299
CONTROL	13	Motor open-loop/closed-loop control	1300 … 1799
COMM	20	Communications	2000 … 2099
ALARMS	21	Faults, warnings, monitoring functions	0947 … 2199
TECH	22	Technology controller (PID controller)	2200 … 2399

Active

This attribute is only of importance in conjunction with an BOP. The "Yes" attribute indicates that this value is immediately accepted when it is changed. Especially parameters which are used for optimization functions have this property (e.g. constant voltage boost P1310 or filter time constants). On the other hand, for parameters with the attribute "First confirm", the value is only accepted after first pressing the key P. These include, for example, parameters where the parameter value can have different settings/meanings (e.g. selecting the frequency setpoint source P1000).

Table 5- 21 Parameter attributes - Active

Active	Description
Yes	The value becomes valid immediately.
First confirm	The value becomes valid after pressing P

Note

Parameter values that are changed using STARTER or a higher-level control do not have to be acknowledged.

Quick commissioning

This parameter attribute identifies as to whether the parameter is included in the quick commissioning (QC) (P0010 = 1).

Table 5- 22 Parameter attributes - Quick commissioning

QC	Description
No	The parameter is not included in the quick commissioning
Yes	The parameter is included in the quick commissioning

Value range

The value range, which is first specified by the data type, is restricted by minimum and maximum values depending on the quantities of the inverter/motor. The values min and max are permanently saved in the inverter and cannot be changed by the user. To support commissioning each write parameter has a default value called factory setting.

Table 5- 23 Parameter attributes - Value range

Value range	Description
-	No value entered (e.g.: "r parameter")
Min	Minimum value
Max	Maximum value
Def	Default value

Data sets

A detailed description for the data sets is given in the respective section

Table 5- 24 Data sets

BICO	Description
CDS	Command data set
DDS	Drive data set

5.10 Start-up and Swap Behavior of the Inverter

Overview

When starting-up the inverter checks, whether an MMC is plugged in or not.

If it is plugged and no swap has been taken place the start-up runs according the "Normal start-up behavior". If a component (CU or PM) has been replaced, this is called a swap and the start-up will be performed according the "Swap behavior" of the inverter.

5.10.1 Normal Start-up Behavior of the Inverter

Description

A normal start-up is a start-up after a power-cycle or a black-out. It can be performed with or without MMC.

Normal start-up behavior without MMC

After a power-cycle or a black-out the inverter reads the parameters from EEPROM to RAM.

Normal start-up behavior with MMC

The CU detects automatically whether an MMC is present.

The start-up behavior is controlled using P8458 as follows:

P8458 = 0:	No automatic parameter download from the MMC.
P8458 = 1:	Automatic parameter download from the MMC only once (at the next start-up of the CU (default setting)). After the download P8458 is set to 0, to prohibit any further automatic download of parameters.
P8458 = 2:	Automatic parameter download from the MMC (if present) after each start-up of the control unit.

Once the download has been finished, the MMC can be withdrawn. If no MMC is plugged in, the inverter will start-up with the parameters stored in the EEPROM without an alarm or fault message, even if P8458 is set to 1 or 2.

Note

MMC for "automatic download"

For an automatic download always the file clone00.bin will be used.

The user has to take care, that clone00.bin (saved as "clone00.bin" with STARTER via PC or via setting P0804 = 00 with the BOP) is available on the MMC under /USER/SINAMICS/DATA/clone00.bin, used for an automatic parameter download at start-up. If clone00.bin does not exist drive will fail with F0064.

Successful automatic download

After a successful automatic download, F0395 will be displayed.

- In case of a standard CU a confirmation is necessary.
- In the case of CUs with fail-safe functions, an acceptance test must be performed.

Confirmation

On standard CUs the current parameter set needs to be checked and its correctness confirmed by clearing F0395. This can be done via:

- Digital input or PLC signal (depends on the settings of P0700)
- Setting P7844 = 0.
- Via the key FN on the BOP

> ⚠ WARNING
>
> The user is responsible for ensuring that the parameters held in the CU are the correct parameters for their application.

Acceptance test

On CUs with fail-safe functions it is necessary to do an acceptance test (refer to the "Fail-safe functions" section in this manual). To clear F0395 on CUs with fail-safe functions the following procedure has to be followed:

- P0010 = 30
- P9761 = safety password
- P7844 = 0
- Carry out acceptance test

Automatic download fault

If the automatic download process fails, the CU will return to the parameter set previously held in the EEPROM and one of the following fault codes will be generated:

Table 5- 25 Automatic download fault codes

Fault code	Description
F0061	Automatic download of parameters was not successful.
F0063	Automatic download of parameters was not successful (e.g. wrong CU).

In this case check, whether the MMC is defective, a parameter set clone00.bin is available, or the parameter set is valid.

> NOTICE
>
> After upload and download of parameters between differing Control Units, the parameter settings must be checked.
>
> Parameter download from a different CU might fail with F0063 if parameters cannot be downloaded (Check r0949 for the (first) parameter number which cannot be downloaded).
>
> If F0061 or F0063 occurs during startup it cannot be cleared except via a power cycle.

5.10.2 Swap Behavior of the Inverter

Overview

This section describes the possibilities to exchange inverter components, power modules or control units, and the necessary actions, depending on the swap type.

The following swaps are allowed:

- CU Swap (neither PM nor CU powered)
- PM Swap (neither PM nor CU powered)
- PM Swap (CU externally powered)

CU Swap, PM Swap (neither PM nor CU powered) - MMC with valid Parameter set plugged

- Swap after power on detected, Parameter MMC -> RAM, inverter runs into F00395

⚠ CAUTION
If the parameter download MMC -> RAM fails, one of the following faults will be generated: F0061, F0062, F0063 or F0064, details see parameter list.

- With confirming F00395 RAM values will be written to the EEPROM and with a standard CU operation is possible, in case of a fail-safe CU an acceptance test is required.

CU Swap, PM Swap (neither PM nor CU powered) - no MMC plugged

- Swap after power on detected, Parameter EEPROM -> RAM, inverter runs into F00395
- Commissioning recommended - otherwise inverter runs with parameter settings from EEPROM
- Confirmation for standard CU or acceptance test in case of fail-safe CU required

PM Swap (CU externally powered) - MMC with valid Parameter set plugged

- Swap detected, Parameter MMC -> RAM, inverter runs into F00395

> ⚠ CAUTION
>
> If the parameter download MMC -> RAM fails, one of the following faults will be generated: F0061, F0062, F0063 or F0064, details see parameter list.

- With confirming F00395 RAM values will be written to the EEPROM and with a standard CU operation is possible, in case of a fail-safe CU an acceptance test is required.

PM Swap (CU externally powered) - no MMC plugged

- Swap detected, Parameter EEPROM -> RAM, inverter runs into F00395
- If the parameters, already held in the EEPROM are ok there is no commissioning necessary.
- Confirmation for standard CU or acceptance test in case of fail-safe CU required

> **Note**
>
> After a PM Swap without MMC the parameter settings only stored in RAM will be lost.

Rules regarding a swap

> **Note**
>
> F00395 cannot be cleared via power cycle.
>
> F00061, F00062, F00063 and F00064 can only be cleared via power cycle.

There are a number of scenarios where a swap is allowed, each with their own unique set of conditions that must be observed.

> ⚠ DANGER
>
> **Do not attempt to hot swap a power module (PM)**
>
> Before attempting to swap a PM it must be fully powered-down. Any attempt to swap-out a PM when power is still applied could result in death of personnel and severe damage to property and equipment.

> ⚠ WARNING
>
> **Swap restrictions**
>
> Before performing a swap it is the responsibility of the user to ensure that:
>
> - only CUs of the same type are swapped
> - the MMC contains a valid parameter set (a valid parameter set means, it is not from a different type of CU e.g. CU240S DP and CU240S or fail-safe and standard CUs)
> - only PMs of the same type and power rating are swapped.
> - the application is in a safe state before any swap of equipment is performed.

CU Swap

CAUTION
Data set compatibility To ensure complete data set compatibility, it is recommended to perform an upload of the parameter set from the CU to a new MMC prior to swapping the CU.

The following procedure is given as a guide to perform a swap of a CU.

Before performing a CU Swap take care of the following:

1. The PM is powered-down and disconnected.
2. Wait 5 minutes to allow the unit to discharge after switching off the line supply.
3. Remove the two-part terminals that are actually wired on the CU.
4. Remove the MMC (if available).
5. Remove the CU from the PM.

Before switching on power supply to the inverter take care of that:

1. Fit the new CU to the PM.
2. Reconnect the two-part terminals to the CU.
3. Insert the MMC (if available) into the MMC-slot of the CU.

PM Swap

⚠ CAUTION
To ensure complete data set compatibility, make sure that all parameters are stored in the EEPROM of the Control Unit (see P0014 or P0971) prior to swapping the PM).

Before performing a PM Swap take care of the following:

1. The PM is powered-down and disconnected.
2. Wait 5 minutes to allow the unit to discharge after switching off the line supply.

Before switching on Power supply take care that:

1. The new PM is properly installed and connected.
2. The CU is fitted back on the PM.

Communication 6

6.1 PROFIdrive Profile V4.1

6.1.1 Use Data Structure as Defined in PROFIdrive Profile V4.1

Introduction

The SINAMICS G120 range of inverters can be controlled through the cyclical PROFIBUS DP channel or the acyclic DPV1 channel. The structure of use data for the cyclic/acyclic channel for is defined in the PROFIdrive Profile, version V4.1.

The PROFIdrive profile defines the inverters, the use data structure with which a master can access the inverters (slaves) using the cyclic or acyclic data communication method.

Note

PROFIdrive for drive technology is standardized and described in the following document:
References: /P5/ PROFIdrive Profile Drive Technology

Telegram data structure

The use data structure for cyclical data traffic is divided into two areas which can be transmitted in each telegram:

- Process data area (PZD)

  Process data includes control words (status information) and setpoints (actual values). Process data are transmitted in the process data area.

  The transferred process data do not take effect until the bits used in the control words, setpoints, status words and actual values have been routed in the inverter.

- Parameter channel

  This area is reserved for reading/writing parameter values.

  This telegram section is used to monitor and/or change any parameter in the inverter. For further information to the parameter channel, refer the Function Manual.

Parameter channel				Process data area (PZD)									
PKE	IND	PWE		PZD01 STW1 ZSW1	PZD02 HSW HIW	PZD 03	PZD04	PZD05	PZD06	PZD07	PZD08	PZD09	PZD1 0
1st word	2nd word	3rd word	4th word	1st word	2nd word	3rd word	4th word	5th word	6th word	7th word	8th word	9th word	10th word

PZD:	Process data	STW:	Control word 1
PKE:	Parameter identifier	ZSW:	Status word 1
IND:	Index	HSW:	Main setpoint
PWE:	Parameter value	HIW:	Main actual value

6.1.2 Data Structure of the Parameter Channel

Description

The PROFIdrive profile V4.1 defines for the inverters, the use data structure with which a master can access the inverters (slaves). The parameter channel telegram section can be used to monitor and/or change any parameter in the inverter.

Parameter channel

Using the parameter channel process data can be processed and monitored (write/read) as described below. The parameter channel includes always 4 words.

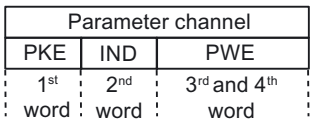

Abbreviations: PKE : Parameter identifier
IND : Index
PWE: Parameter value

Figure 6-1 Structure of the parameter channel in the telegram structure

Parameter identifier (PKE), 1st word

The parameter identifier (PKE) is always a 16-bit value.

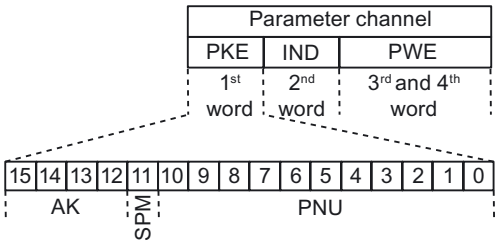

Figure 6-2 PKE structure

- Bits 0 to 10 (PNU) contain the remainder of the parameter number (value range 1 to 61999).

For parameter numbers ≥ 2000 it is necessary to add an offset which is defined with the high byte bits (acyclic) or the low byte bits (cyclic) of IND.

- Bit 11 (SPM) is reserved and always = 0.
- Bits 12 to 15 (AK) contain the request or the response identifier.

The meaning of the request identifier for request telegrams (master → inverter) is shown in the table below.

Table 6- 1 Request identifier (master → inverter)

Request identifier	Description	Response identifier	
		positive	negative
0	No request	0	7 / 8
1	Request parameter value	1 / 2	↑
2	Modify parameter value (word)	1	|
3	Modify parameter value (double word)	2	|
4	Request descriptive element 1)	3	|
6	Request parameter value (array) 1)	4 / 5	|
7	Modify parameter value (array, word) 1)	4	|
8	Modify parameter value (array, double word) 1)	5	|
9	Request number of array elements	6	|
11	Modify parameter value (array, double word) and store in EEPROM 2)	5	|
12	Modify parameter value (array, word) and store in EEPROM 2)	4	|
13	Modify parameter value (double word) and store in EEPROM	2	↓
14	Modify parameter value (word) and store in EEPROM	1	7 / 8
1) The desired element of the parameter description is specified in IND (2nd word) 2) The desired element of the indexed parameter is specified in IND (2nd word)			

The meaning of the response identifier for response telegrams (inverter → master) is shown in the table below. The request identifier will determine which response identifiers are possible.

Table 6- 2 Response identifier (inverter → master)

Response identifier	Description
0	No response
1	Transfer parameter value (word)
2	Transfer parameter value (double word)
3	Transfer descriptive element 1)
4	Transfer parameter value (array word) 2)
5	Transfer parameter value (array double word) 2)
6	Transfer number of array elements
7	Cannot process request, task cannot be executed (with error number)
8	No master control status / no parameter change rights for PARAMETER CHANNEL interface
1) The desired element of the parameter description is specified in IND (2nd word) 2) The desired element of the indexed parameter is specified in IND (2nd word)	

If the response identifier is 7 (cannot process request), then one of the fault numbers listed in the next table will be stored in parameter value 2 (PWE2).

Table 6- 3 Fault numbers for "Cannot process request" response

No.	Description	Remarks
0	Illegal parameter number (PNU)	Parameter does not exist
1	Parameter value cannot be modified	Parameter is a read-only parameter
2	Minimum/maximum not reached/exceeded	–
3	Faulty subindex	–
4	No array	Single parameter has been accessed with array request and subindex > 0
5	Parameter type is wrong / incorrect data type	Mix-up between word and double word
6	Setting not allowed (resetting only)	–
7	Descriptive element cannot be modified	Description can never be modified
11	No status as master control	Modification request without status as master control (see P0927)
12	Key word missing	–
17	Request cannot be processed due to operating state	Current inverter status is not compatible with the received request
101	Parameter number currently deactivated	Dependent on inverter status
102	Channel not wide enough	Communication channel too small for response
104	Illegal parameter value	Parameter permits only certain values
106	Request not implemented / Task not supported	After request identifier 5, 10, 15
200/201	Modified minimum/maximum not reached/exceeded	Minimum/maximum can be further limited in operation
204	Available access authorization does not cover modification of parameters	–

Parameter index (IND) 2nd word

The array subindex is in the PROFIdrive Profile referred to simply as "subindex".

Structure for acyclical communication

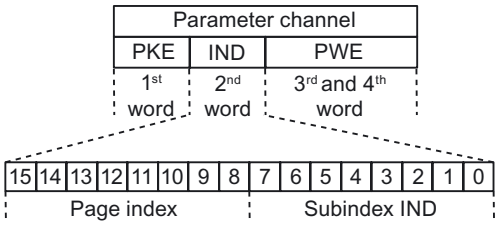

Figure 6-3 IND structure acyclic

- The array subindex is an 8-bit value which is in acyclical data exchange mode transferred in the low-order byte (bits 0 to 7) of the parameter index (IND).
- The parameter page selection task for additional parameters is performed in this case by the high-order byte (bits 8 to 15) of the parameter index. This structure conforms to the USS specification.

  Example: Coding for parameter no. in PKE and IND for "P2016, Index 3".

PKE		IND		PWE1		PWE2	
xx	10	80	03				

Structure for cyclical communication

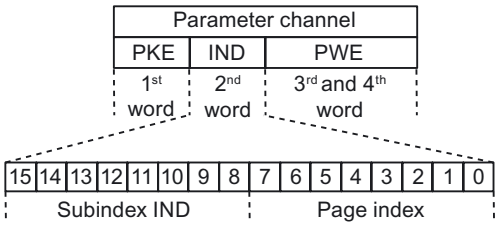

Figure 6-4 IND structure cyclic

- The array subindex is an 8-bit value which is in cyclical data exchange mode transferred in the high-order byte (bits 8 to 15) of the parameter index (IND).
- The parameter page selection task for additional parameters is performed in this case by the low-order byte (bits 0 to 7) of the parameter index.

Regulation for the parameter range

The bit for parameter page selection functions as follows:

If it is set to 1, an offset of 2000 is applied in the inverter to the parameter number (PNU) transferred in the parameter channel request before it is passed on.

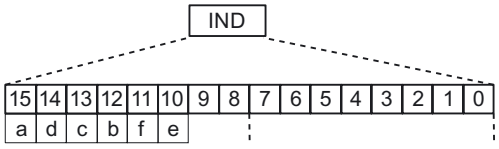

Figure 6-5 IND page index acyclic

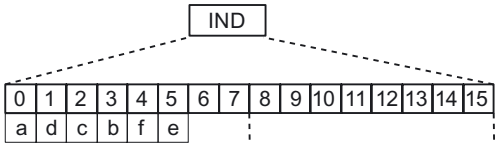

Figure 6-6 IND page index cyclic

Table 6- 4 Regulation for setting the PNU

Parameter range	Page index						Bit		Hex value	+ PNU
	a	d	c	b	f	e	9	8		
0000 … 1999	0	0	0	0	0	0	0	0	0x00	0 – 7CF
2000 … 3999	1	0	0	0	0	0	0	0	0x80	0 – 7CF
4000 … 5999	0	0	0	1	0	0	0	0	0x10	0 – 7CF
6000 … 7999	1	0	0	1	0	0	0	0	0x90	0 – 7CF
8000 … 9999	0	0	1	0	0	0	0	0	0x20	0 – 7CF
…	…	…	…	…	…	…	…	…	…	…
32.000 … 33.999	0	0	0	0	0	1	0	0	0x04	0 – 7CF
…	…	…	…	…	…	…	…	…	…	…
64.000 … 65.999	0	0	0	0	1	0	0	0	0x08	0 – 7CF

Table 6- 5 Example coding for parameter no. in PKE and IND for P8820, Index 16

	PKE		IND	
decimal	xx	820	32	16
hex	xx	334	20	10

Parameter value (PWE) 3rd and 4th word

In case of PROFIBUS or PROFINET communication the parameter value (PWE) is always transmitted as a double word (32-bit). Only one parameter value at a time can be transferred in a telegram.

A 32-bit parameter value comprises PWE1 (high-order word, 3rd word) and PWE2 (low-order word, 4th word).

A 16-bit parameter value is transferred in PWE2 (low-order word, 4th word). PWE1 (high-order word, 3rd word) must be set to 0 on the PROFIBUS-DP master / PROFInet I/O controller in this case.

Note

In case of communication via USS, you can configure the word length in P2013. For details, refer the section "Communication via USS".

Rules for processing requests/responses

- A request or a response can only ever refer to one parameter.
- The master must repeat a request continuously until it has received the appropriate response.
- The master detects the response to a request it has sent by
  - evaluating the response identifier,
  - evaluating the parameter number PNU,
  - evaluating the parameter index IND if necessary, or
  - evaluating the parameter value PWE if necessary.
- The complete request must be sent in one telegram. Request telegrams cannot be split. The same applies to responses.
- In the case of response telegrams which contain parameter values, the drive always returns the current parameter value when repeating response telegrams.

6.2 Cyclic Communication

Telegrams

The selection of a telegram via P0922 determines on the drive unit side which process data is transferred between master and slave.

From the perspective of the slave, there are receive words and send words.

The receive and send words comprise the following elements:

- Receive words Control words or setpoints
- Send words Status words or actual values

Used telegram types

The following telegrams can be set via parameter P0922:

Standard telegrams

The standard telegrams are structured in accordance with the PROFIdrive Profile. The internal process data links are set up automatically in accordance with the telegram number setting.

- Telegram 1 Speed control, 2 words
- Telegram 20 Speed control, VIK/NAMUR

Manufacturer-specific telegrams

The manufacturer-specific telegrams are structured in accordance with internal company specifications. The internal process data links are set up automatically in accordance with the telegram number setting.

- Telegram 350 Speed control, 4 words
- Telegram 352 Speed control, PCS7
- Telegram 353 Speed control, PKW 4/4 and PCD 2/2
- Telegram 354 Speed control, PKW 4/4 and PCD 6/6

Device-specific telegrams

The send and receive telegrams can be configured as required by using BICO technology to interconnect the send and receive process data.

- Telegram 999 Free interconnection via BICO (up to 8 data words)

6.2.1 Standard Telegram Structure

BICO connection

When a telegram is selected, the corresponding BICO connection parameters will be fixed and cannot be changed (except P0701 and the following digital inputs). If P0922 = 999, it keeps the actual BICO connection parameters but now BICO parameters can be changed.

Telegram structure and settings of P0922

Table 6- 6 Standard telegrams from 1 to 999

Telegramm	Parameter channel	Process data area (PZD)							
		PZD01 STW1 ZSW1	PZD 02 HSW HIW	PZD 03	PZD 04	PZD 05	PZD 06	PZD 07	PZD 08
Telegram 1 Speed control, 2 words	-	STW1	NSOLL_A	⇐ Receive telegram from PROFIBUS					
		ZSW1	NIST_A	⇒ Send telegram to PROFIBUS					
Telegram 20 Speed control, VIK/NAMUR	-	STW1	NSOLL_A						
		ZSW1	NIST_A_ GLATT	IAIST	MIST	PIST	<1>		
Telegram 350 Speed control, 4 words	-	STW1	NSOLL_A	M_LIM	STW2				
		ZSW1	NIST_A_ GLATT	IAIST_	ZSW2				
Telegram 352 Speed control, PCS7	-	STW1	NSOLL_A	<3>	<3>	<3>	<3>		
		ZSW1	NIST_A_ GLATT	IAIST	MIST	FAULT_ CODE	WARN_ CODE		
Telegram 353 Speed control, PKW 4/4 and PCD 2/2	X	STW1	NSOLL_A						
	X	ZSW1	NIST_A_ GLATT						
Telegram 354 Speed control, PKW 4/4 and PCD 6/6	X	STW1	NSOLL_A	<3>	<3>	<3>	<3>		
	X	ZSW1	NIST_A_ GLATT	IAIST	MIST	FAULT_ CODE	WARN_ CODE		
Telegram 999 Free interconnection via BICO	-	STW1 <1>	Receive telegram length is max. 8 words. It can be freely selected via the central PROFIBUS configuring, e. g. HW Config (universal modul in GSD) <2>						
		ZSW1 <1>	Send telegram length is max. 8 words. It can be freely selected via the central PROFIBUS configuring, e. g. HW Config (universal modul in GSD) <2>						

<1> In order to comply with the PROFIdrive profile, PZD1 must be used as STW1 or ZSW1
<2> Structure like a standard telegram
<3> Placeholder for PCS7 process data

STW1/2 (r2090/r2091)	Control word 1/2	MIST (r0031)	Torque actual value
ZSW1/2 (r0052/r0053)	Status word 1/2	PIST (r0032)	Active Power
NSOLL_A *) (P1070)	Speed setpoint A (16 bit)	M_LIM (P1522)	Torque limit
NIST_A *) (r0021)	Speed actual value A (16 bit)	FAULT_CODE (r2131)	Fault code
IA_IST (r0027)	Output current	WARN_CODE (r2132)	Warn code

*) NSOLL_A, NIST_A are FSOLL and FIST for SINAMICS G120

6.2.2 VIK/NAMUR Telegram Structure

Description

Table 6- 7 VIK/NAMUR telegram structure

Telegram	Parameter channel	Process data area (PZD)							
		PZD01 STW1 ZSW1	PZD 02 HSW HIW	PZD 03	PZD 04	PZD 05	PZD 06	PZD 07	PZD 08
Telegramm 20 Speed control, VIK/NAMUR	-	STW1	NSOLL_A						
	-	ZSW1	NIST_A_ GLATT	IAIST	MIST	PIST	<1>		
<1> In order to comply with the PROFIdrive profile, PZD1 must be used as STW1 or ZSW1									
STW1/2 (r2090/r2091) ZSW1/2 (r0052/r0053) NSOLL_A *) (P1070) NIST_A *) (r0021) IA_IST (r0027) MIST (r0031) PIST (r0032)		Control word 1/2 Status word 1/2 Speed setpoint A (16 bit) Speed actual value A (16 bit) Output current Torque actual value Active Power							
*) NSOLL_A, NIST_A are FSOLL and FIST for SINAMICS G120									

If VIK/NAMUR telegram is selected with P0922 = 20, the parameter P2038 "Selection of actual profile" will be set to VIK/NAMUR automatically.

It is also necessary to set the ident number (GSD) via parameter P2042:

- SIMATIC Object Manager (Slave-OM)

  For drives configured with SIMATIC Object Manager (Slave-OM) parameter P2042 has to be set to 0 (default).

- VIK/NAMUR GSD (Device Data File)

  For all other configurations the setting of parameter P2042 must be changed to 1 (NAMUR). That means that the VIK/NAMUR ID of the PROFIBUS Nutzerorganisation (PNO) will be send to the PLC.

Note

If changing PROFIBUS standard telegrams to VIK/NAMUR telegram or back (parameters: P0922, P2038 and P2042) the drive ID is changed. A power cycle is necessary for the Control Unit CU240S to take the changed drive ID effective.

To change back from VIK/NAMUR to Standard telegrams it is necessary to set P0922 = 999 (Free BICO connection) and then reset P2038 and P2042 to PROFIdrive Profile. If P0922 = 999, it keeps the actual BICO connection parameters but now BICO parameters can be changed.

6.2.3 PROFIsafe Telegram Structure

Description

The fail-safe functions can be triggered via the fail-safe digital inputs FDI0 and FDI1 or via PROFIsafe signals (see P9603 and 9803).

To use PROFIsafe for triggering the fail-safe functions the G120 GSD file must be installed in the control system e.g. SIMATIC S7.

Input and output address, 6 byte each (input and otuput address are identical)

- Byte 0 (process data 0), Bit 0: **STO** 0 = selected 1 not selected
- Byte 0 (process data 0), Bit 1: **SS1** 0 = selected 1 not selected
- Byte 1 (process data 1), Bit 0: **SLS** 0 = selected 1 not selected

Table 6- 8 Intput addresses for PROFIsafe signals

	Address	Function
1	E 0.0	STO bit from inverter
2	E 0.1	SS1 bit from inverter
	…	
9	E 1.0	SLS bit from inverter

Table 6- 9 Output addresses for PROFIsafe signals

	Address	Function
1	A 0.0	STO bit to inverter
2	A 0.1	SS1 bit to inverter
	…	
9	A 1.0	SLS to from inverter

6.2.4 Switch over behavior of Communication telegram

Overview

When switching over the communication telegram, a number of paramaters values is changed simultanously.

The following parameters might be concerned:

- P0820/P0821: Select Drive Data Set
- P1035: MOP up source
- P1036: MOP down source

For details refer to the following table

Notes to the tables:

- P0700 =1 => Commands via BOP
- P0700 = 2: => Commands via Terminals
- P0700 = 4: => Commands via USS on RS232
- P0700 = 6: => Commands via Fieldbus,
  - PROFIBUS: P2090 (control word 1) and P2091 (control word 2)
  - PROFInet: P8890 (control word 1) and P8891(control word 2)

Table 6- 10 Switch over behavior of telegram structures, Part 1

P0922 =	1 → 20 if P0700 =			1 → 350 if P0700 =		1 → 352/354 if P0700 =		1 → 999/353 if P0700 =	
	1, 2	4	6	1, 2, 4	6	1, 2, 4	6	1, 2, 4	6
P0820 =	no change	2013.15	2090.15 8890.15	no change	2091.4 8891.4	no change	no change	no change	no change
P0821 =	no change	no change	no change	no change	2091.5 8890.15	no change	no change	no change	no change
P1035 =	19.13	19.13	19.13	no change	2090.13 8890.13	no change	2090.13 8890.13	no change	no change
P1036 =	19.14	19.14	19.14	no change	2090.14 8890.14	no change	2090.14 8890.14	no change	no change

Table 6- 11 Switch over behavior of telegram structures, Part 2

P0922 =	20 → 1/353 if P0700 =		20 → 350 if P0700 =		20 → 352/354 if P0700 =		20 → 999 if P0700 =	
	1, 2, 4	6	1, 2, 4	6	1, 2, 4	6	1, 2, 4	6
P0820 =	0.0	0.0	no change	2091.4 8891.4	0.0	0.0	no change	no change
P0821 =	no change	no change	no change	2091.5 8891.5	no change	no change	no change	no change
P1035 =	no change	2090.13 8890.13	no change	2090.13 8890.13	no change	2090.13 8890.13	no change	no change
P1036 =	no change	2090.14 8890.14	no change	2090.14 8890.14	no change	2090.14 8890.14	no change	no change

Table 6- 12 Switch over behavior of telegram structures, Part 3

P0922 =	350 → 1/353 if P0700 =		350 → 20 if P0700 =			350 → 352/354 if P0700 =		350 → 999 if P0700 =	
	1, 2, 4	6	1, 2	4	6	1, 2, 4	6	1, 2, 4	6
P0820 =	no change	0.0	no change	2013.15	2090.15 8890.15	no change	0.0	no change	no change
P0821 =	no change	0.0	0.0	0.0	0.0	no change	0.0	no change	no change
P1035 =	no change	2090.13 8890.13	19.13	19.13	19.13	no change	2090.13 8890.13	no change	no change
P1036 =	no change	2090.14 8890.14	19.14	19.14	19.14	no change	2090.14 8890.14	no change	no change

Table 6- 13 Switch over behavior of telegram structures, Part 4

P0922 =	352 → 1/353 if P0700 =		352 → 20 if P0700 =			352 → 350 if P0700 =		352 → 999/354 if P0700 =	
	1, 2, 4	6	1, 2	4	6	1, 2, 4	6	1, 2, 4	6
P0820 =	0.0	0.0	no change	2013.15	2090.15 8890.15	no change	2091.4 8891.4	no change	no change
P0821 =	no change	no change	no change	no change	no change	no change	2091.5 8891.5	no change	no change
P1035 =	no change	2090.13 8890.13	19.13	19.13	19.13	no change	2090.13 8890.13	no change	no change
P1036 =	no change	2090.14 8890.14	19.14	19.14	19.14	no change	2090.14 8890.14	no change	no change

Table 6- 14 Switch over behavior of telegram structures, Part 5

P0922 =	353 → 20 if P0700 =			353 → 350 if P0700 =		353 → 352/354 if P0700 =		353 → 999/1 if P0700 =	
	1, 2	4	6	1, 2, 4	6	1, 2, 4	6	1, 2, 4	6
P0820 =	no change	2013.15	2090.15 8890.15	no change	2091.4 8891.4	no change	no change	no change	no change
P0821 =	no change	no change	no change	no change	2091.5 8891.5	no change	no change	no change	no change
P1035 =	19.13	19.13	19.13	no change	2090.13 8890.13	no change	2090.13 8890.13	no change	no change
P1036 =	19.14	19.14	19.14	no change	2090.14 8890.14	no change	2090.14 8890.14	no change	no change

Table 6- 15 Switch over behavior of telegram structures, Part 6

P0922 =	354 → 1/353 if P0700 =		354 → 20 if P0700 =			354 → 350 if P0700 =		354 → 999/352 if P0700 =	
	1, 2, 4	6	1, 2	4	6	1, 2, 4	6	1, 2, 4	6
P0820 =	0.0	0.0	no change	2013.15	2090.15 8890.15	no change	2091.4 8891.4	no change	no change
P0821 =	no change	no change	no change	no change	no change	no change	2091.5 8891.5	no change	no change
P1035 =	no change	2090.13 8890.13	19.13	19.13	19.13	no change	2090.13 8890.13	no change	no change
P1036 =	no change	2090.14 8890.14	19.14	19.14	19.14	no change	2090.14 8890.14	no change	no change

Table 6- 16 Switch over behavior of telegram structures, Part 7

P0922 =	999 → 1/353 if P0700 =		999 → 20 if P0700 =			999 → 350 if P0700 =		999 → 352/354 if P0700 =	
	1, 2, 4	6	1, 2	4	6	1, 2, 4	6	1, 2, 4	6
P0820 =	0.0	0.0	no change	2013.15	2090.15 8890.15	no change	2091.4 8891.4	0.0	0.0
P0821 =	0.0	0.0[1)]	0.0	0.0[1)]	0.0[1)]	no change	2091.5 8891.5	0.0	0.0[1)]
P1035 =	no change	2090.13 8890.13	19.13	19.13	19.13	no change	2090.13 8890.13	no change	2090.13 8890.13
P1036 =	no change	2090.14 8890.14	19.14	19.14	19.14	no change	2090.14 8890.14	no change	2090.14 8890.14
1) This value is set, if you have switched from 350 to 999 before. Otherwise the value won't change.									

6.2.5 Control and status words

Description

The control and status words comply with the specifications for PROFIdrive Profile, version 4.1 for "Closed-loop speed control mode".

Control word 1 (STW1)

Control word 1 (bits 0 … 10 as per PROFIdrive Profile and VIK/NAMUR, bits 11 … 15 specific to SINAMICS G120).

Table 6- 17 Assignment control word 1

Bit	Val.	Meaning comment	P0922 = 20 (VIK/ NAMUR)	P0922 = 1 / 350 / 352 / 353 / 354 (PROFI drive Profile)
0	0	OFF1 Shutdown, deceleration along RFG ramp, pulse disable when f < f_{min}.	P0840 = 2090:0	P0840 = 2090:0
	1	ON Sets the inverter to the "Ready to run" state, direction of rotation must be defined via bit 11.		
1	0	Coast Stop (OFF2) Instantaneous pulse disable, drive coasts to a standstill	P0844 = 2090:1	P0844 = 2090:1
	1	No Coast Stop All Coast Stop (OFF2) commands are withdrawn.		
2	0	Quick Stop (OFF3) Rapid stop: Shutdown at fastest possible acceleration rate.	P0848 = 2090:2	P0848 = 2090:2
	1	No Quick Stop All Quick Stop (OFF3) commands are withdrawn.		
3	0	Disable Operation Closed-loop control and inverter pulses are disabled	P0852 = 2090:3	P0852 = 2090:3
	1	Enable Operation Closed-loop control and inverter pulses are enabled		
4	0	Reset Ramp Generator Output of RFG is set to 0 (fastest possible braking operation), inverter remains in the ON state.	P1140 = 2090:4	P1140 = 2090:4
	1	Enable Ramp Generator		
5	0	Freeze Ramp Generator Setpoint currently supplied by the RFG is "frozen".	P1141 = 2090:5	P1141 = 2090:5
	1	Unfreeze Ramp Generator		
6	0	Disable Setpoint Value selected at the RFG input is set to 0.	P1142 = 2090:6	P1142 = 2090:6
	1	Enable Setpoint Value selected at the RFG input is activated.		
7	1	Fault Acknowledge Fault is acknowledged with a positive edge, inverter then switches to "starting lockout" state.	P1024 = 2090:7	P1024 = 2090:7

Bit	Val.	Meaning comment	P0922 = 20 (VIK/ NAMUR)	P0922 = 1 / 350 / 352 / 353 / 354 (PROFI drive Profile)
8	0	**JOG 1 OFF** Drive brakes as quickly as possible.	P1055 = 2090:8	P1055 = 2090:8
	1	**JOG 1 ON** The drive runs up as quickly as possible to jogging setpoint (direction of rotation: CW).		
9	0	**JOG 2 OFF** Drive brakes as quickly as possible.	P1056 = 2090:9	P1056 = 2090:9
	1	**JOG 2 ON** The drive runs up as quickly as possible to jogging setpoint (direction of rotation: CCW).		
10	0	**No PLCControl** Process data not valid, expect Sign-Of-Life.	----	----
	1	**PLC Control** Control via interface, process data valid.		
11	0	**No Setpoint Inversion** Motor rotates CW in response to positive setpoint.	P1113 = 2090:11	
	1	**Setpoint Inversion** Motor rotates CCW in response to positive setpoint.		
12		Not used	Not used	Not used
13	1	**Motor potentiometer UP**	Not used	P1035 = 2090:13
14	1	**Motor potentiometer DOWN**		P1036 = 2090:14
15	1	Depends on the protocol On the SINAMICS G120 it is possible, using the function local/remote control, to change between the command data set (CDS) 0 and 1 of the control word 1 bit 15. This results in a switching of the command data sets. The command data set 0 is active in local operation and the command data set 1 for remote operation. Now in both command data sets the application-specific parameters for the command and target value sources can be set. *Note: In PROFIdrive Profile P0810 = 2090:15 must be set manually.	DDS1: P0820 = 2091.15	CDS1: P0810 = 2090:15*

An example

In the remote control operating mode the commands and target values come from a superior control system to the inverter by means of a PROFIBUS. By switching to local operation, the command and target value source is switched and operation is now performed locally on the system by means of digital inputs and the analog target values.

Local operation = Command data set 0: In this case the command code of the terminal strip P0700 Index 0 = 2 and the frequency target value is the analog target value P1000 Index 0 = 2.

Remote operation = Command data set 1: In this case the command code corresponds with the control word (word 0) received from the PROFIBUS P0700 Index 1 = 6 and the frequency target value corresponds with the control word 1 received from the PROFIBUS P1000 Index 1 = 6.

Default assignment control word 2 (STW2)

The control word 2 is assigned as a default as follows. This can be changed by using BICO.

Table 6- 18 Assignment control word 2 (for VIK/NAMUR not defined)

Bit	Value	Meaning	P0922 = 1	P0922 = 350	P0922 = 352
0	1	Fixed frequency selection Bit 0	P1020 depends on P070x	= P1020	P1020 depends on P070x
1	1	Fixed frequency selection Bit 1	P1021 depends on P070x	= P1021	P1021 depends on P070x
2	1	Fixed frequency selection Bit 2	P1022 depends on P070x	= P1022	P1022 depends on P070x
3	1	Fixed frequency selection Bit 3	P1023 depends on P070x	= P1023	P1023 depends on P070x
4	–	Not used	--	--	--
5	–	Not used	--	--	--
6	–	Not used	--	--	--
7	–	Not used	--	--	--
8	1	Enable Technology Controller	0.0	= P2200	0.0
9	1	Enable DC Brake	0.0	= P1230	0.0
10	–	Not used	--	--	--
11	1	Enable Droop Speed Controller	Enable Droop	Enable Droop	Enable Droop
12	1	Torque Control	0.0	= P1501	0.0
	0	Speed Control			
13	0	External Fault 1	1.0	= P2106	1.0
14	–	Not used	--	--	--
15	–	Not used	--	--	--

Status word 1 (ZSW1)

Status word 1 (bits 0 to 10 as per PROFIdrive Profile and VIK/NAMUR, bits 11 to 15 specific to SINAMICS G120).

Table 6- 19 Bit assignments status word 1 (for all PROFIdrive and VIK/NAMUR telegrams)

Bit	Value	Meaning	Remarks
0	1	Ready to switch on	Power supply is switched on, electronics initialized, pulses disabled.
	0	Not ready to switch on	--
1	1	Ready to operate	Inverter is switched on (ON command is applied), no fault is active, inverter can start when "Enable operation" command is issued. See control word 1, bit 0.
	0	Not ready to operate	--
2	1	Operation enabled	Drive follows setpoint. See control word 1, bit 3.
	0	Operation disabled	--
3	1	Fault present	Drive has faulted. Drive is faulty and thus inoperative, switches to starting lockout state after successful correction and acknowledgement of fault.
	0	No fault	--
4	1	Coast Stop not activated	--
	0	Coast Stop activated	Coast Stop (OFF 2) command is present.
5	1	Quick Stop not activated	--
	0	Quick Stop activated	Quick Stop (OFF 3) command is present.
6	1	Switching on inhibited	The drive goes only again in the "Switched On" condition with "No Coast Stop AND No Quick Stop" followed by "ON".
	0	Switching on not inhibit	--
7	1	Warning present	Drive still works; warning in the service/maintenance parameter; no acknowledgement, see alarm parameter r2110.
	0	No warning	There is no warning or the warning has disappeared again.
8	1	Speed error within tolerance range	Setpoint/actual value deviation within tolerance range.
	0	Speed error out of tolerance range	--
9	1	Master control requested	The automation system is requested to assume control.
	0	No control requested	The master is not currently the master control.
10	1	Maximum frequency reached or exceeded	Inverter output frequency is higher or equal to the maximum frequency.
	0	Maximum frequency not reached	--
11	1	--	--
	0	Warning: Motor at current/torque limit	--
12	1	Motor holding brake active	Signal can be used to control a holding brake.
	0	--	--
13	1	--	Motor data indicate overload condition.
	0	Motor overload	--
14	1	CW rotation	--
	0	CCW rotation	--
15	1	--	--
	0	Inverter overload	e.g. current or temperature.

Status word 2 (ZSW2)

Status word 2 has the following default assignment: This can be modified using BICO.

Table 6- 20 Assignment status word 2 (for VIK/NAMUR not defined)

Bit	Value	Meaning	Description
0	1	DC Braking Active	DC current brake active
1	1	n_act < P2167	Drive inverter frequency < Shutdown limit
2	1	n_act ≧ P1080	Actual frequency > min. frequency
3	1	i_act ≧ P2170	Current ≥ Limit
4	1	n_act > P2155	Actual frequency > Reference frequency
5	1	n_act ≦ P2155	Actual frequency < Reference frequency
6	1	Speed Setpoint Reached	Actual frequency ≥ Setpoint
7	1	DC Link Voltage < P2172	Voltage < Threshold value
8	1	DC Link Voltage ≧ P2172	Voltage > Threshold value
9	1	Speed Ramp Finished	--
10	1	Techn. Controller Output ≦ P2292	PI frequency < Threshold value
11	1	Techn. Controller Output > P2291	PI saturation
12	1	Vdc_max Controller	--
13	1	Kinetic Buffering and Flexible Response	--
14	1	Not used	--
15	1	Not used	--

6.3 Acyclic Communication

Overview of Acyclic communication

The content of the transferred data block corresponds to the structure of the acyclic parameter channel according to PROFIdrive Profile, version 4.1 (http://www.profibus.com/organization.htm (Page 126))

Acyclic data transfer mode allows in general:

- Large quantities of use data (up to 240 bytes) to be exchanged. A parameter request/response must fit in a data block (max. 240 byte). The requests/responses are not split-up over several data blocks.
- Transmission of complete arrays or parts of them, or the entire parameter description.
- Transmission of different parameters in one access (multi-parameter requests).
- To read out the profile-specific parameters by an acyclic channel
- Acyclic data transmission in parallel to cyclic data transmission.

Always just one request is being processed at a time (no pipelining). No spontaneous messages will be transmitted.

Acyclic communication via PROFIBUS DP (DPV1)

The PROFIBUS DP extensions DPV1 include the definition of an acyclic data exchange.

It allows simultaneous accessing by other PROFIBUS masters (class 2 master, e.g. start-up tool).

Conversion of extended PROFIBUS DP functionality

The different masters, or different modes of data exchange, are represented by appropriate channels in the SINAMICS G120 range of inverters:

- Acyclic data exchange with the class 1 master uses the DPV1 functions READ and WRITE (with data block 47 (DS47)).
- Acyclic data exchange using a SIEMENS start-up tool (class 2 master) (e.g. STARTER). The start-up tool can acyclically access parameter and process data in the inverter.
- Acyclic data exchange with a SIMATIC HMI (second class 2 master). The SIMATIC HMI can acyclically access parameters in the inverter.
- Instead of a SIEMENS start-up tool or SIMATIC HMI, an external master (class 2 master) as defined in the acyclic parameter channel according to PROFIdrive Profile version 4.1 (with DS47) can access the inverter.

Acyclic communication via PROFInet (Base mode parameter access)

In the base mode parameter access, the requests and the replies are transmitted acyclically by use of the "Acyclic Data Exchange" mechanism of the Communication System.

It allows simultaneous accessing by other PROFInet IO Supervisors (e.g. start-up tool).

Acyclic PROFInet functions

The different communication devices, or different modes of data exchange, are represented by appropriate channels in the SINAMICS G120 range of inverters:

- Acyclic data exchange with the IO controller uses the functions READ and WRITE (with 0xB02E)).
- Acyclic data exchange using a SIEMENS start-up tool (IO supervisor, e.g. STARTER). The start-up tool can acyclically access parameter and process data in the inverter.
- Acyclic data exchange with a SIMATIC HMI (second IO supervisor). The SIMATIC HMI can acyclically access parameters in the inverter.
- Instead of a SIEMENS start-up tool or SIMATIC HMI, an external IO supervisor as defined in the acyclic parameter channel according to PROFIdrive Profile version 4.1 (with 0xB02E) can access the inverter.

See also

http://www.profibus.com/organization.html (http://www.profibus.com/organization.html)

Cyclic Communication (Page 126)

6.3.1 Parameter Channel

Properties of the parameter channel

- One 16-bit address each for parameter number and subindex.
- Concurrent access by several masters (e.g. commissioning tool).
- Transfer of different parameters in one access (multiple parameter request).
- Transfer of complete arrays or part of an array possible.
- Only one parameter request is processed at a time (no pipelining).
- A parameter request/response must fit into a data set (max. 240 bytes at DPV1).
- The task or response header are use data.

Structure of parameter request and parameter response

A parameter request consists of three segments:

- **Request header**

  ID for the request and number of parameters which are accessed.

- **Parameter address**

  Addressing of a parameter. If several parameters are accessed, there are correspondingly many parameter addresses. The parameter address appears only in the request, not in the response.

- **Parameter value**

  Per addressed parameter, there is a segment for the parameter values. Depending on the request ID, parameter values appear only either in the request or in the reply.

Table 6- 21 Parameter request

	Word	
	Byte	Byte
Request header	Request Reference	Request ID
	Drive object ID	No. of Parameters
1st Parameter Address	Attribute	No. of elements
	Parameter Number (PNU)	
	Subindex	
…		
nth Parameter Address	Attribute	No. of elements
	Parameter Number (PNU)	
	Subindex	
1st Parameter Value(s) (only for request "Change parameter")	Format	No. of Values
	Values	
	…	
…		
nth Parameter Value(s)	Format	No. of Values
	Values	
	…	

Table 6- 22 Parameter response

	Word	
	Byte	Byte
Response header	Request Reference mirrored	Response ID
	Drive object ID mirrored	No. of Parameters
1st Parameter Value(s) (only after request "Request")	Format	No. of Values
	Values or Error Values	
	…	
…		
nth Parameter Value(s)	Format	No. of Values
	Values or Error Values	
	…	

Description of fields in parameter request and response

Table 6- 23 Description of fields in parameter request

Field	Data type	Values	Note
Request reference	Unsigned8	0x01 … 0xFF	
	Unique identification of the request/response pair for the master. The master changes the request reference with each new request. The slave mirrors the request reference in its response.		
Request ID	Unsigned8	0x01 0x02	Read request Write request
	Specifies the type of request. In the case of a write request, the changes are made in a volatile memory (RAM). A save operation is needed in order to transfer the data to the non-volatile memory (P0971).		
Drive object ID	Unsigned8	0x00 … 0xFF	Number
	Setting up of the drive object number with a drive unit with more than one drive object. Different drive objects with separate parameter number ranges can be accessed via the same connection.		
No. of Parameters	Unsigned8	0x01 … 0x27	No. 1 … 39 Limited by telegram length
	Defines the number of adjoining areas for the parameter address and/or parameter value for multi-parameter requests. The number of parameters = 1 for single requests.		
Attribute	Unsigned8	0x10 0x20 0x30	Value Description Text (not implemented)
	Type of parameter element accessed.		
No. of Elements	Unsigned8	0x00 0x01 … 0x75	Special function No. 1 … 117 Limited by telegram length
	Number of array elements accessed.		
Parameter number	Unsigned16	0x0001 … 0xF FFF	No. 1 … 65535
	Addresses the parameter to be accessed.		
Subindex	Unsigned16	0x0000 … 0xF FFF	No. 0 … 65535
	Addresses the first array element of the parameter to be accessed.		

Field	Data type	Values	Note
Format	Unsigned8	0x02 0x03 0x04 0x05 0x06 0x07 0x08 Other values 0x40 0x41 0x42 0x43 0x44	Data type Integer 8 Data type Integer 16 Data type Integer 32 Data type Unsigned 8 Data type Unsigned 16 Data type Unsigned 32 Data type Floating Point See PROFIdrive Profile Zero (without values as a positive subresponse to a write request) Byte Word Double word Error
	The format and number specify the adjoining space containing values in the telegram. Data types in conformity with PROFIdrive Profile shall be preferred for write access. Bytes, words and double words are also possible as a substitute.		
No. of Values	Unsigned8	0x00 … 0xEA	No. 0 … 234 Limited by telegram length
	Specifies the number of subsequent values.		
Values	Unsigned16	0x0000 … 0x0 0FF	
	The values of the parameter for read or write access. If the values make up an odd number of bytes, a zero byte is appended. This ensures the integrity of the word structure of the telegram.		

Table 6- 24 Description of fields in parameter response

Field	Data type	Values	Note	
Request reference	See Table above			
Response ID	Unsigned8	0x01 0x02 0x81 0x82	Read request (+) Write request (+) Read request (–) Write request (–)	Request positive, status ok Request negative, fault status
	Mirrors the request identifier and specifies whether request execution was positive or negative. Negative means: Cannot execute part or all of request. The error values are transferred instead of the values for each subresponse.			
Drive object ID	See Table above			
No. of Parameters	See Table above			
Format	See Table above			
No. of Values	See Table above			
Values	See Table above			
Error Values	Unsigned16	0x0000 … 0x0 0FF	Meaning of the error values see next Table	
	The error values in the event of a negative response. If the values make up an odd number of bytes, a zero byte is appended. This ensures the integrity of the word structure of the telegram.			

Note

Drive ES SIMATIC provides function blocks for parameter write/read tasks within standard block libraries and some examples.

Error values in DPV1 parameter responses

Table 6- 25 Explanation of error values in parameter responses

Error value	Description	Remarks	Extra info
0x00	Illegal parameter number	Access to a parameter which does not exist.	–
0x01	Parameter value cannot be changed	Modification access to a parameter value which cannot be changed.	Subindex
0x02	Lower or upper value limit exceeded	Modification access with value outside value limits.	Subindex
0x03	Invalid subindex	Access to a subindex which does not exist.	Subindex
0x04	No array	Access with subindex to an unindexed parameter.	–
0x05	Wrong data type	Modification access with a value which does not match the data type of the parameter.	–
0x06	Illegal set operation (only reset allowed)	Modification access with a value not equal to 0 in a case where this is not allowed.	Subindex
0x07	Description element cannot be changed	Modification access to a description element which cannot be changed.	Subindex
0x09	No description data	Access to a description which does not exist (the parameter value exists).	–
0x0B	No operating priority	Modification access with no operating priority.	–
0x0F	No text array exists	Access to a text array which does not exist (the parameter value exists).	–
0x11	Request cannot be executed due to operating status	Access is not possible temporarily for unspecified reasons.	–
0x14	Illegal value	Modification access with a value which is within the limits but which is illegal for other permanent reasons (parameter with defined individual values).	Subindex
0x15	Response too long	The length of the present response exceeds the maximum transfer length.	–
0x16	Illegal parameter address	Illegal or unsupported value for attribute, number of elements, parameter number, subindex or a combination of these.	–
0x17	Illegal format	Write request: illegal or unsupported parameter data format.	–
0x18	No. of values inconsistent	Write request: a mismatch exists between the number of values in the parameter data and the number of elements in the parameter address.	–
0x19	Drive object does not exist	Access to a drive object which does not exist.	–
0x20	Parameter text element cannot be changed	Change access to a parameter text element that cannot be changed.	Subindex
0x21	invalid request	–	–

6.4 Communication via PROFIBUS

6.4.1 General Information About PROFIBUS for SINAMICS

General information

PROFIBUS is an open international field bus standard for a wide range of production and process automation applications.

The following standards ensure open, multi-vendor systems:

- International standard EN 50170
- International standard IEC 61158

PROFIBUS is optimized for high-speed, time-critical data communication at field level.

Note

PROFIBUS for drive technology is standardized and described in the following document:

Reference: /P5/ PROFIdrive Profile Drive Technology

CAUTION
Before synchronizing to the isochronous PROFIBUS, all of the pulses of the drive objects must be inhibited - also for those drives that are not controlled via PROFIBUS.

Technical data

To display information about the current operating state of the inverter and the communication link, the PROFIBUS DP has three LEDs on the Standard Control Unit and seven on the Control Unit with fail-safe functions.

Its voltage is supplied through the inverter system connector.

The PROFIBUS DP is connected to the PROFIBUS system using a 9-pin sub-D type socket according to the PROFIBUS standard. All connections to this interface are short-circuit-proof and isolated.

The PROFIBUS DP supports baud rates of 9.6 kbaud to 12 Mbaud.

6.4.2 Communication Settings PROFBUS DP

Setting the PROFIBUS DP address

Prior to using the PROFIBUS DP interface, the address of the node (inverter) must be set.

There are two methods for setting the PROFIBUS DP address:

- Using the seven DIP-switches on the Control Unit
- Using parameter "P0918"

CAUTION
If changing the PROFIBUS DP address, a power cycle is necessary for the Control Unit CU240S to make the new PROFIBUS DP address setting effective. The restart must be initiated by switching the power off and then on again, irrespective of whether the interface is supplied from the inverter mains supply or its own, separate 24 V power supply connection.

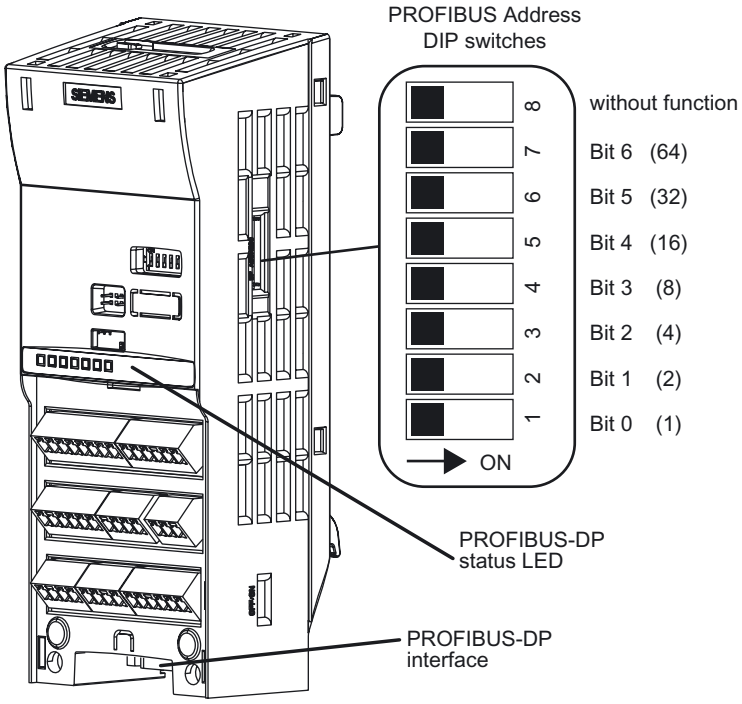

Figure 6-7 PROFIBUS DP address DIP-switches

The PROFIBUS DP address can be set between 1 and 126, as shown in the table below.

Table 6- 26 Example address for the PROFIBUS DP interface

DIP switch	1	2	3	4	5	6	7
Add to address	1	2	4	8	16	32	64
Example 1: Address = 3 = 1 + 2	■	■	□	□	□	□	□
Example 2: Address = 88 = 8 + 16 + 64	□	□	□	■	■	□	■

The valid address range is shown in the table below:

Table 6- 27 PROFIBUS DP address

DIP switch settings	Meaning
0	PROFIBUS DP address is determined by P0918
1 … 126	PROFIBUS DP address range

Note

Address 126 cannot be used with a SIMATIC plc.

PROFIBUS DP parameters

The following parameters must be set to start-up the PROFIBUS DP interface:

Table 6- 28 PROFIBUS DP parameters

Parameter	Content
P0918	PROFIBUS address
P0700	Selection of command source
P0922	Selection of PROFIBUS standard telegram
P1000	Selection of frequency setpoint
P2038	Selection of communication profile
P2042	Selection of the ident number (native or NAMUR) send to PLC
r2050	Process data setpoint source (BICO)
P2051	Process data actual values (BICO)
P2041	Communication board functions
P2040	Process data telegram failure time
P0927	Modification source for parameters
r2054	Communication board diagnostics

P0918 PROFIBUS Address

- If address 0 is set on the DIP-switches of the Control Unit (default setting), then the PROFIBUS DP address can be changed in parameter P0918. Valid settings are 1 to 125 (default = 3).
- DIP-switch address settings have priority to P0918 settings. That means if a valid PROFIBUS DP address is set via DIP-switches, the settings of P0918 will be ignored. In this case, the parameter displays the PROFIBUS DP address as set on the DIP-switches.

P0700 and P1000 selection of command and setpoint source

- Command and setpoint source can be quickly selected via P0700 and P1000.

P0922 Selection of PROFIBUS standard telegram

- For failure-free operation, you must select the correct type of telegram. For details, refer to section "Cyclic Communication" of this manual or the Parameter Manual.

r2050 and P2051 BICO

- Much greater flexibility is afforded by the interconnection of process data using binectors/connectors.
- Detailed connection of setpoints and actual values to and from the PROFIBUS DP interface is parameterized in r2050 and P2051.
- The following table shows the parameters specific to the PROFIBUS DP interface relating to the connection of process data:

Table 6- 29 Parameters for flexible interconnection of process data

Telegram	PZD1 STW/ZSW	PZD2 HSW/HIW	PZD3	PZD4	PZD5	PZD6
Link values for setpoints master to inverter	r2050.00	r2050.01	r2050.02	r2050.03	r2050.04	r2050.05
Link parameters for actual values inverter to master	P2051.00	P2051.01	P2051.02	P2051.03	P2051.04	P2051.05

Note

r2050 also acts as a display parameter through which the setpoints received by the PROFIBUS DP interface can be checked.

P2041 PROFIBUS DP functions

A number of advanced property settings for the PROFIBUS DP interface can be accomplished using the indexed parameter P2041.

For most applications, however, the defaults values are adequate (value = 0). The following table shows the property setting options.

Table 6- 30 PROFIBUS DP functions

Parameter	Meaning	Value range
P2041.01	OP parameter in EEPROM: Modifications to parameter settings via SIMATIC HMI are stored permanently in the EEPROM or as volatile data in the RAM.	0: Permanent (EEPROM) 1: Volatile (RAM)
P2041.03	Select displayed diagnostics screen.	0: Standard diagnostics

Process data monitoring

Two parameters determine how process data are monitored:

- Process data monitoring function on the PROFIBUS DP interface (standard slave function according to PROFIBUS)
  The process data monitoring function on the PROFIBUS DP interface is normally activated. It can be deactivated by means of the PROFIBUS master configuring tool.
- Monitoring of the telegram failure time in the converter with parameter P2040
  Parameter P2040 defines the time after which a fault will be generated (F0070) if no telegram is received through the PROFIBUS DP interface.
  - P2040 = 0 means: No monitoring
  - P2040 > 0 means: The time in milliseconds after which a fault condition will be generated if a setpoint telegram has not been received.

> ⚠ CAUTION
>
> The process data monitoring function should not be deactivated! If the monitoring function is deactivated, the inverter will not recognize a PROFIBUS DP communication failure and continue to operate with possibly wrong commands and setpoints.

F0070 is activated if no new setpoints are received by the PROFIBUS DP interface within the telegram failure period.

> CAUTION
>
> Shutdown on faults can only take place if both monitoring functions are activated!

When the PROFIBUS DP interface is in operation, parameter P2040 should also be set to a value of > 0. The process data monitoring function is thus activated/deactivated solely using the PROFIBUS process data monitoring function. The monitoring time then corresponds to the process data monitoring time setting plus the time set in P2040.

Note

Process data whose complete control word (PZD1) is set to zero are not transferred from the PROFIBUS DP interface to the inverter.

Result: Alarm A0703 and possibly fault F0070.

P0927 Modification source for parameters

This parameter defines the interface through which parameters can be modified.

Bit	Description	Index	
0	Fieldbus (PROFIBUS DP/PROFINET IO)	0: No	1: Yes
1	BOP	0: No	1: Yes
2	PC Connection Kit (STARTER)	0: No	1: Yes
3	RS485 (only CU240S)	0: No	1: Yes

The default setting for all bits is 1, i.e. parameters can be modified from all sources.

6.4.3 PROFIBUS Configuration Example with SIMATIC S7

Installing a G120 GSD file

The inverter can be integrated into a higher level control device, e.g. SIMATIC S7 via the GSD file. It can be downloaded from the internet via:
http://support.automation.siemens.com/WW/view/de/23450835

The GSD file must be installed in HW Config of SIMATIC S7 as shown in the example below.

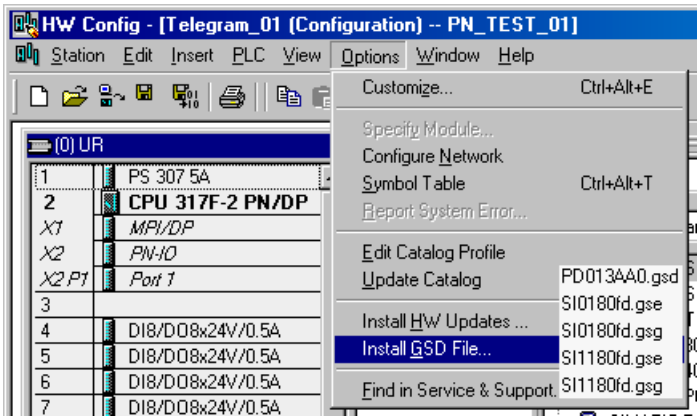

Figure 6-8 Installing the G120 GSD in HW config SIMATIC S7

Install the *.GS* file in the desired language (**e**nglish, **f**rench, **g**erman, **i**talian or **s**panish) from the folder where you have stored the data.

Adding a SINAMICS G120 inverter to HW Config

To add the SINAMICS G120 inverter as a PROFIBUS slave, perform the following steps:

1. Select the PROFIBUS in HW config.
2. Open " PROFIBUS DP > Additional Field Devices > Drives > SINAMICS" in the hardware catalog.

3. Double click onto e.g. "SINAMICS G120 CU240S DP F v3.00". This inserts a fail-safe G120 inverter as PROFIBUS slave and opens the properties dialog. Assign a PROFIBUS address and a unique device name or accept the ones, the system offers. Confirm your settings with OK.

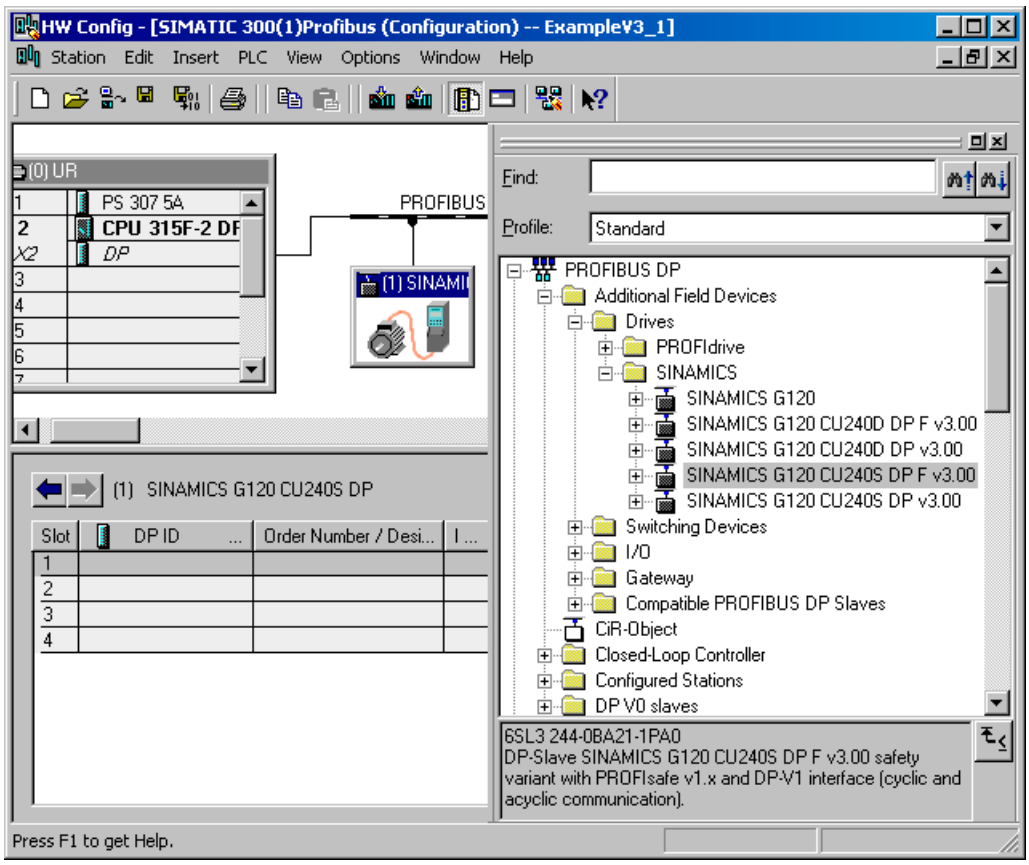

Setting the telegram addresses

Note

The inverters are able to operate with different telegram types. The telegram, selected in the inverter via P0922, must be identical to the type selected in HW Config.

The addresses can be changed by opening the properties dialog via double click. Set the addresses to the appropriated values or accept the ones, the system offers and confirm your settings with OK. The addresses set here must be used in the S7- program for the cyclic data transfer.

Failsafe inverters

Note

In case of installing a fail-safe inverter, ensure that the PROFIsafe Module is installed in slot 1 (as shown in the figure below). In the following slot a SIEMENS telegram or a standard telegram can be installed.

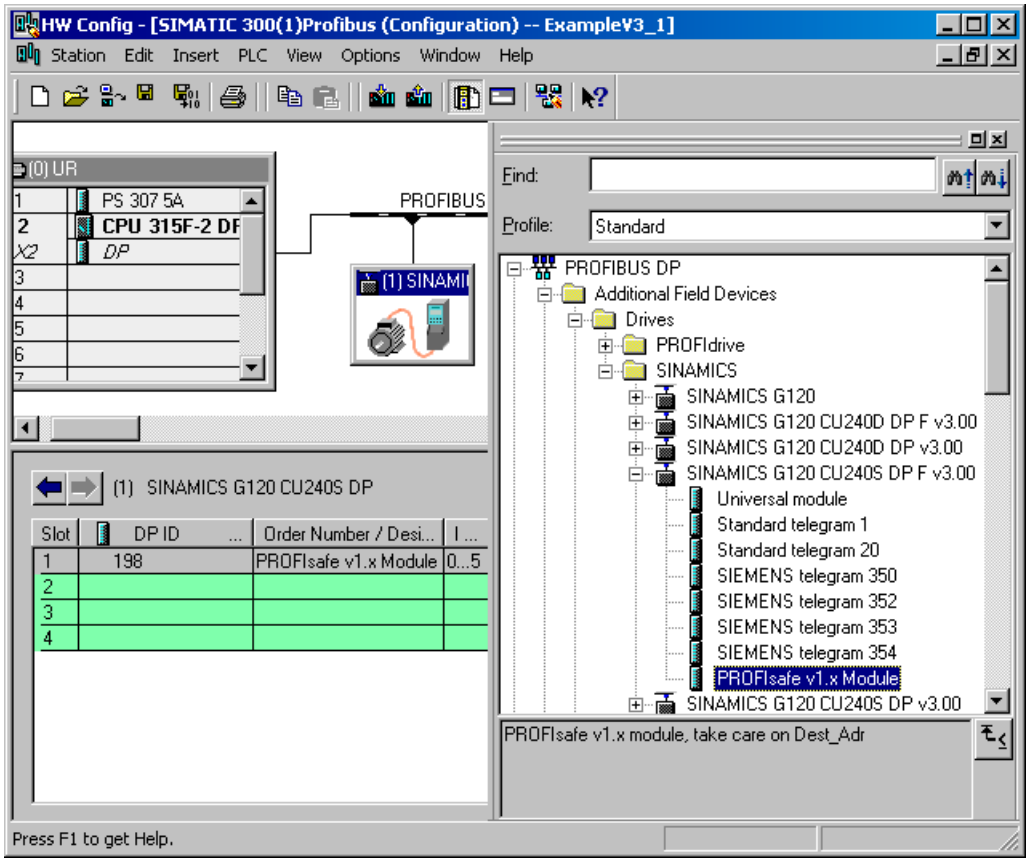

PROFIsafe Parameters

The PROFIsafe parameters are shown in the following dialog box (to be opened eg. via left mouse double click on PROFIsafe module).

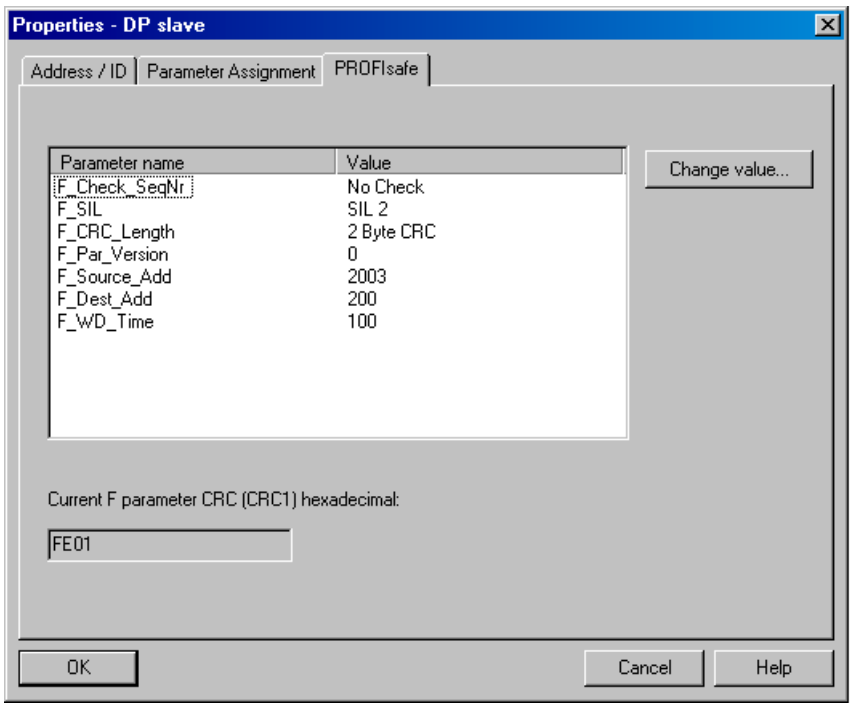

Only the following parameters can be changed

- F_Dest_Add: PROFIsafe address
- F_WD_Time: control time for the fail-safe functions

CAUTION
F_WD_Time In conjunction with the sync/freeze function, the watchdog-time should be increased.

A more detailed description can be downloaded from
http://support.automation.siemens.com/WW/view/en/23646766.

Once all inverters with their telegrams are added, save the project and compile.

6.4.3.1 Read Parameters

Requirements

- The PROFIBUS master has been commissioned and is fully operational.
- PROFIBUS communication between master and slave is operational.
- The master can read and write data sets in conformance with PROFIBUS DPV1.

Task description

Following the occurrence of at least one fault (ZSW1.3 = 1) the first 8 active fault codes must be read from the fault buffer r0947[0] … r0947[7]. The accompanied faults values of the fault code are important for the user. These must be read from parameter r0949 [0] ...r0949[7].

The request is to be handled using a request and response data block.

Procedure

Create a request data block e.g. DB1 to read the parameters

Address	Name	Type	Initial valu	Comment
0.0		STRUCT		
+0.0	Request_reference	BYTE	B#16#1	request number
+1.0	Request_ID	BYTE	B#16#1	request parameter = 1; change parameter = 2
+2.0	DO_ID	BYTE	B#16#0	DO_ID
+3.0	No_of_parameter	BYTE	B#16#2	read out two parameters (r0947[64] and r0949[64]
+4.0	Attribute_parameter_01	BYTE	B#16#10	value
+5.0	No_of_elements_01	BYTE	B#16#8	number of indices 8
+6.0	Paramete_number_01	WORD	W#16#3B3	parameter r0947[64] only 8 from 64 error codes
+8.0	Subindex_01	WORD	W#16#0	subindex
+10.0	Attribute_parameter_02	BYTE	B#16#0	value
+11.0	No_of_elements_02	BYTE	B#16#8	number of indices 8
+12.0	Paramete_number_02	WORD	W#16#3B5	parameter r0949[64] only 8 from 64 error values
+14.0	Subindex_02	WORD	W#16#0	subindex
=16.0		END_STR		

Figure 6-9 Request data block e.g. DB1 to read the parameters

Table 6- 31 Parameter request

Request header	Request_reference = 0x01	Request_ID = 0x01
	Drive_object_ID = 0x00	No_of_parameters = 0x02
Parameter Address_01	Attribute_parameter_01 = 0x10	No_of_elements_01 = 0x08
	parameter_number_01 (PNU) = 03B3 (= 947 dec, P0947)	
	Subindex_01 = 0x00	
Parameter Address_02	Attribute_parameter_02 = 0x10	No_of_elements_02 = 0x08
	parameter_number_02 (PNU) = 03B5 (= 949 dec, P0949)	
	Subindex_02 = 0x00	

Information about the parameter request:

- Request_reference:

  The value is selected at random from the valid value range. The request reference establishes the relationship between request and response.
- Request_ID:

  0x01 --> This identifier is required for a read request.
- Drive_object_ID:

  0x00 -> Device-Representative.
- No_of_parameters:

  0x02 --> Two parameters are read.
- Attribute_parameter_01:

  0x10 --> The parameter values are read.
- No_of_elements_01:

  0x08 --> The current fault incident with 8 faults is to be read.
- Parameter_number_01:

  03B3 --> P0947 (last fault code) is read.
- Subindex_01:

  0x00 --> Read access starts at index 0
- Attribute_parameter_02:

  0x10 --> The parameter values are read.
- No_of_elements_02:

  0x08 --> The current fault incident with 8 faults is to be read.
- Parameter_number_02:

  03B5 --> P0949 (last fault code) is read.
- Subindex_02:

  0x00 --> Read access starts at index 0.

Create a response data block e.g. DB2 for the response

Address	Name	Type	Initial valu	Comment
0.0		STRUCT		
+0.0	Request_referenc_mirror	BYTE	B#16#0	request number mirrored
+1.0	Response_ID	BYTE	B#16#0	request parameter
+2.0	DO_ID_mirrored	BYTE	B#16#0	DO-ID mirrored
+3.0	No_of_parameters	BYTE	B#16#0	response about number of parameters
+4.0	Format_parameter_1	BYTE	B#16#0	response about parameter 1 format
+5.0	No_of_values_parameter_1	BYTE	B#16#0	response about number of value of parameter 1
+6.0	error_code_01	WORD	W#16#0	error code from index 0
+8.0	error_code_02	WORD	W#16#0	error code from index 1
+10.0	error_code_03	WORD	W#16#0	error code from index 2
+12.0	error_code_04	WORD	W#16#0	error code from index 3
+14.0	error_code_05	WORD	W#16#0	error code from index 4
+16.0	error_code_06	WORD	W#16#0	error code from index 5
+18.0	error_code_07	WORD	W#16#0	error code from index 6
+20.0	error_code_08	WORD	W#16#0	error code from index 7
+22.0	Format_parameter_2	BYTE	B#16#0	response about parameter 1 format
+23.0	No_of_values_parameter_2	BYTE	B#16#0	response about number of value of parameter 1
+24.0	error_value_01	DWORD	DW#16#0	error value from index 0
+28.0	error_value_02	DWORD	DW#16#0	error value from index 1
+32.0	error_value_03	DWORD	DW#16#0	error value from index 2
+36.0	error_value_04	DWORD	DW#16#0	error value from index 3
+40.0	error_value_05	DWORD	DW#16#0	error value from index 4
+44.0	error_value_06	DWORD	DW#16#0	error value from index 5
+48.0	error_value_07	DWORD	DW#16#0	error value from index 6
+52.0	error_value_08	DWORD	DW#16#0	error value from index 7
=56.0		END_STR		

Figure 6-10 Response data block e.g. DB2 for the response

Table 6- 32 Parameter response

Response header	Request_reference mirror = 0x01	Response_ID = 0x01
	Drive_object_ID_mirrored = 0x00	No_of_parameters = 0x02
Parameter Value(s)	Format_parameter_1 = 0x06	No_of_values_parameter_1 = 0x08
	error_code_01 = 0x054B (= 1355 dec, F1355)	
	error_code_02 = 0x0000	
	…	
	error_code_08 = 0x0000	
Parameter Value(s)	Format_parameter_2 = 0x06	No_of_values_parameter_2 = 0x08
	error_value_01 = 0x054B (= 1355 dec, F1355)	
	error_value_02 = 0x00	
	…	
	error_value_08 = 0x00	

Information about the parameter response:

- Request_reference_mirror:

  This response belongs to the request with request reference 0x01.
- Response_ID:

  0x01 --> Read request positive, values stored as 1st value.
- Drive_object_ID_mirrored:

  The values correspond to the values from the request.
- No_of_parameters:

  The values correspond to the values from the request.
- Format_parameter_1:

  0x06 --> Parameter values are in Unsigned16 format.
- No_of_values_parameter_1:

  0x08 --> 8 parameter values are available.
  - 1. value … 8. value:

    error_codes_01

    …

    error_codes_08
- Format_Parameter_2:

  0x06 --> Parameter values are in Unsigned16 format.
- No. of values_Parameter_2:

  0x08 --> 8 parameter values are available.
  - 1. value … 8. value:

    error_values_01

    …

    error_values_08.

For the acyclic communication in OB1 a read/write request must be send to the drive with RD_REC (SFC 59) and WR_REC (SFC 58)

```
Network 1: Title:
With SFC58 "WR_REC" (write record), you transfer the data record contained in
the RECORD (DB1) to the addressed module.

          CALL  "WR_REC"
           REQ    :=M8.0                    //write request
           IOID   :=B#16#54                 //ID of the address area peripherical input (PI)
           LADDR  :=W#16#100                //logical address of the module from the HW Config address 256 (dec)
           RECNUM :=B#16#2F                 //Data record number
           RECORD :=P#DB1.DBX0.0 BYTE 16    //Data record
           RET_VAL:=MW10                    //If an error occurs while the function is active, the return value contains an error c
           BUSY   :=M8.1                    //BUSY = 1; Writing is not yet completed


          U     M      8.1                  //if writing is active
          R     M      8.0                  //no new request available

Network 2 : Title:
With SFC59 "RD_REC" (read record), you read the data record with the number
RECNUM from the addressed module. The data record read is entered in the
destination area (DB2), wich is indicated by the RECORD parameter.
the RECORD (DB1) to the addressed module.

          CALL  "RD_REC"
           REQ    :=M8.2                    //read request
           IOID   :=B#16#54                 //ID of the address area peripherical input (PI)
           LADDR  :=W#16#100                //logical address of the module from the HW Config address 256 (dec)
           RECNUM :=B#16#2F                 //Data record number
           RET_VAL:=MW12                    //If an error occurs while the function is active, the return value contains an error c
           BUSY   :=M8.3                    //BUSY = 1; Reading is not yet completed
           RECORD :=P#DB2.DBX0.0 BYTE 56    //Destination area for the data record read

          U     M      8.3                  //if reading is active
          R     M      8.2                  //no new request available
```

Figure 6-11 Acyclic communication for request and response data block in OB1

6.4.3.2 Write Parameters

Requirements

- The PROFIBUS master has been commissioned and is fully operational.
- PROFIBUS communication between master and slave is operational.
- The master can read and write data sets in conformance with PROFIBUS DPV1.

Task description (multiple parameter request)

The maximum frequency (parameter P1082) shall change from 50 Hz (default value) to 100 Hz.

Procedure

Create a request data block e.g. DB1 to write the parameter

Address	Name	Type	Initial valu	Comment
0.0		STRUCT		
+0.0	Request_reference	BYTE	B#16#1	request number
+1.0	Reques_ID	BYTE	B#16#2	request parameter = 1; change parameter = 2
+2.0	Drive_object_ID	BYTE	B#16#0	
+3.0	No_of_parameters	BYTE	B#16#1	number of parameter wich should change
+4.0	Attribute	BYTE	B#16#10	value = 10; description = 20; text = 30
+5.0	No_of_elements	BYTE	B#16#1	number of indices
+6.0	Parameter_number	WORD	W#16#43A	parameter 1082; 1082 dec = 43A hex
+8.0	Subindex	WORD	W#16#0	index 0
+10.0	Format	BYTE	B#16#43	data type of parameter P1080 = float (see parameter list)
+11.0	No_of_values	BYTE	B#16#1	number of values = number of elements
+12.0	Value	REAL	1.000000e+0(	maximum frequency form 50 Hz (default) to 100 Hz
=16.0		END_STR		

Figure 6-12 Request data block e.g. DB1 to write the parameter

Information about the parameter request:

- Request_reference:

  The value is selected at random from the valid value range. The request reference establishes the relationship between request and response.
- Request_ID:

  0x02 --> This identifier is required for a write request.
- Drive_object_ID:

  0x00 -> Device-Representative (for G120 inverters = 0).
- No_of_parameters:

  0x01 --> One parameter request.
- Attribute:

  0x10 -> The parameter value are to be written.
- No_of_elements:

  0x01 -> 1 array element is written.
- Parameter_number:

  043A -> Parameter P1082 (max. frequency); 043A hex = 1082 dec.
- Subindex:

  0x00 -> ID for the first array element.
- Format:

  0x43 -> Floating Point data type (refer to the Parameter List).
- No_of_values:

  0x01 -> One value is written to the parameter in the specified format.
- Value:

  1.000000e+002 -> maximum frequency 100 Hz.

For the acyclic communication in OB1 a write request must be send to the drive with WR_REC (SFC 58)

```
Network 1: Title:
With SFC58 "WR_REC" (write record), you transfer the data record contained in
the RECORD (DB1) to the addressed module.

      CALL  "WR_REC"                    //write request
       REQ    :=M8.0                    //start signal with M8.0 in VAT_1
       IOID   :=B#16#54
       LADDR  :=W#16#100                //hardware address in Hex; 256 dec = 100 hex
       RECNUM :=B#16#2F                 //data set 47 (DS47); 47 dec = 2F hex
       RECORD :=P#DB1.DBX0.0 BYTE 16    //ANYPOINTER to the request data block DB1
       RET_VAL:=MW10                    //return value
       BUSY   :=M8.1                    //request active

      U     M      8.1
      R     M      8.0
```

Figure 6-13 Acyclic communication in OB1

6.5 Communication via PROFINET

General information

PROFINET IO is an open Industrial Ethernet standard for a wide range of production and process automation applications. PROFINET IO is based on Industrial Ethernet and observes TCP/IP and IT standards.

The following standards ensure open, multi-vendor systems:

- International standard IEC 61158

PROFINET IO is optimized for high-speed, time-critical data communication at field level.

PROFINET

Within the framework of Totally Integrated Automation (TIA), PROFINET represents a consequent enhancement of the following communication systems:

- PROFIBUS DP

  The established field bus

- Industrial Ethernet

  The communication bus for the cell level

Experience gained from both systems was and is being integrated into PROFINET. As an Ethernet-based automation standard defined by PROFIBUS International (PROFIBUS user organization), PROFINET is a manufacturer-independent communication and engineering model.

SINAMICS G120 with CU240S PN is an IO device in the sense of PROFINET. With CU240S PN, communications is established via PROFINET IO with RT.

Note

PROFINET for drive technology is standardized and described in the following document:

References:

/P5/ PROFIdrive Profile Drive Technology

PROFINET System Description,

Order no. 6ES7398-8FA10-8BA0, 6ES7151-1AA10-8AA0

Note

PROFIsafe via PROFInet

When using fail-safe functions with a CU240S PN-F or a CU240D PN-F see also:
http://support.automation.siemens.com/WW/view/de/25412441

6.5.1 Real-Time (RT) Communication

Real-time communication

If supervisors are involved in communication, this can result in excessively long runtimes for the production automation system. When communicating time-critical IO use data, PROFINET therefore uses its own real time channel, rather than TCP/IP.

Definition: Real Time (RT) and determinism

Real time means that a system processes external events over a defined period.

Determinism means that a system responds in a predictable manner (deterministically).

In industrial networks, both of these requirements are important. PROFINET meets these requirements. PROFINET is implemented as a deterministic real time network as follows:

- Transmission of time-critical data takes place at guaranteed time intervals. To achieve this, PROFINET provides an optimized communication channel for real time communication: Real Time (RT).
- An exact prediction of the time at which the data transfer takes place is possible.
- Problem-free communication using other standard protocols is guaranteed within the same network.

6.5.2 Addresses

MAC address

Each PROFINET device is assigned a worldwide unique device identifier in the factory. This 6-byte long device identifier is the MAC address. You can see the MAC address with support of commissioning tools as PST, STEP 7 or STARTER. The MAC address is divided up as follows:

- 3 bytes manufacturer's ID and
- 3 bytes device identifier (consecutive number).

The MAC address is indicated on the rating plate of the Control Unit. The MAC address is stored in the parameter r61002.

Example for a MAC address: 08-00-06-6B-80-C0

IP address

The IP address is unique within the network. A PROFINET device also requires an IP address to be addressed as a node on Industrial Ethernet. The IP address is made up of 4 decimal numbers with a range of values from 0 through 255. The digit blocks are separated by points, e g. 192.188.1.1. The IP address is made up of the following:

- The address of the (sub-) network
- The address of the node (generally called the host or network node)

IP address assignment

The TCP/IP protocol is a prerequisite for establishing a connection and parameterization. This is the reason that an IP address is required.

The IP addresses of IO devices can be assigned by the IO controller and have always the same sub-network mask as the IO controller. The IP addresses can be consecutively assigned from the IP address of the IO controller.

If the IP address is set by the IO controller, it is saved in a volatile fashion. Furthermore, you can change the IP address manually. In this case, the IP address is saved in non-volatile fashion.

If the IP address is to be stored in a non-volatile memory, the address must be assigned using the Primary Setup Tool (PST).

This can also be carried out in HW Config in STEP 7, where the function is called "Edit Ethernet node".

Note

If the network is part of an existing Ethernet company network, obtain the information from your network administrator (IP address, sub-network mask and a router that is possibly being used.)

Sub-network mask

The bits set in the sub-network define the part of the IP address that contains the address of the (sub-) network. The subnet mask provides a filter function for the Ethernet telegrams. The following generally applies:

- The network address is obtained by an AND operation on the IP address and sub-network mask
- The node address is obtained by an AND NOT operation on the IP address and sub-network mask.

Example of the sub-network mask

Sub-network mask: 255.255.0.0 (decimal) = 11111111.11111111.00000000.00000000 (binary) IP address: 140.80.0.2 significance: The first 2 bytes of the IP address decide the sub-network - in other words 140.80. The last two bytes address the node - in other words 0.2.

Default Gateway

The default gateway enables communication via an internal server.

Module ID

A drive unit can be represented by a slot model. The slot model of the CU240S PN provides modules and sub-modules. The module-ID is the ID of a slot module or slot sub-module in this model.

The module ID has four digits and is assigned by the system. The slot model of the CU240S PN provides two main module ID:

- Module ID of slot 0, device access point (DAP)

  This module ID is used as a representative of the device. This module ID does not provide access to the drive parameters.
- Module ID of slot 1, parameter access point (PAP)

  This module ID provides access to the following:
  - All drive parameters via the parameter access point
  - The cyclic data via defined telegrams

Device name

At delivery state, an IO device does not have a device name. You assign a device name with the IO supervisor. Then, the IO device can be addressed by an IO controller. The device name is used to transfer of project engineering data (including the IP address) during startup.

Note

The device name must be saved in a non-volatile fashion either using the Primary Setup Tool (PST) or using HW Config from STEP 7.

Device-ID

Each PROFINET device has a specific device ID that is issued by device manufacturer. The device ID provides replacing an IO device without configuring in STEP 7.

The device-ID for SINAMICS G120 indicates the following table:

Vendor ID	Device ID	
	Class of device	Device familiy
002A	**05**	**02**
(=Siemens AG)	(=Drives)	(=SINAMICS G120)

Replacing Control Unit CU240S PN (IO Device)

If the IP address and device name are stored in a non-volatile memory, this data are also forwarded by the Micro Memory Card (MMC) of the Control Unit.

If an IO device must be completely replaced due to a device or sub-module defect, the Control Unit automatically assigns parameters and configures the new device or sub-module. Following this, cyclic exchange of use data is restarted. The MMC allows module exchange without an IO supervisor when a fault occurs in a PROFINET device.

Default router

If data needs to be forwarded by means of TCP/IP to a partner located outside the sub-network, this is carried out via the default router. In the properties dialog in STEP 7 (Properties of Ethernet interface > Parameters > Network transfer), the default router is described as the router. STEP 7 assigns the local IP address to the default router.

6.5.3 PROFINET Communication Parameters

PROFINET parameters

The following parameters must be set to start-up the PROFINET interface:

Table 6- 33 PROFINET parameters

Parameter	Content
P0700	Selection of command source
P0922	Selection of PROFINET standard telegram
P0927	Modification source for parameters
P1000	Selection of frequency setpoint
P2038	Selection of communication profile
P2042	Selection of the ident number (native or NAMUR) send to PLC
r8850	Process data setpoint source (BICO)
P8851	Process data actual values (BICO)
P8841	Communication board functions
P8840	Process data telegram failure time
r61000	PROFINET name of station
r61001	PROFINET IP Of Station
r61002	PROFINET MAC Of Station
r61003	PROFINET Default Gateway Of Station
r61004	PROFINET Subnet Mask Of Station
r8858	Communication board diagnostics
r8859	Fieldbus identification data display

P0700 and P1000 selection of command and setpoint source

- Command and setpoint source can be quickly selected via P0700 and P1000.

r8850 and P8851 BICO

- Much greater flexibility is afforded by the interconnection of process data using binectors/connectors.
- Detailed connection of setpoints and actual values to and from the PROFINET interface is parameterized in r8850 and P8851.
- The following table shows the parameters specific to the PROFINET interface relating to the connection of process data:

Table 6- 34 Parameters for flexible interconnection of process data

Telegram	PZD1 STW/ZSW	PZD2 HSW/HIW	PZD3	PZD4	PZD5	PZD5
Link values for setpoints master to inverter	r8850.00	r8850.01	r8850.02	r8850.03	r8850.04	r8850.05
Link parameters for actual values inverter to master	P8851.00	P8851.01	P8851.02	P8851.03	P8851.04	P8851.05

Note

r8850 also acts as a display parameter through which the setpoints received by the PROFINET interface can be checked.

P8841 PROFINET functions

A number of advanced property settings for the PROFINET interface can be accomplished using the indexed parameter P8841.

For most applications, however, the defaults values are adequate (value = 0). The following table shows the property setting options.

Table 6- 35 PROFINET functions

Parameter	Meaning	Value range
P8841.01	BOP parameter in EEPROM: Modifications to parameter settings via SIMATIC HMI are stored permanently in the EEPROM or as volatile data in the RAM.	0: Permanent (EEPROM) 1: Volatile (RAM)
P8841.03	Select displayed diagnostics screen.	0: Standard diagnostics

Process data monitoring

The process data are monitored according to the following parameter:

- P8840 Fieldbus Off-time.

  If no telegram is received through the PROFINET interface, the fault F0070 will be generated. If no telegram is received , Parameter P8840 defines the period of time till the fault message is generated.

  – P8840 = 0 means: No monitoring

  – P8840 > 0 means: The period of time in milliseconds

⚠ CAUTION

Do not deactivate the process data monitoring function! If the monitoring function is deactivated, the inverter will not recognize a PROFINET communication failure and continue to operate with possibly wrong commands and setpoints.

F0070 is activated if no new setpoints are received by the PROFINET interface within the telegram failure period.

CAUTION
Shutdown on faults can only take place if both monitoring functions are activated!

When the PROFINET interface is in operation, parameter P8840 should also be set to a value of > 0. The process data monitoring function is thus activated/deactivated solely using the PROFIBUS process data monitoring function. The monitoring time then corresponds to the process data monitoring time setting plus the time set in P8840.

Note

Process data whose complete control word (PZD1) is set to zero are not transferred from the PROFINET interface to the inverter.

Result: Alarm A0703 and possibly fault F0070.

P0927 Modification source for parameters

This parameter defines the interface through which parameters can be modified.

Bit	Description	Index	
0	PROFINET	0: No	1: Yes
1	BOP	0: No	1: Yes
2	PC Connection Kit (STARTER)	0: No	1: Yes

The default setting for all bits is 1, i.e. parameters can be modified from all sources.

6.5.4 PROFInet Configuration Example with SIMATIC S7

Prerequisites

To integrate a SINAMICS G120 inverter in SIMATIC S7 control system, the following requirements should be fulfilled:

Prerequisites for standard inverters

- STEP 7 V5.4, SP1 is installed on the engineering station
- In HW Config, the following components are disposed:
  - One of the following CPUs

    CPU 315-2 PN/DP with firmware at least 2.5.1

    CPU 317-2 PN/DP with firmware at least 2.5.1

    CPU 319-3 PN/DP
  - A SIMATIC control system with a PROFINET sub-network, e.g. SIMATIC 300
  - SINAMICS G120 inverters are available as PROFINET I/O device in the hardware catalog.

Prerequisites for PROFIsafe via Profinet

- STEP 7 V5.4, SP2 is installed on the engineering station
- In HW Config, the following components are disposed:
  - One of the following CPUs

    CPU 315F-2 PN/DP with firmware at least 2.5.1

    CPU 317F-2 PN/DP with firmware at least 2.5.1

    CPU 319F-3 PN/DP
  - A SIMATIC control system with a PROFINET sub-network, e.g. SIMATIC 300
  - SINAMICS G120 inverters are available as PROFINET I/O device in the hardware catalog.

If the G120 is not available, the GSDML V2.0 has to be installed. It can be downloaded and installed from the internet under the following link:

http://support.automation.siemens.com/WW/view/de/22339653/133100

Installing the GSDML V2.0 file

1. Save the GSDML V2.0 file on your system and save the path.
2. Choose in the menu "Options > Install GSD File".

   A dialog box is displayed.
3. Add the relevant path to the GSDML V2.0 file and confirm with OK.

Adding a SINAMICS G120 inverter to HW Config

To add the SINAMICS G120 inverter as a PROFINET IO device, perform the following steps:

1. Select the PROFINET sub-network in HW config.
2. Open "PROFINET IO > Drives > SINAMICS > GSD" in the hardware catalog.

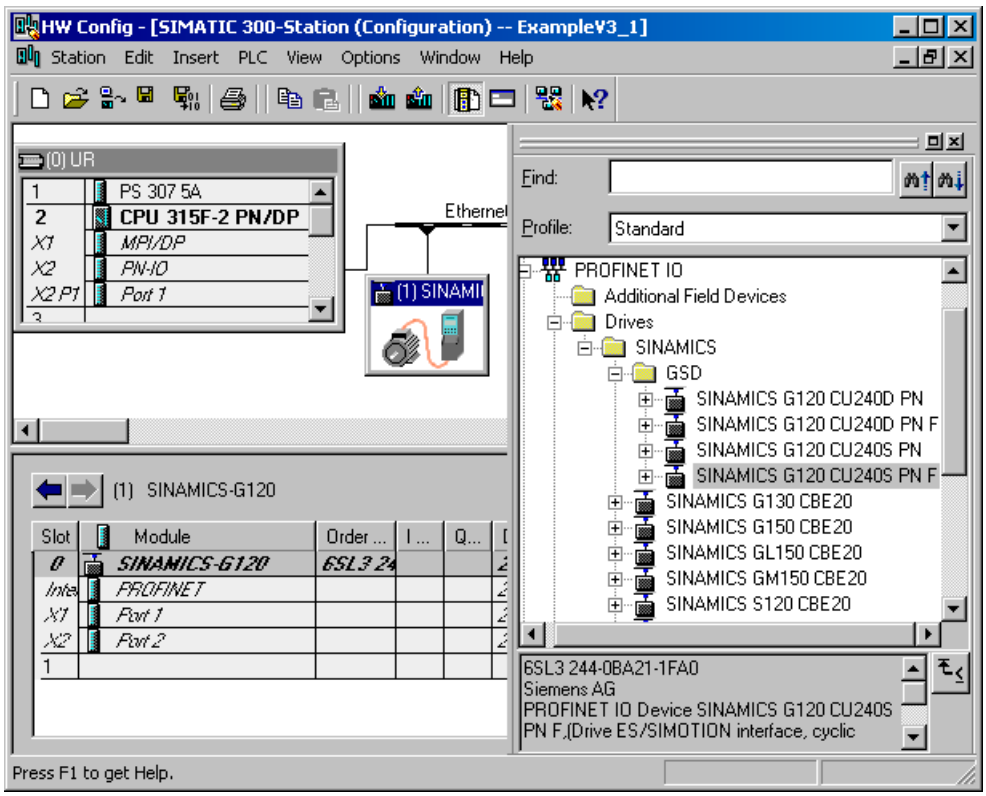

3. Double click onto e.g. "SINAMICS G120 CU240S PN F" to add the G120 inverter as I/O device to the subnet.

Setting the properties of the G120 inverter as PROFINET I/O device

Double click SINAMICS G120 in the station window to open the properties dialog then:

- Assign a unique device name or accept the name, the system offers.
- Assign an IP adress or accept the one, the system offers (standard setting).
- Confirm your settings with OK.

Selecting a telegram

Note

The inverters are able to operate with different telegram types. The telegram, selected in the inverter via P0922, must be identical to the type selected in HW Config.

---

1. Open "PROFINET IO > Drives > SINAMICS > GSD > Relevant drive" in the hardware catalog
2. Select the telegram and add it, e.g. by double click, to the sub-slot in the station window.

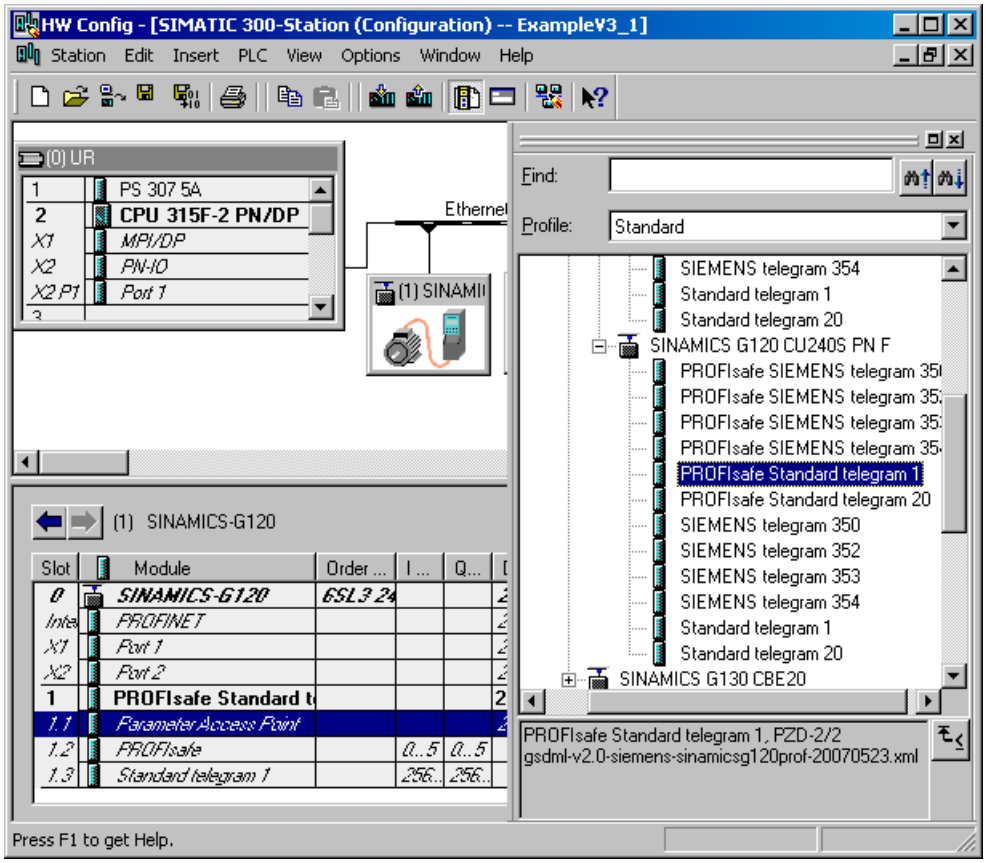

3. With a double click on the telegram you open the properties dialog. Enter a name for the telegram or accept the one, the systems offers.
4. Confirm your setting with OK.

Setting the telegramm addresses

Addresses can be set by opening the dialog box via double click for:

- Parameter access point
- Profisafe telegram
- Selected telegram type

Set the addresses to the appropriated values or accept the ones, the system offers and confirm your settings with OK. The addresses set here must be used in the S7- program for the cyclic data transfer.

Once all inverters with their telegrams are added, save the project and compile.

See also

Download GSDML (http://support.automation.siemens.com/WW/view/en/22339653/133100)

6.5.4.1 Read Parameters

Requirements

- The PROFInet IO controller and supervisor have been commissioned and are fully operational.
- Communication between supervisor, controller and device is operational.
- The supervisor can read and write data sets in conformance with Base mode parameter access.

Read/write request

For the acyclic communication a read/write request must be send to the drive with RD_REC (SFB52) and WR_REC (SFB53)

```
Network 1: Write DS47
With SFB53 "WR_REC" (write record), you transfer the data record contained in
the Record (DB900) to the addressed module.

      CALL  "WRREC" , "IDB_SFB53"
       REQ   :=M8.0                      // write request
       ID    :=DW#16#69B                 // diagnostic address 1691 of PAP
       INDEX :=47                        // data set 47 acc. ProfiDrive Profil
       LEN   :=240                       // length of Data set (here 240 bytes for DS47)
       DONE  :=M9.0                      // write record finished
       BUSY  :=M9.1                      // BUSY = 1: write process running
       ERROR :=M9.2                      // ERROR = 1: error while writing
       STATUS:=MD10                      // state of data set resp. fault information
       RECORD:="SEND_DATA_DS47".SEND_DATA    // data set to be send


      U     M      9.0                   // Reset write request after:
      O     M      9.1                   // success or error
      O     M      9.2
      R     M      8.0

Network 2: Read DS47
With SFB52 "RD_REC) (read record), you read the data record with the number
RECNUM from the addressed module. The data record read is entered in the
destination area (DB901), wich is indicated by the RECORD parameter.

      CALL  "RDREC" , "IDB_SFB52"
       REQ   :=M8.1
       ID    :=DW#16#69B                 // diagnostic address 1691 of PAP
       INDEX :=47                        // Data set 47 acc. ProfiDrive Profil
       MLEN  :=240                       // length of Data set (here 240 bytes for DS47)
       VALID :=M9.3                      // new data set received, is valid
       BUSY  :=M9.4                      // BUSY = 1: read process running
       ERROR :=M9.5                      // ERROR = 1: error while reading
       STATUS:=MD14                      // state of data set resp. fault information
       LEN   :=MW18                      // length of read data set information
       RECORD:="RECEIVE_DATA_DS47".RECEIVE_DATA    // target area for read data set


      U     M      9.3                   // Reset read request after:
      O     M      9.4                   // success or error
      O     M      9.5
      R     M      8.1
```

Figure 6-14 Acyclic communication for request and response data block.

The request is to be handled using a request and response data block.

Create request/response Data block, e.g. DB900/DB901, to write or write parameters

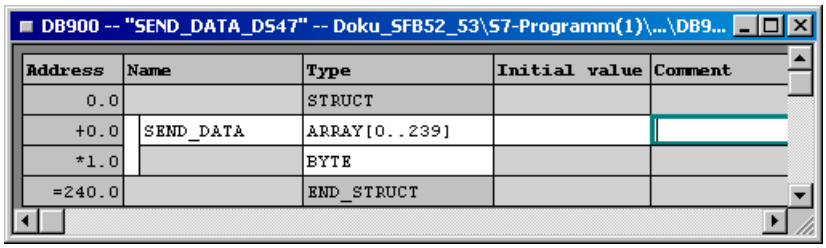

Table 6- 36 Structure of a parameter request

Request header	Request_reference = 0x01	Request_ID = 0x01
	Drive_object_ID = 0x00	No_of_parameters = 0x02
Parameter Address_01	Attribute_parameter_01 = 0x10	No_of_elements_01 = 0x08
	parameter_number_01 (PNU) = 03B3 (= 947 dec, P0947)	
	Subindex_01 = 0x00	
Parameter Address_02	Attribute_parameter_02 = 0x10	No_of_elements_02 = 0x08
	parameter_number_02 (PNU) = 03B5 (= 949 dec, P0949)	
	Subindex_02 = 0x00	

Information about the parameter request:

- Request_reference:
  The value is selected at random from the valid value range. The request reference establishes the relationship between request and response.
- Request_ID:
  0x01 --> This identifier is required for a read request.
- Drive_object_ID:
  0x00 -> Device-Representative.
- No_of_parameters:
  0x02 --> Two parameters are read.
- Attribute_parameter_01:
  0x10 --> The parameter values are read.
- No_of_elements_01:
  0x08 --> The current fault incident with 8 faults is to be read.
- Parameter_number_01:
  03B3 --> P0947 (last fault code) is read.
- Subindex_01:
  0x00 --> Read access starts at index 0
- Attribute_parameter_02:
  0x10 --> The parameter values are read.
- No_of_elements_02:
  0x08 --> The current fault incident with 8 faults is to be read.
- Parameter_number_02:
  03B5 --> P0949 (last fault code) is read.
- Subindex_02:
  0x00 --> Read access starts at index 0.

6.6 Communication via USS

6.6.1 Universal serial interface (USS)

Data

Parameter range:	P2010 … r2037
Warnings:	–
Faults:	F0071, F0072
Function chart number:	FP2500, FP2510, FP2600, FP2610

Description

Using the Universal Serial Interface (USS) protocol, a user can establish a serial point-to-point data link (RS232 interface) and a serial bus data link between a higher-level master system and several slave systems (RS485 interface). Master systems can be e.g. PLCs (e.g. SIMATIC S7-200) or PCs. The inverters are always the slaves on the bus system.

The USS protocol allows the user to implement both automation tasks with cyclical telegram traffic (a fixed telegram length is necessary) as well as visualization tasks. In this case, the protocol with variable telegram length is advantageous, as texts and parameter descriptions can be transferred in one telegram without chopping up the information.

USS via RS232

With the RS232 interface only direct connections (point-to-point) are possible with cable lengths of 2 m … 5 m typically. This is typically used to commission a drive where the commissioning software (e.g. STARTER) runs on a PC. For this configuration the optional PC Connection Kit is available.

USS via RS485

With the RS485 interface communication networks can be constructed. The topology must be that of a line with the first and last devices of the line terminated with termination resistors. The figure shows the termination DIP switch on the CU240S. Default position is OFF (no termination resistor).

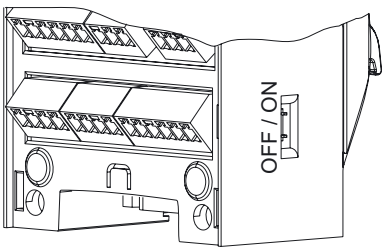

Short branches are possible to connect the devices. Up to 31 inverters can be integrated as slaves into a network with a PLC as master.

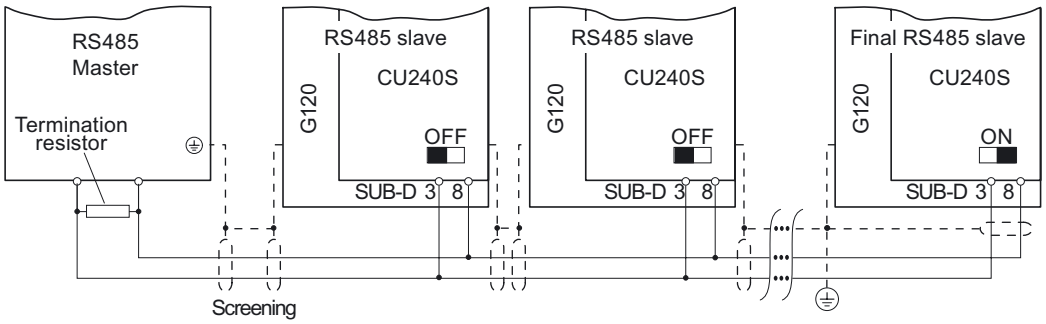

Figure 6-15 USS network via RS485

⚠ CAUTION
A difference in earth potential between master and the slaves in an RS485 network can cause damage to the Control Unit of the Inverter. Care must be taken to ensure that the master and slaves all have the same ground level.

6.6.2 SUB D connector for RS485 interface

Socket

The Control Units CU240S have a 9-pin female sub-D socket for connecting the inverter via an RS485 interface.

Table 6- 37 PIN assignment of the 9-pin sub-D socket

	Pin	Designation	Description
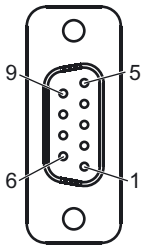	1	-	Unused
	2	-	Unused
	3	RS485P	Receive- and transmit signal (+)
	4	-	Unused
	5	0 V	Ground reference
	6	-	Unused
	7	-	Unused
	8	RS485N	Receive- and transmit signal (-)
	9	-	Unused
	X	Screen (casing)	Potential equilisation

Connector

A standard 9 pin sub-D connector can be used for USS connection via RS485.

Table 6- 38 Technical data of standard 9-pin sub-D connector for RS485

Standard 9 pin sub D connector	
PG socket	No
Max. baud rate	115200 baud
Outgoing cable unit	180°

Bus termination

The RS485 termination can be activated via switches on the housing of the SINAMICS G120.

The bus termination switch is illustrated in figure "Control Units CU 240S" in section "Layout and Block Diagram".

Cable Lengths and number of devices

Table 6- 39 Max. number of devices and max. cable length

Baudrate in bit/s	Max Number of Devices	Max Cable Length
9600	32	1200 m
19200	32	1200 m
38400	32	1200 m
57600	32	1200 m
115200 (maximum baudrate)	30	1000 m

6.6.3 Structure of a USS Telegram

Description

The following figure shows the structure of a typical USS telegram.

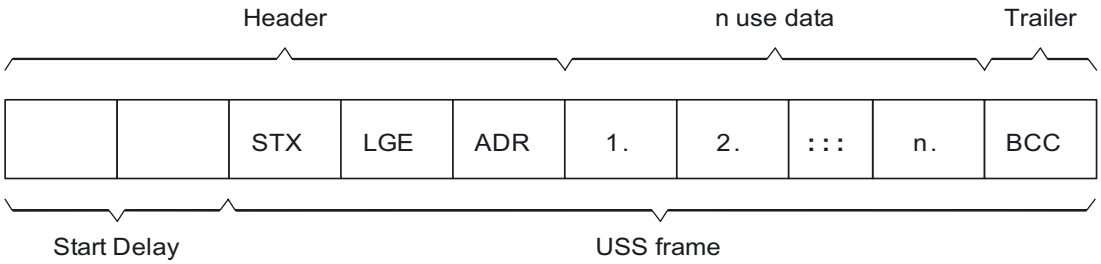

Figure 6-16 Structure of USS telegram

Variable length telegrams and fixed length telegrams can both be used. This can be selected using parameters P2012 and P2013 to define the PZD and PKW lengths.

The most common fixed length application is shown below:

STX	1 Byte	
LGE	1 Byte	
ADR	1 Byte	
use data	PKW	8 Bytes (4 Words: PKE + IND + PWE1 + PWE2)
	PZD	4 Bytes (2 Words: PZD1 + PZD2)
BCC	1 Byte	
Sum :	16 Bytes (LGE indicates 14 bytes as STX and LGE are not counted in LGE)	

Start Delay

The length of the start delay is at least the time of two characters and depends on the baudrate.

Table 6- 40 Length of start delay

Baudrate in bit/s	Transfer time per character (= 11 bit)	Transfer time per bit	Min. Start Delay
9600	1.146 ms	104.170 µs	> 2.291 ms
19200	0.573 ms	52.084 µs	> 1.146 ms
38400	0.286 ms	26.042 µs	> 0.573 ms
57600	0.191 ms	17.361 µs	> 0.382 ms
115200	0.059 ms	5.340 µs	> 0.117 ms

Note: The time between characters must be smaller than the start delay.

STX

The STX field is a single byte ASCII STX character (0x02) used to indicate the start of a message.

LGE

The LGE is a single byte field, indicating the number of bytes which follow this in the telegram. It is defined as the sum of

- use data characters (quantity n)
- address byte (ADR)
- block check character (BCC)

The actual total telegram length will of course be two bytes longer as STX and LGE itself are not counted in the LGE.

ADR

The ADR field is a single byte containing the address of the slave node (e.g. inverter). The individual bits in the address byte are addressed as follows:

7	6	5	4	3	2	1	0
Special	Mirror	Broadcast	5 address bits				

- Bit 5 is the broadcast bit.
  If it is set to 1, the message is a broadcast message and will be acted upon by all inverters on the serial link. The node adress is not evaluated. The USS protocol specification requires certain settings in the PKW area, refer to the later example on using USS broadcast mode.
- Bit 6 = 1 indicates a mirror telegram.
  The node address is evaluated and the addressed slave returns the telegram unchanged to the master.

Bit 5 = 0 and bit 6 = 0 and bit 7 = 0 means normal data exchange for units. The node address (bit 0 … bit 4) is evaluated.

BCC

BCC means block check character. It is an exclusive OR (XOR) checksum over all telegram bytes except the BCC itself.

6.6.4 Use data area of USS telegram

Basic USS parameters

General rule: Index[0] for USS on RS485, Index[1] for USS on RS232.

P2010	USS Baudrate [2400 … 115200] baud
P2011	USS Slave Address: [0 … 30]
P2012	USS PZD Length: [0 … 2 … 8] words
P2013	USS parameter channel length: [0, 3 (3 words), 4 (4 words), 127 (variable length)]
P2014	USS Telegram Off-Time: [0 … 65535] ms. ‘0’ = no timeout check!
R2015	Received PZD via USS on RS232
P2016	BICO Selection for PZDs to be sent via USS on RS232
R2018	Received PZD via USS on RS485
P2019	BICO Selection for PZDs to be sent via USS on RS485
r2032	Control Word 1 from USS on RS232
r2033	Control Word 2 from USS on RS232
r2036	Control Word 1 from USS on RS485
r2037	Control Word 2 from USS on RS485

Use data structure

The use data area of the USS protocol is used for transferring the application data, which are the parameter channel and process data (PZD).

The application data occupies the bytes within the USS frame (STX, LGE, ADR, BCC). The size of the application data can be configured by parameters p2013 and p2012. The following figure shows the structure and order for the parameter channel and process data (PZD).

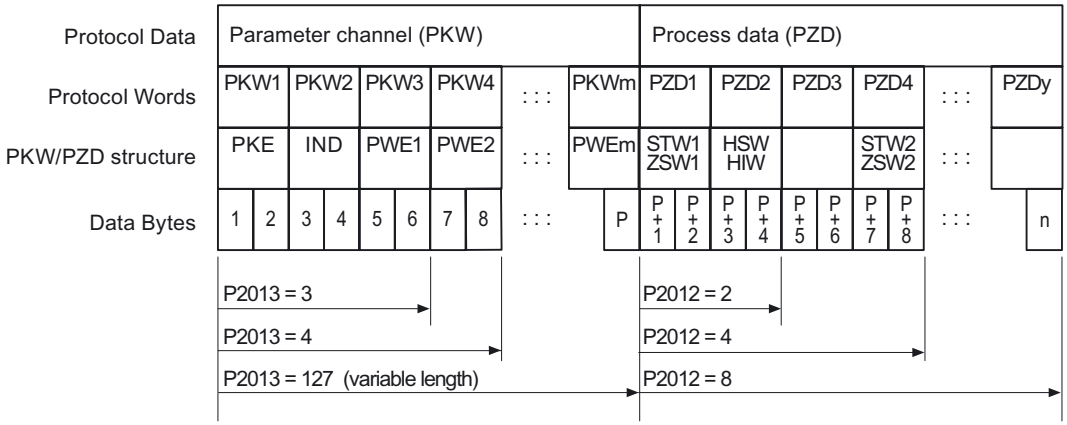

Figure 6-17 USS use data structure

The length of the parameter channel is determined by parameter P2013, that for the process data by parameter P2012. If either no parameter channel or no PZD is required, the corresponding parameters can be set to zero ("PKW only" or "PZD only" respectively).

It is not possible to transmit "PKW only" and "PZD only" alternatively. If both channels are required they must be transferred together.

6.6.5 USS Parameter Channel

Parameter channel

The USS protocol defines for the inverters, the use data structure with which a master can access the inverter slaves. The parameter channel can be used to monitor and/or change any parameter in the inverter. For detailed information, refer the section "Data Structure of the Parameter Channel".

Parameter channel		
PKE	IND	PWE
1st word	2nd word	3rd and 4th word

Abbreviations: PKE : Parameter identifier
IND : Index
PWE: Parameter value

Figure 6-18 Structure of the parameter channel in the telegram structure

Parameter value (PWE)

For acyclic communication via USS, the number of PWEs can vary. For 16 bit values one PWE is required. If 32 bit values are exchanged, two PWEs are required.

Note

Data types U8 will be transferred as U16 with the upper byte zero. Arrays of U8 will therefore require one PWE per index.

A parameter channel for 3 words is a typical data frame for exchanging 16 bit data or alarm messages. The mode with a fixed word length of 3 is used with p2013 = 3.

A parameter channel for 4 words is a typical data frame for exchanging 32 bit data variables and requires p2013 = 4.

A parameter channel for a flexible word length is used with p2013 = 127. The length for telegrams between master and slave can have a different number of PWEs.

If the length of the parameter channel is fixed (p2013 = 3 or 4), then the Master must always correctly send either 3 or 4 words in the parameter channel. Otherwise, the slave will not respond to the telegram. The slave response will be either 3 or 4 words as well. If a fixed length is used, this should be 4, as 3 would not be sufficient to support many of the parameters (i.e. double words). For variable length of the parameter channel (p2013 = 127) the master sends only the necessary number of words for the task in the parameter channel. The length of the response telegram will also only be as long as necessary.

6.6.6 Timeouts and other errors

Telegram Timeouts

For the timeout monitoring, the character run time is important:

Table 6- 41 Character run time

Baudrate in bit/s	Transfer time per character (= 11 bit)	Transfer time per bit	Character run time
9600	1.146 ms	104.170 us	1.146 ms
19200	0.573 ms	52.084 us	0.573 ms
38400	0.286 ms	26.042 us	0.286 ms
115200	0.059 ms	5.340 us	0.059 ms

The following figure shows the meaning of the "residual run time":

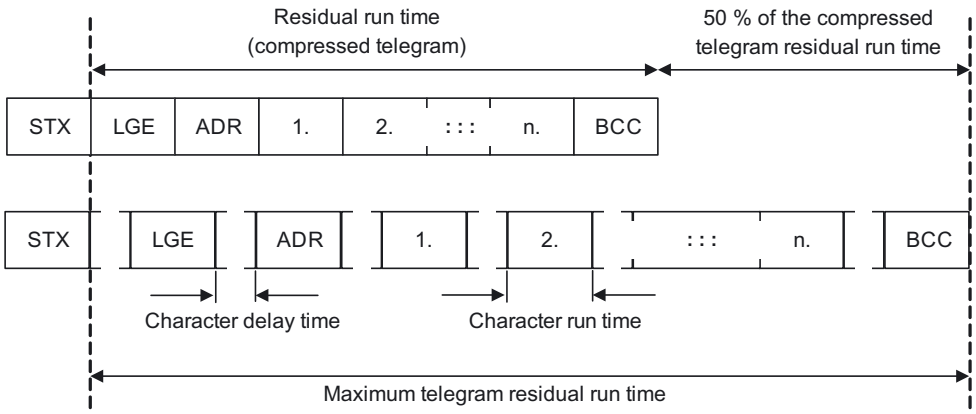

Figure 6-19 Residual Run Time and Character Delay Time

The character delay time can be zero and must be smaller than the start delay!

The following figure shows the various delays and transmission times:

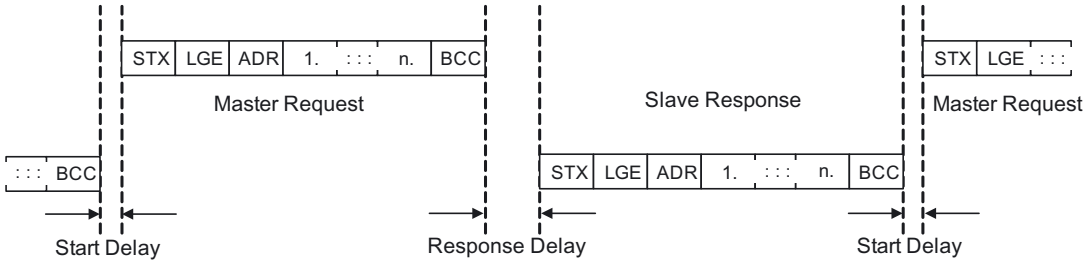

Figure 6-20 Start Delay and Response Delay

Character delay time	timeout between characters and must be smaller than 2 time the character run time but can be zero
Start delay	timeout between USS messages. Must be > 2 * character run time
Response delay	Processing time of the slave. Must be < 20 ms, but larger than the start delay!
Residual run time	< 1.5 * (n + 3) * character run time (where n = number of data bytes)
"Slave Transmitting"/ "Master Transmitting"	is the sum of "Start delay", "Response delay" and "Residual run time"

The master must check the following times:

- "Response delay" = reaction time of slave to USS request
- "Residual run time" = transmission time of response telegram sent by slave

The slave must check the following times:

- "Start delay" = timeout between USS messages
- "Residual run time" = transmission time of request telegram coming from master

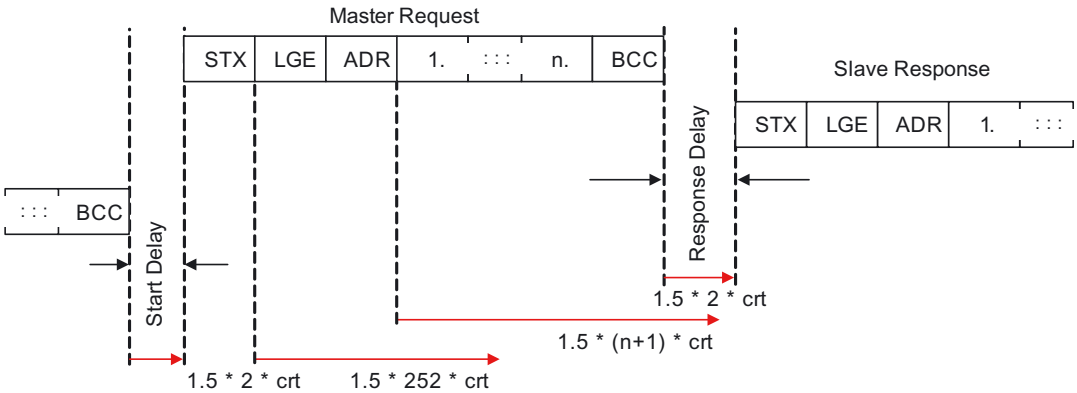

Figure 6-21 Timeout Checks on USS Slave

The timeout margins that are verified on the USS slave are shown in the figure above. "crt" stands for "character run time". The factor "1.5" is the maximum margin. The "start delay" and the minimum "response delay" are fixed minimum values in software. The "residual run times" are monitoring values that cause a timeout if they are exceeded by the character reception.

Process Timeouts

Parameter P2014 determines the timeout in ms. A value of zero disables the timeout check. Parameter P2014 checks the cyclic refresh of Bit10 in control word 1.

When USS is configured as command source of the drive and P2014 is not zero, Bit10 of the received control word 1 is examined. If the bit is not set, an internal timeout counter is incremented. If the threshold of p2014 is reached, a process timeout fault is set by the drive.

Other errors

P2025 = USS rejected

P2026 = USS character frame error

P2027 = USS overrun error

P2028 = USS parity error

P2029 = USS start not identified

P2030 = USS BCC error

P2031 = USS length error

6.6.7 USS Process Data Channel (PZD)

Description

In this area of the telegram, process data (PZD) are continually exchanged between the master and slaves. Dependent of the direction the process data channel contains data for a request to the USS slaves or for a response to the USS master. In the requests are control words and setpoints for the slaves and in the responses are status words and actual values for the master.

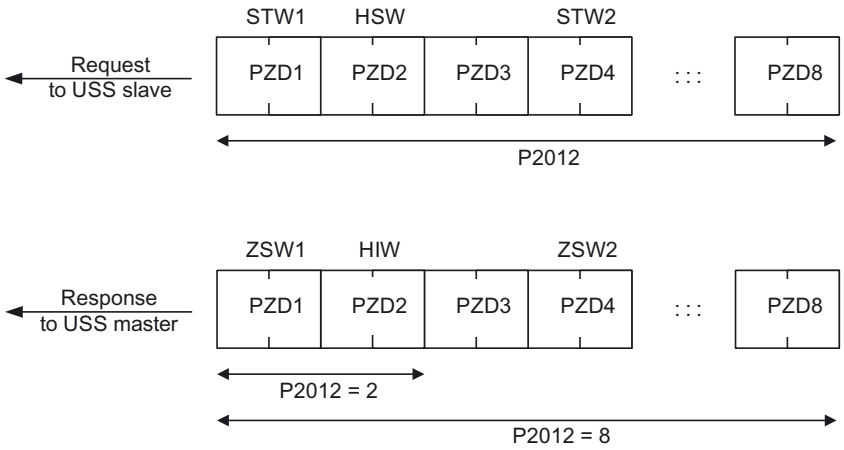

Figure 6-22 Process data channel

The number of PZD words in a USS-telegram are determined by parameter P2012, where the first two words are:

- Control word 1(STW1) and main setpoint (HSW)
- Status word 1 (ZSW1) and actual value (HIW)

If P2012 is greater or equal to 4 the additional control word (STW2) is transferred as the 4th PZD word (default setting).

The sources of all other PZDs are defined with parameter P2019 for a RS485 interface and P2016 for a RS232 interface.

Operation 7

7.1 ON/OFF Commands

The G120 inverter provides the following ON/OFF commands:

- ON / OFF (ON/OFF1)
- Coast stop (OFF2)
- Quick stop (OFF3)

Description

ON / OFF (ON/OFF1)

The ON/OFF1 function is an inter-coupled command. When the ON command is withdrawn, then OFF1 is directly activated.

- Frequency setpoint = 0

  The inverter ramps down to standstill in the period of time set in P1121.
- If parameterized, the motor holding brake is closed (P1215) when zero speed is detected. When the brake application time (P1217) expires, the pulses are suppressed.

  Zero speed is detected, if one of the following events occur:
  - The actual speed drops below the Switch-off frequency (P2167).
  - The monitoring time (P1227), started when the speed setpoint ≤ Switch-off frequency (P2167), has expired.

Coast stop (OFF2)

- Instantaneous pulse suppression, the drive coasts to a standstill.
- If parameterized, the motor holding brake is closed immediately.
- Power-on inhibit is activated.

  Before restarting, an OFF2 must be confirmed, e. g. via the key FN on the BOP. For certain applications, it is useful to link the confirmation of an OFF2 or an OFF3 to the ON/OFF function.

Note

If after a period of time, set in P1227, an OFF1 or an OFF3 has been unable to ramp down the motor to Switch-off frequency (P2167), the system forces an immediate OFF2.

Quick stop (OFF3)

- Frequency setpoint = 0
- The inverter ramps down to standstill in the period of time set in P1135.
- If parameterized, the motor holding brake is closed, when zero speed is detected. When the brake application time (P1217) expires, the pulses are suppressed.

  Zero speed is detected, if one of the following events occur:

  – The actual speed drops below the Switch-off frequency (P2167).

  – The monitoring time (P1227), started when the speed setpoint ≤ speed threshold (P2167), has expired.
- Power-on inhibit is activated.

  Before restarting, OFF3 must be confirmed, e. g. via the key FN on the BOP.

⚠ CAUTION
If in sensoless vector mode, for example, due to an overload of the motor the inverter loses orientation. It will not be possible to switch off using an OFF1 or an OFF3 command. In this case it is necessary to initiate an OFF2 command or disable the pulses using P0054.3.

⚠ DANGER
During power off, hazardous loads must be secured by a motor holding brake. To avoid severe personal injury and property damage, make sure, that a motor holding brake is established in the drive system. Use SINAMICS G120 brake sequence control (P1215, P0346, P1216, P1217, P1080) to control the motor holding brake during power off.

Sources for ON/OFF command

For standard Control Units (CU240S), the command source for ON/OFF is the digital input 0 (DI0).

For PROFINET or PROFIBUS Control Units, the communication interface is used as command source for ON/OFF.

In addition the following sources are selectable via P0700:

- Digital inputs (P0700 = 2)
- BOP (P0700 = 1)
- STARTER (P0700 = 4)
- A higher-level control system (P0700 = 6)

Refer to Commissioning section for details.

ON/OFF via DI/DO

The ON command requires a permanent signal.

ON/OFF via BOP

To power the inverter ON/OFF, press the following keys on the BOP:

I (Green)	ON	
O (Red)	OFF1	Press once
	OFF2	Press twice or pressing once for a longer period of time

ON/OFF via a higher-level control system

Via a serial interface, you switch ON/OFF the inverter using a higher-level control system, e. g. a controller S7-300.

Note

The 2-/3-wire control provides special ON/OFF methods. For detailed information, refer to the Function Manual.

7.2 Operation States Displayed via LED

7.2.1 LED Display

Status display

The SINAMICS G120 provides LEDs to show the operating states for standard or fail-safe inverters.

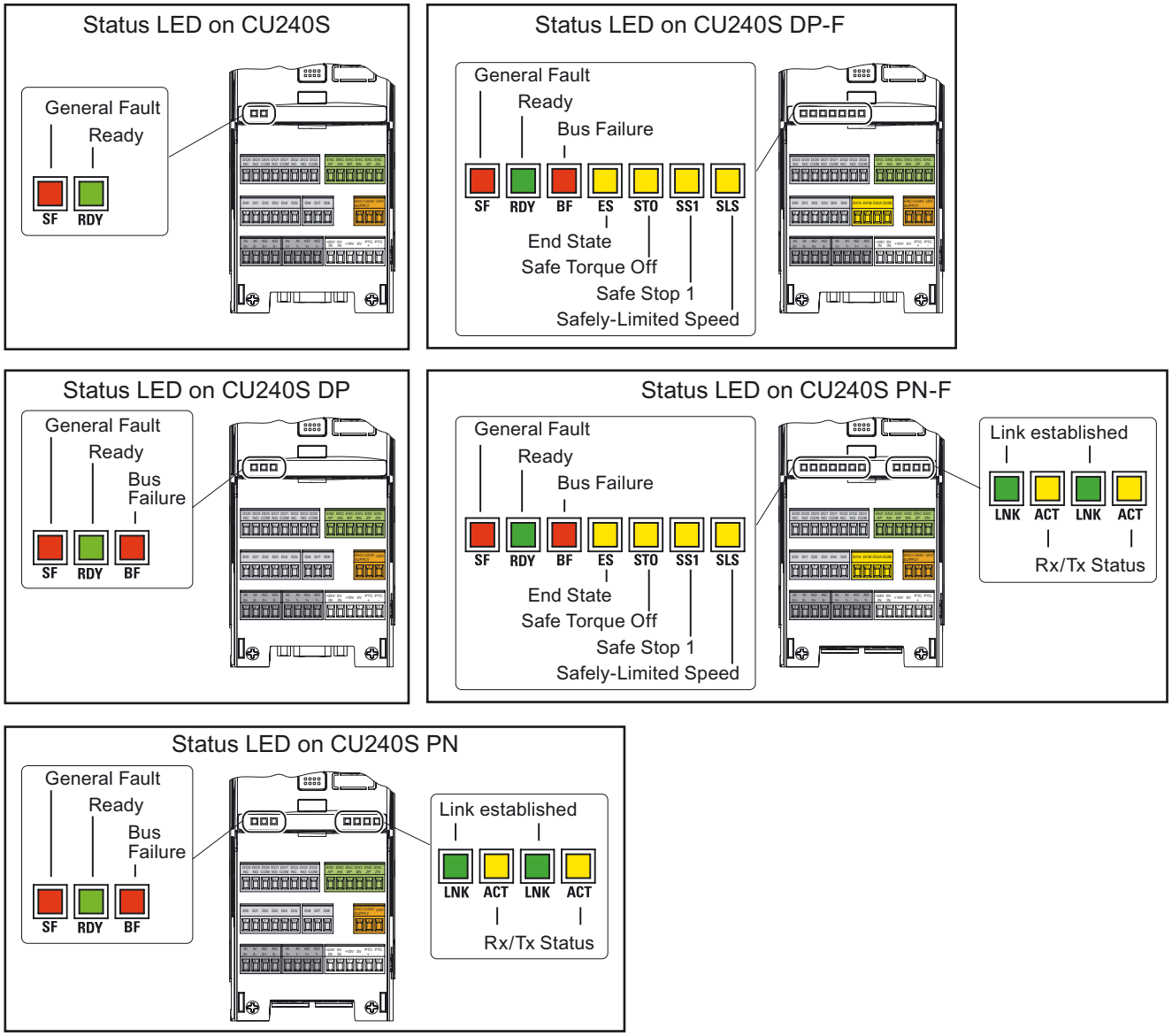

Figure 7-1 State LED on the CU240S, CU240S DP, CU240S DP-F, CU240S PN

Behavior of the status LED

	CU240S	CU240S DP	CU240S DP-F	CU240S PN	CU240S PN-F
System-Fault (SF) • ON: A general system error either software or hardware related is indicated. • Flashing: Download from MMC runs	x	x	x	x	x
Ready (RDY) • ON: The inverter is ready to run or running. • Flashing: Commissioning or download from MMC runs	x	x	x	x	x
Bus-Failure (BF) • ON: Bus failure, no connection to the DP-Master / PROFInet I/O controller (searching for baud rate) A bus failure is defined as signaling problem on the bus itself. Faults according to the inner data structure of the transmitted communication frames (e.g. CRC check of PROFIsafe telegram) are not denoted as bus failure. Such failures are indicated by the SF LED. • Flashing: I/O device is not configured or is wrongly configured (baud rate found, no data exchange).		x	x	x	x
Link-established (LNK) • ON: Link established • OFF: No link established				x	x
RX/TX (ACT) • ON: Data transfer • OFF: No data tansfer				x	x
End-state (ES) • ON: The end state of a triggered fail-safe function (flashing LED) has been reached. • Flashing: Safety commissioning or download from MMC runs			x		x
Safe Torque Off (STO) Safe Stop 1 (SS1) Safely-Limited Speed (SLS) • ON: Function parameterized • Flashing: Activated • All Safety LEDs flashing: Safety commissioning or download from MMC runs • Flashing and LED ES ON: End state reached			x		x

CU states displayed via LED

Note

○ This symbol indicates that the LED state (on, off or flashing) is not relevant for the corresponding CU state

States on standard CUs	Prio	SF	RDY
Commissioning	1	■/■	▚
Firmware update from MMC / parameter download	1	■/■	▚
General faults	1	■	■
Ready	3	■	■

States on PROFIBUS DP CUs	Prio	SF	RDY	BF
Commissioning	1	■/■	▚	○
Firmware update from MMC / parameter download	1	■/■	▚	○
General faults	3	■	■	○
Bus failure (no data)	3	■/■	■/■	▚
Bus failure (search baud rate)	3	■/■	■/■	■
Ready	4	■	■	○

Note

Control Unit with PROFIBUS-DP interface - operation using terminals

If a Control Unit with a PROFIBUS-DP interface is operated using the terminals, the fieldbus LED will indicate a failure. To avoid this situation, the fieldbus off-time in Parameter P2040 should be set to "0".

States on Profinet CUs	Prio	SF	RDY	BF	LNK	ACT
Commissioning	1	■/■	▚	○	■/■	□/■
Firmware update from MMC / parameter download	1	■/■	▚	○	■/■	□/■
General faults	3	■	■	○	■/■	□/■
Bus failure (no data)	3	■/■	■/■	▚	■	■
Bus failure (search baud rate)	3	■/■	■/■	■	■	■
PROFIsafe failure	3	■	■	○	■/■	□/■
Link established	3	■/■	■/■	■	■	□/■
No link established	3	■/■	■/■	■	■	■
Data receive / transfer	3	■/■	■/■	■	■	□
Ready	4	■	■	○	■/■	□/■

States on failsafe CUs	Prio	SF	RDY	BF	ES	STO	SS1	SLS
Commissioning	1	■/■	■■	○	■/■	○	○	○
Safety commissioning	1	■/■	■■	○	■■	■■	■■	■■
Firmware update from MMC / parameter download	1	■/■	■■	○	■■	■■	■■	■■
Passivated STO triggered	2	■	■	○	■	■	■	■
General faults	3	■	■	○	■/■	○	○	○
Bus failure (no data)	3	■/■	■/■	■■	■/■	○	○	○
Bus failure (search baud rate)	3	■/■	■/■	■	■/■	○	○	○
Ready	4	■	■	○	■/■	○	○	○
STO reached	5	■/■	■	○	■	■■	○	○
SS1 reached	5	■/■	■	○	■	○	■■	○
SLS reached	5	■/■	■	○	■	○	○	■■
STO triggered	6	■/■	■	○	■	■■	○	○
SS1 triggered	6	■/■	■	○	■	○	■■	○
SLS triggered	6	■/■	■	○	■	○	○	■■
STO parameterised	7	■/■	■	○	■	■	■/■	■/■
SS1 parameterised	7	■/■	■	○	■	■/■	■	■/■
SLS parameterised	7	■/■	■	○	■	■/■	■/■	■

Troubleshooting

8

8.1 Faults and Alarms

Description

The inverter indicates unfavourable states as faults and alarms.

- **Alarms**

  Alarms are not displayed via the LEDs on the Control Unit. Alarms require no acknowledgement and cause no systems reaction. The alarm number is displayed on STARTER or a higher-level control system.

- **Faults**

  Faults indicate a severe unfavourable state. If a fault occurs, the inverter powers off and the LED "SF" on the Control Unit is active.

  The fault number is displayed on BOP, STARTER or a higher-level control system. You cannot restart the inverter not until the fault is remedied. After remedy the fault requires an acknowledgement.

Note

For detailed descriptions of the faults and alarms, refer to the Parameter Manual

Parameterizing faults and alarms

Faults

For fault handling, regard the following parameters:

- Stored in parameter r0947 under their code number, e. g. F0003 = 3
- Associated error value stored in parameter r0949 (0 = no error value)
- Time stamp of the fault stored in r0948 and can be read out
- Number of fault messages (P0952) is stored in r0947 and can be read out

Alarms

For alarm handling, regard the following parameter:

- Stored in parameter r2110 under their code number and can be read out, e. g. A0503 = 503. The value 0 indicates, that no warning is applied. Via the index, you have access to the two actual alarms and the last two historical alarms.

Display

Faults and alarms are displayed on the following components:

- BOP

  The status display of the BOP indicates the occurring faults and alarms. If several messages arise, the display scrolls constantly through all active faults.

- STARTER

  The detail view in the alarms tab displays information, faults and alarms in the table. In th.e field "messages" the fault or information/alarm text is displayed in plain text.

- A higher-level control system. For detailed information, refer the respective manual of the control system.

General acknowledgement of faults

To reset the fault code, one of the following methods can be used:

- Power cycle the inverter.

  (Switch OFF/ON the main supply voltage and the external 24 V supply for the Control Unit.)

- Press the key **FN** on the BOP.
- Activate the default setting of DI 2.
- Set bit 7 in control word 1 (r0054).

Special acknowledgement of faults

The following faults messages can only be acknowledged by a power cycle:

- **F00051** Parameter EEPROM fault
- **F00052** Power stack fault
- **F00061** Automatic Download, MMC is not fitted
- **F00062** Automatic Download, MMC contents invalid
- **F00063** Automatic Download. MMC contents incompatible
- **F00064** Drive attempted to do an Automatic Download during startup
- **F01601** System startup error

Note

The drive cannot resume operation until all active faults have been acknowledged. Clearing F00395 is described in the section "Message F00395" of this manual.

8.2 Diagnostics Display

Overview

The G120 inverter provides the following types of diagnostic display:

- LEDs on the Control Unit

  A detailed overview on the LED states is given in section "Operation States displayed via LED" in this manual.

- Alarm and fault numbers

  You use the alarm and fault numbers for troubleshooting via BOP and STARTER. For details for troubleshooting with STARTER, refer to the respective online help.

- Diagnostic parameters

  For troubleshooting via a higher-level control system

8.3 Troubleshooting with the BOP

Diagnostics using alarm and fault numbers

The BOP must be fitted to the Control Unit. If an alarm or fault condition occurs, the BOP displays appropriate alarm or fault number.

If an alarm occurs the alarm number is displayed and the inverter will continue to run, although it is possible that it may run in an unexpected manner depending upon the alarm condition.

If a fault occurs, the fault number is displayed and the inverter is stopped.

If a line supply failure interrupts commissioning, then inconsistencies can occur regarding the parameterization. In this case, it is important that the commissioning is re-started with a factory reset to establish the original factory settings.

Table 8- 1 Alarm and fault numbers, cause and remedy

Alarm Number	Meaning	
A0700	Cause	The parameter or configuring settings by the PROFIBUS master are invalid.
	Remedy	Correct the PROFIBUS configuration
A0702	Cause	The link to the PROFIBUS is interrupted.
	Remedy	Check connector, cable and PROFIBUS master.
A0703	Cause	No setpoints or invalid setpoints (control word = 0) are being received from the PROFIBUS master.
	Remedy	Check setpoints from the PROFIBUS master. Switch SIMATIC CPU to "RUN".
A0704	Cause	At least one configured internode transmitter is not yet active, or has failed.
	Remedy	Activate internode transmitter.
A0705	Cause	No actual values received from inverter.
	Remedy	None (fault is with the inverter).
A0706	Cause	PROFIBUS DP software error.
	Remedy	None diagnostic parameter r2041.
A0710	Cause	Inverter has detected failure of PROFIBUS communications link.
	Remedy	Communication interface on Control Unit may be broken.
A0711	Cause	Invalid value of PROFIBUS parameter.
	Remedy	Check P0918 address and P2041.
F0070	Cause	No communication via PROFIBUS. Triggered by A0702, A0703 and A0704. The telegram failure time set in P2040 has run out. Details see section "Faults and Alarms" in the Parameter List.
	Remedy	Check connection of the communication devices and ensure that a valid control word is being used.

Motor failure without fault or warning message

If the motor fails to start when the ON command has been given:

- Check that P0010 = 0.
- Check the inverter state via r0052.
- Check command and setpoint source (P0700 and P1000).
- Check, if the motor data relate to the inverter data power range and voltage.

Note

For troubleshooting, pay regard to the "Installation Check List" in the chapter "Installation" of this manual.

8.4 Troubleshooting via the Control System

Diagnostics using diagnostic parameters

The following diagnostic parameters are set via a higher-level control system. This function is provided by Control Units, which communicate via PROFINET or PROFIBUS.

Identification of the communications components

The read-only parameter r2053 shows the information by which the various firmware components of the PROFIBUS DP interface can be identified.

Table 8- 2 Identification of communications firmware

Parameter	Meaning
r2053.00	0: Inverter cannot identify the communications interface
	1: PROFIBUS DP detected
	2: Not assigned
	56: Undefined communications error
r2053.01	Firmware version
r2053.02	Constant "0"
r2053.03	Firmware date (year)
r2053.04	Firmware date (day and month)

Standard diagnostics

When the parameter P2041.03 = 0, then by using the read-only parameter r2054 and it's indices, it is possible to obtain detailed diagnostic information regarding the PROFIBUS DP interface. This information is listed in the table below.

Table 8- 3 Standard diagnostics

Parameter	Meaning
r2054.00	PROFIBUS DP status:
	0: Off
	1: Baud rate search
	2: Baud rate found
	3: Cyclical data exchange
	(> 100: other diagnostic screen active)
r2054.02	Number of acyclical links with class 2 master (PC, BOP): 0 … 2
r2054.03	Error number of last unsuccessful parameter access operation through an acyclical link.
r2054.04	Parameter number of last unsuccessful parameter access operation
r2054.05	Sub-index of last unsuccessful parameter access operation

When parameter accessing errors occur, r2054.03 display the appropriate error number, these are listed in table below.

Table 8- 4 Parameter accessing error numbers

Number	Cause	Remedy
0 … 199:	Parameter access has been converted to a parameter channel request. Error detected in the inverter. Additional information is in r2054.05 and r2054.06: Parameter number, index word	
0	Parameter number does not exist	Check data block number
1	Parameter number cannot be modified	--
2	Minimum/maximum not reached or exceeded	--
3	Sub-index does not exist	Check data block offset
4	Access of single value with array identifier	Set data block offset = 0
5	Access to word with double word request or vice versa	Use correct data type (e.g. INT for word, DINT for double word)
6	Setting not allowed (resetting only)	--
7	Descriptive element cannot be modified	--
11	No status as master control	--
12	Key word missing	--
17	Request cannot be processed due to operating state	--
101	Parameter number currently deactivated	--
102	Channel not wide enough	--
104	Illegal parameter value	--
106	Request not implemented	--
200/201	Modified minimum or maximum not reached or exceeded.	Minimum or maximum can be further limited in operation
240 … 249:	Parameter access is incorrectly formatted. Error detected on the PROFIBUS DP. Additional information in r2054.05 and r2054.06: Parameter number or S7 data block number, sub-index or S7 data block offset.	
240	Error in variable address (no additional information)	Legal: "Data block" area
241	Data block number illegally formatted	Legal: 1 … 31999
242	Data block offset illegally formatted	Legal: 0 … 116
243	Illegal "type"	Legal: CHAR, BITE, INT, WORD, INT, DWORD, REAL
244	Illegal "Number of elements" on accessing parameter value	Legal: Effectively 2 or 4 bytes
248	Illegal text/description modification	--
249	Inconsistency in write request: "Type" and "Number of elements" does not match "Data type" and "Data length"	Error in communication device
250:	Parameter access has been converted to a parameter channel request. Response from inverter is seen as incorrect. Error detected on the PROFIBUS DP. Additional information can be seen in r2054.05 and r2054.06.	
250	Parameter channel response does not match request	Error in the inverter
251:	Error detected on the PROFIBUS DP; no additional information	
251	Response too long for response telegram	Error in communication device

Service and maintenance

9

I DT Technical support

24-hour technical support is provided by three main centers worldwide.

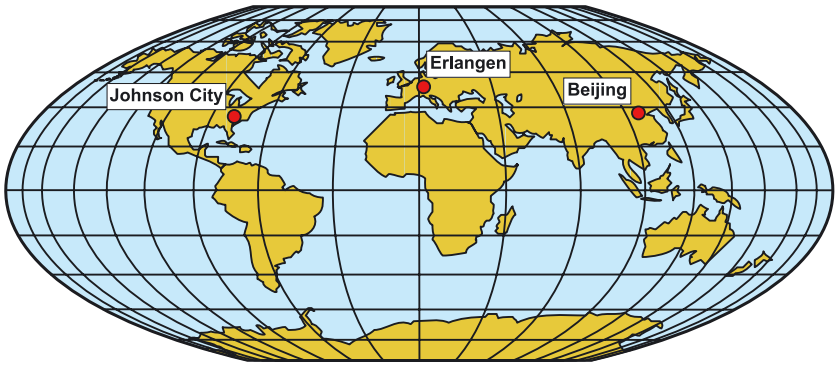

Figure 9-1 I DT Global service and support

Online Service and support

In the first instance for customer-support, contact should always be made with the regional (country based) sales/marketing/service organisations.

http://support.automation.siemens.com

For technical-support, the most optimised way to do this is via the Internet based Support-Request.

http://www.siemens.com/automation/support-request

Europe/Africa (Erlangen)

Internet Support-Request: http://www.siemens.com/automation/support-request

Tel: +49 (180) 5050 222
Fax: +49 (180) 5050 223
e-Mail: support.automation@siemens.com

America (Johnson City)

Internet Support-Request: http://www.siemens.com/automation/support-request

Tel: +1 (423) 262 2552
Fax: +1 (423) 262 2589
e-Mail: support.usa.automation@siemens.com

Asia/Pacific (Beijing)

Internet Support-Request: http://www.siemens.com/automation/support-request

Tel: +86 (1064) 757 575
Fax: +86 (1064) 747 474
e-Mail: support.asia.automation@siemens.com

Contact address

Should any questions or problems arise while reading this manual, please contact Siemens at the following address:

Siemens AG
I DT SD SPA PM4
Postfach 3269
D-91050 Erlangen
Germany

e-Mail: documentation.sd@siemens.com

Regional contacts

For questions regarding services, prices and conditions of technical support, please contact your local Siemens partner.

Technical data

10

10.1 CU240S Performance ratings

SINAMICS G120 Control Unit 240 (CU240S)

Table 10- 1 CU240S Performance ratings

Feature	Specification
Operating voltage	24 V DC from Power Module or External 24 V DC (20.4 V … 28.8 V, 0.5 A) supply using the control terminals 31 and 32
Control method (CU type dependent)	V/f control, output frequency between 0 Hz and 650 Hz: Linear V/f control, Linear V/f control with FCC, Parabolic V/f control, Multi-point V/f control, V/f control for textile applications, V/f control with FCC for textile applications, V/f control with independent voltage setpoint, Vector control, output frequency between 0 Hz and 200 Hz: Sensorless Vector Control, Sensorless Vector Torque Control, Speed control with Encoder feedback, Torque control with Encoder feedback.
PFH (only CU240S DP-F/PN-F)	The safety functions have a PFH (probabillity of failures per hour) value of 5 * 10-8
Fixed frequencies	16 programmable
Skip frequencies	4 programmable
Setpoint resolution	0.01 Hz digital; 0.01 Hz serial; 10 bit analog (motor potentiometer 0.1 Hz [0.1 % in PID mode])
Digital inputs (CU type dependent)	Up to 9 programmable digital inputs, isolated; PNP, SIMATIC-compatible, low < 5 V, high > 10 V, maximum input voltage 30 V
Analog inputs (CU type dependent)	Up to 2 programmable, both can be configured as additional digital inputs. 0 V … 10 V, 0 mA … 20 mA and -10 V … +10 V (AI0) 0 V … 10 V and 0 mA … 20 mA (AI1)
Relay outputs	3 programmable, 30 V DC / 0 A …0.5 A (resistive)
Analog outputs	2 programmable AO0: 0 V … 10 V & 0 mA … 20 mA, AO1: 0 mA … 20 mA
Dimensions (BxHxD)	73 mm x 178 mm x 55 mm
Weight	0.52 kg

Spare parts/Accessories

11

11.1 Basic Operation Panel

The BOP is a parameterization tool that is fitted directly to the SINAMICS G120 inverter via the option port. It can also be used for up and download of parameter sets. For a detailed description refer to chapter "Commissioning using the BOP".

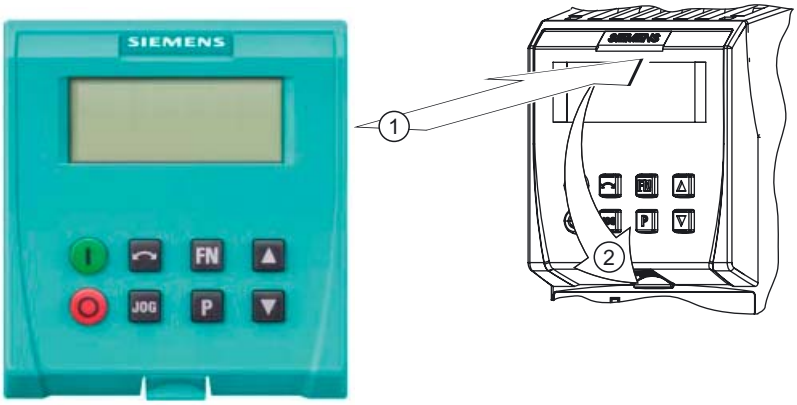

11.2 PC Connection Kit

PC Connection Kit

The PC connection kit consists of a PC inverter connector module with a 9-pin sub-D socket and a null modem cable allowing connection to a PC running STARTER software.

Using this equipment it is possible to provide the following operations:

- To parameterize the inverter (Commissioning, optimizing)
- To monitor the inverter (Diagnosis)
- To control the inverter (For the purpose of testing, STARTER has the priority to control)

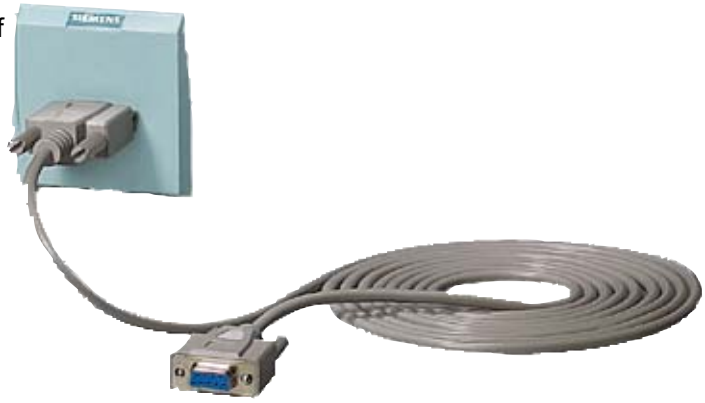

11.3 Micro Memory Card (MMC)

Micro Memory Card (MMC)

The MMC is used to save parameters from a Control Unit.

Thus saved parameter set can be transferred to another Control Unit. In the case of service, the drive system is immediately ready for use, e. g. after swapping an inverter.

The MMC stores up to 100 parameter sets and supports series commissioning without using additional commissioning tools as BOP or STARTER.

The commissioning of MMC depends on user settings (Parameter p8458)

Note

The inverter can be operated with or without MMC plugged in.

Appendix

A

A.1 Electromagnetic Compatibility

Electromagnetic compatibility

All manufacturers/assemblers of electrical apparatus which "performs a complete intrinsic function and is placed on the market as a single unit intended for the end user" must comply with the EMC directive EC/89/336.

There are three routes for the manufacturer/assembler to demonstrate compliance:

Self-certification

This is a manufacturer's declaration that the European standards applicable to the electrical environment for which the apparatus is intended have been met. Only standards that have been officially published in the Official Journal of the European Community can be cited in the manufacturer's declaration.

Technical construction file

A technical construction file can be prepared for the apparatus describing its EMC characteristics. This file must be approved by a ‘Competent Body’ appointed by the appropriate European government organization. This approach allows the use of standards that are still in preparation.

EMC Standards

The SINAMICS G120 drives have been tested in accordance with the EMC Product Standard EN 61800-3:2004.

A.2 Definition of the EMC Environment and Categories

Classification of EMC performance

The EMC environment and categories are defined within the EMC Product Standard EN 61800-3, as follows:

First Environment

An environment that includes domestic premises and establishments that are connected directly to a public low-voltage power supply network without the use of an intermediate transformer.

Note

For example: houses, apartments, commercial premises or offices in a residential building.

Second Environment

An environment that includes industrial premises and establishments that are not connected directly to a public low-voltage power supply network.

Note

For example: industrial and technical areas of buildings fed from a dedicated transformer.

Category C1

Power Drive System (PDS) of rated voltage less than 1000 V intended for use in the First (Domestic) Environment.

Category C2

Power Drive System (PDS) of rated voltage less than 1000 V, which is neither a plug in device nor a movable device, and when used in the First (Domestic) Environment, is only intended to be installed and commissioned by a professional.

Note

A professional is a person or an organization having necessary skills in installing and/or commissioning a Power Drive System (PDS), including their EMC aspects.

A.3 EMC Overall Performance

EMC Emissions

The SINAMICS G120 drives have been tested in accordance with the emission requirements of the category C2 (domestic) environment.

Table A- 1 Conducted & Radiated Emissions

EMC Phenomenon	Standard	Level
Conducted Emissions	EN 55011	Class A
Radiated Emissions	EN 55011	Class A

Note

To achieve this performance the default switching frequency should not be exceeded.

In order to achieve conducted emissions to EN 55011 Class B there is a range of PM240 external filter options available.

Achieving radiated emissions to EN 55011 Class B is largely dependent on the drive being correctly installed inside a metallic enclosure. The limits will not be met if the drive is not enclosed or installed in accordance with good EMC practices.

Harmonic Currents

The harmonic current emissions from the SINAMICS G120 drives is as follows:

Table A- 2 Harmonic Currents

Rating	Typical Harmonic Current (% of rated input current)							
	5th	7th	11th	13th	17th	19th	23rd	25th
FSA … FSF (400 V, 370 W … 110 kW)	73	52	25	23	22	15	12	10

Note

Units installed within the category C2 (domestic) environment require connection to the public low-voltage power supply network. Please contact your local supply network provider.

Units installed within the category C3 (industrial) environment do not require connection approval.

EMC Immunity

The SINAMICS G120 drives have been tested in accordance with the immunity requirements of category C3 (industrial) environment:

Table A- 3 EMC Immunity

EMC Phenomenon	Standard	Level	Performance Criterion
Electrostatic Discharge (ESD)	EN 61000-4-2	4 kV Contact discharge	A
		8 kV Air discharge	
Radio-frequency Electromagnetic Field	EN 61000-4-3	80 MHz … 1000 MHz 10 V/m	A
Amplitude modulated		80% AM at 1 kHz	
Fast Transient Bursts	EN 61000-4-4	2 kV @ 5 kHz	A
Surge Voltage	EN 61000-4-5	1 kV differential (L-L)	A
1.2/50 µs		2 kV common (L-E)	
Conducted	EN 61000-4-6	0.15 MHz … 80 MHz 10 V/rms	A
Radio-frequency Common Mode		80% AM at 1 kHz	
Mains Interruptions & Voltage Dips	EN 61000-4-11	100% dip for 3 ms	A
		30% dip for 10 ms	B
		60% dip for 100 ms	C
		95% dip for 5000 ms	D
Voltage Distortion	EN 61000-2-4 Class 3	10% THD	A
Voltage Unbalance	EN 61000-2-4 Class 3	3% Negative Phase Sequence	A
Frequency Variation	EN 61000-2-4 Class 3	Nominal 50 Hz or 60 Hz (± 4%)	A
Commutation Notches	EN 60146-1-1 Class B	Depth = 40%	A
		Area = 250% x degrees	

Note

The immunity requirements apply equally to both filtered and unfiltered units.

Standards

	European Low Voltage Directive The SINAMICS G120 product range complies with the requirements of the Low Voltage Directive 2006/95/EC. The units are certified for complaince with the following standards: EN 61800-5-1 — Semiconductor inverters –General requirements and line commutated inverters EN 60204-1 — Safety of machinery –Electrical equipment of machines
	European Machinery Directive The SINAMICS G120 inverter series does not fall under the scope of the Machinery Directive. However, the products have been fully evaluated for compliance with the essential Health & Safety requirements of the directive when used in a typical machine application. A Declaration of Incorporation is available on request.
	European EMC Directive When installed according to the recommendations described in this manual, the SINAMICS G120 fulfils all requirements of the EMC Directive as defined by the EMC Product Standard for Power Drive Systems EN 61800-3
	Underwriters Laboratories UL and CUL LISTED POWER CONVERSION EQUIPMENT for use in a pollution degree 2 environment.
SEMI F47	**Specification for Semiconductor Process Equipment Voltage Sag Immunity** The SINAMICS G120 Power Modules PM240 fulfil the requirements of the SEMI F47 standard.
	ISO 9001 Siemens plc operates a quality management system, which complies with the requirements of ISO 9001.

Certificates can be downloaded from the internet under the following link:
http://support.automation.siemens.com/WW/view/de/22339653/134200

A.4 Acceptance Log

A.4.1 Documentation of acceptance test

Overview

Acceptance test No.	
Date	
Person carrying-out	

Table A- 4 Machine description and overview/block diagram

Designation	
Type	
Serial No.	
Manufacturer	
End customer	
Block/overview diagram of the machine	

Table A- 5 Fail-safe functions for each drive

Drive No.	FW version	SI version	Fail-safe function
	r0018 =	r9770 =	
	r0018 =	r9770 =	
	r0018 =	r9770 =	
	r0018 =	r9770 =	
	r0018 =	r9770 =	
	r0018 =	r9770 =	
	r0018 =	r9770 =	
	r0018 =	r9770 =	
	r0018 =	r9770 =	
	r0018 =	r9770 =	
	r0018 =	r9770 =	
	r0018 =	r9770 =	
	r0018 =	r9770 =	
	r0018 =	r9770 =	
	r0018 =	r9770 =	
	r0018 =	r9770 =	
	r0018 =	r9770 =	
	r0018 =	r9770 =	
	r0018 =	r9770 =	
	r0018 =	r9770 =	
	r0018 =	r9770 =	
	r0018 =	r9770 =	
	r0018 =	r9770 =	
	r0018 =	r9770 =	
	r0018 =	r9770 =	
	r0018 =	r9770 =	
	r0018 =	r9770 =	
	r0018 =	r9770 =	
	r0018 =	r9770 =	
	r0018 =	r9770 =	
	r0018 =	r9770 =	
	r0018 =	r9770 =	

Table A- 6 Description of the fail-safe equipment/devices

Drive No.	Example: Wiring of the STO terminals (protective door, EMERGENCY STOP), grouping of the STO terminals, etc.

A.4.2 Function test of the acceptance test

Description

The function test must be carried-out separately for each individual drive (assuming that the machine permits this to be done).

Executing the test

First commissioning	Please mark	
Series commissioning		

Function test "Safe Torque Off" (STO)

This test comprises the following steps:

Table A- 7 "Safe Torque Off" function (STO)

No.	Description	Status
1.	Initial state • Drive is "Ready to Run" (P0010 = 0) • No safety faults and alarms • r9772.0 = r9772.1 = 0 (STO de-selected and inactive) • P9659 = time intervals for the forced checking procedure correctly set	
2.	Operate the drive	
3.	Check that the expected drive operates	
4.	Select STO while issuing the command to operate	
5.	Check the following: • The drive coasts-down • The drive is braked by the mechanical brake and held if a brake is being used • No safety faults • r9772.0 = r9772.1 = 1 (STO selected and active), r9772.14 = 1 if Safe Brake Control is enabled	
6.	De-select STO	
7.	Check the following: • No safety faults • r9772.0 = r9772.1 = 0 (STO de-selected and inactive) , r9772.14 = 0	
8.	Check that the expected drive operates if so the following is tested: • That the wiring between the control unit and power module is correct • Correct assignment, drive No. – inverter power module – motor • That the hardware is correctly functioning • That the shutdown paths have been correctly wired • Correct assignment of the STO terminals on the control unit • Correct parameterization of the STO function • Routine for the forced checking procedure of the shutdown paths	

Function test "Safe Stop 1" (SS1)

This test comprises the following steps:

Table A- 8 "Safe Stop 1" function (SS1)

No.	Description	Status
1.	Initial state • Drive is "Ready to Run" (P0010 = 0) • No safety faults and alarms • r9772.0 = r9772.1 = 0 (STO de-selected and inactive) • r9772.2 = r9772.3 = 0 (SS1 de-selected and inactive)	
2.	Operate the drive	
3.	Check that the expected drive operates	
4.	Select SS1 while issuing the traversing command	
5.	Check the following: • Drive speed decreases corresponding to the selected ramp time (if required, use a stop watch) • After the parameterized minimum speed has been fallen below, the drive coasts-down • The drive is braked and held by the mechanical brake if a brake is being used • No safety faults • r9772.1 = 1 (STO active) • r9772.2 = 1 (SS1 selected) • r9772.14 = 1 if safe brake monitoring is enabled	
6.	De-select SS1	
7.	Check the following: • No safety faults • r9772.1 = 0 (STO inactive) • r9772.2 = 0 (SS1 de-selected) • r9772.14 = 0	
8.	Check that the expected drive operates if so the following is tested: • The wiring between the control unit and power module is correct • Correct assignment, drive No. – inverter power module – motor • Correct functioning of the hardware • Correct wiring of the shutdown paths • Correct assignment, STO terminals on the control unit • Correct parameterization of the SS1 function	

Function test "Safely-Limited Speed" (SLS)

This test comprises the following steps:

Table A- 9 "Safely-Limited Speed" function (SLS)

No.	Description	Status
1.	Initial state • Drive is "Ready to Run" (P0010 = 0) • No safety faults and alarms • r9772.4 = r9772.5 = 0 (SLS de-selected and inactive)	
2.	Operate the drive (if the machine permits it, at a higher speed than the parameterized safely-limited speed)	
3.	Check that the expected drive operates	
4.	Select SLS while issuing the traversing command	
5.	Check the following: • r9772.4 = 1 (SLS selected) • Drive speed decreases corresponding to the selected ramp time or SLS mode (if required, use an oscilloscope) • After the parameterized safely-limited speed has been fallen below, the speed remains below this limit – In SLS mode 1 à correct, must be no fault – In SLS mode 0 à LSTO (safety fault at ramping end) – In SLS mode 2 à LSTO (immediately) • r9772.5 = 1 (SLS active)	
6.	De-select SLS	
7.	Check the following: • No safety faults • r9772.4 = r9772.5 = 0 (SLS de-selected and inactive)	
8.	Check that the expected drive operates if so the following is tested: • The wiring between the control unit and power module is correct • Correct assignment, drive No. – inverter power module – motor • Correct functioning of the hardware • Correct wiring of the shutdown paths • Correct parameterization of the SLS function	

A.4.3 Completing the acceptance log

Parameters of the fail-safe functions

	Specified value checked?	
	Yes	No
Control unit		

Checksums

Drive		Checksums	
Name	Drive No.	Control unit (r9798)	Control unit (r9898)

Data back-up/archiving

	Memory medium			Saved where
	Type	Designation	Date	
Parameters				
PLC program				
Circuit diagrams				

Signatures

Commissioning engineer

Confirms that the above listed tests and checks have been correctly carried-out.

Date	Name	Company/department	Signature

Machinery construction OEM

Confirms the correctness of the parameterization documented above.

Date	Name	Company/department	Signature

List of abbreviations

B

B.1 Abbreviations

Abbreviations

Table B- 1 Abbreviations

Abbreviations	State
A	
AC	Alternating Current
A/D	Analog digital converter
ADR	Address
AFM	Additional frequency modification
AG	Automation Unit
AI	Analog input
AK	Request Identifier
AO	Analog output
AOP	Advanced operation panel
ASIC	Application-specific integrated circuit
ASP	Analog setpoint
ASVM	Asymmetric space vector modulation
B	
BCC	Block check character
BCD	Binary-coded decimal code
BI	Binector input
BIA	Berufsgenossenschaftliches Institut für Arbeitssicherheit
BICO	Binector/connector
BO	Binector output
BOP	Basic Operator Panel
C	
C	Commissioning
CB	Communication board
CCW	Counter-clockwise
CDS	Command data set
CE	Communauté Européenne
CI	Connector input
CM	Configuration management
CMD	Command
CO	Connector output

Abbreviations	State
CO/BO	Connector output/Binector output
COM	Common (terminal is connected to NO or NC)
CT	Commissioning, ready to run
CU	Control Unit
CUT	Commissioning, run, ready to run
CW	Clockwise
D	
DAP	Device Access Point
D/A	Digital analog converter
DC	Direct current
DDS	Drive data set
DI	Digital input
DIP	DIP switch
DO	Digital output
DP	Distributed I/Os
DP-V1	Acyclic data transfer (extended PROFIBUS function)
DS	Drive state
E	
ECD	Equivalent circuit diagram
EEC	European Economic Community
EEPROM	Electrical erasable programmable read-only memory
ELCB	Earth leakage circuit breaker
EMC	Electromagnetic compatibility
EMF	Electromagnetic force
ES	Engineering System
FAQ	Frequently asked question
F	
Fast FFB	Fast freely programmable function blocks
FB	Function block
FCC	Flux current control
FCL	Fast current limiting
FF	Fixed frequency
FFB	Freely programmable function blocks
FOC	Field orientated control
FREQ	Frequency
FSA	Frame size A
FSB	Frame size B
FSC	Frame size C
FSD	Frame size D
FSE	Frame size E
FSF	Frame size F
FSG	Frame size G

Abbreviations	State
G	
GSD	Device Data File (Geräte Stamm Datei)
GSG	Getting Started Guide
GUI ID	Global unique identifier
H	
HIW	Main actual value
HMI	Human machine interface
HO	High Overload (Constant Torque)
HSW	Main setpoint
HTL	High-voltage transistor logic
I	
I/O	In-/output
IBN	Commissioning
IGBT	Insulated gate bipolar transistor
IND	Sub-index
J	
JOG	JOG
K	
KIB	Kinetic buffering
L	
LCD	Liquid crystal display
LED	Light emitting diode
LGE	Length
LO	Light Overload (Variable Torque)
LWL	Fiber Optic conductor
M	
MHB	Motor holding brake
MLP	Multi-Language Pack
MOP	Motor operated potentiometer
MMC	Micro Memory Card
N	
NC	Normally closed
NEMA	National Electrical Manufacturers Association
NO	Normally open
O	
OLM	Optical Link Module
OLP	Optical Link Plug
OM	Object Manager
OPI	Operating Instructions
P	
PAP	Parameter Access Point
PID	Proportional, integral, derivative controller

Abbreviations	State
PKE	Parameter ID
PKW	Parameter channel (Parameter/Kennung/Wert)
PLC	Programmable logic control
PM	Power module
PM-IF	Power module interface
PNU	Parameter Number
PNO	PROFIBUS Nutzerorganisation
PPO	Parameter process data object
PTC	Positive temperature coefficient
PWE	Parameter value
PWM	Pulse-width modulation
Pxxxx	Write parameter
PZD	Process data area (Prozeßdaten)
Q	
QC	Quick commissioning
R	
RAM	Random-access memory
RCCB	Residual current circuit breaker
RCD	Residual current device
RFG	Ramp-function generator
RFI	Radio frequency interference
ROM	Read-only memory
RPM	Revolutions per minute
rxxxx	read-only parameters of analogue signals
S	
SBC	Safe Break Control
SLVC	Sensorless vector control
SLS	Safe-Limited Speed
SOL	Serial option link
SS1	Safe Stop 1
STO	Safe Torque Off
STW	Control word
STX	Start of text
SVM	Space vector modulation
T	
TTL	Transistor-transistor logic
U	
USS	Universal serial interface
V	
V/f	Voltage/frequency
VC	Vector control
VT	Variable torque

Abbreviations	State
W	
WEA	Automatic restart
Z	
ZSW	Status word
ZUSW	Additional setpoint

Index

A

A&D Technical support, 201
- America (Johnson City), 201
- Asia/Pacific (Beijing), 202
- Europe/Africa (Erlangen), 201
- Online Service and support, 201

Acceptance test, 89
Accessories
- PC Connection Kit, 205

B

BOP, 50, 91, 98

C

Calculating the motor/control data, 64
Changing parameters with the Basic Operator Panel, 57
Classification of EMC performance, 208
Commissioning, 102
Commissioning functions, 17
Commissioning the application, 66
Common features, 17
Control functions, 18
Control Wiring, 32
Control word, 133
Conversion of extended PROFIBUS DP functionality, 138, 139
CU Swap, 118

D

Description, 37
Device-specific telegrams, 126
Download parameters, 91, 92

E

Electromagnetic compatibility, 207
EMC precautions, 40
EMC Standards, 207
European EMC Directive, 211
European Low Voltage Directive, 211
European Machinery Directive, 211

F

Factory setting
- Reset to, 77

Fitting the Control Unit to the Power Module, 29

I

Installation of PROFIBUS DP, 37
Installing a G120 GSD file, 150
ISO 9001, 211

M

Manufacturer-specific telegrams, 126
Maximum cable length, 37
MMC
- Manual download, 99
- Upload, 98, 114

Monitoring parameters, 109
Motor data identification, 63

O

Operating functions, 18

P

Parameter
- Attributes, 109
- Index, 109
- upload, 50

Parameter attribute
- Access level, 110
- Active, 112
- BICO, 110
- Can be changed, 111
- Data type, 111
- Grouping, 112
- Quick commissioning, 113
- Unit, 111
- Value range, 113

Parameter channel, 120
Parameters

Data sets, 113
PM Swap, 118
Power Modules
Fitting the Control Unit to the, 29
PROFIBUS DP
Conversion of extended functionality, 138, 139
Setting the address, 146
Switch over behavior, 130
PROFIBUS DP parameters, 147
PROFIBUS terminator, 39
PROFINET parameters, 165
PROFIsafe Parameters, 153
PROFIsafe telegram structure, 129
Properties of the DPV1 parameter channel, 139
Protective functions, 18

R

Reset to the factory setting, 77

S

Safety notes
Commissioning, 13
Dismantling and disposal, 14
General Warnings, Cautions and Notices, 12
Operation, 14
Repair, 14
Safety Instructions, 11
Transport and storage, 13
Self certification, 207
SIMATIC S7
BICO connection, 126
Installing a G120 GSD file, 150
Read parameters, 154, 171
SINAMICS G120 range, 15
Standard telegram structure, 126
Standard telegrams, 126
Standards, 211
STARTER
Download, 95
Upload, 95
Status display, 188
Status word, 133
Switch over behavior, 130

T

Technical construction file, 207
Telegrams, 126
TTL Encoder, 102

U

Underwriters Laboratories, 211
Universal Serial Interface, 173
Upload parameter, 50, 96
Upload parameters, 91
Used telegram types, 126
USS, 173

V

VIK/NAMUR telegram structure, 128

Siemens AG
Industry Sector
Postfach 48 48
90026 NÜRNBERG
DEUTSCHLAND

Änderungen vorbehalten
© Siemens AG 2008

www.siemens.com/automation