SIEMENS

SINAMICS G180

Compact inverter units, cabinet systems,
air-cooled and liquid-cooled cabinet units

Installation and operating instructions

Edition 05/2013

Answers for industry.

SIEMENS

Installation and operating instructions Sinamics G180

Operating Instructions

Introduction 1

Safety information 2

Description 3

Preparations for use 4

Installation 5

Electrical connection 6

Commissioning 7

Operation 8

Maintenance 9

Spare parts and accessories 10

Diagnostics, faults and warnings 11

Service & Support A

Quality documents B

Technical data C

List of abbreviations D

05/2013

4BS0751-001

Legal information

Warning notice system

This manual contains notices you have to observe in order to ensure your personal safety, as well as to prevent damage to property. The notices referring to your personal safety are highlighted in the manual by a safety alert symbol, notices referring only to property damage have no safety alert symbol. These notices shown below are graded according to the degree of danger.

⚠ DANGER
indicates that death or severe personal injury **will** result if proper precautions are not taken.

⚠ WARNING
indicates that death or severe personal injury **may** result if proper precautions are not taken.

⚠ CAUTION
indicates that minor personal injury can result if proper precautions are not taken.

NOTICE
indicates that property damage can result if proper precautions are not taken.

If more than one degree of danger is present, the warning notice representing the highest degree of danger will be used. A notice warning of injury to persons with a safety alert symbol may also include a warning relating to property damage.

Qualified Personnel

The product/system described in this documentation may be operated only by **personnel qualified** for the specific task in accordance with the relevant documentation, in particular its warning notices and safety instructions. Qualified personnel are those who, based on their training and experience, are capable of identifying risks and avoiding potential hazards when working with these products/systems.

Proper use of Siemens products

Note the following:

⚠ WARNING
Siemens products may only be used for the applications described in the catalog and in the relevant technical documentation. If products and components from other manufacturers are used, these must be recommended or approved by Siemens. Proper transport, storage, installation, assembly, commissioning, operation and maintenance are required to ensure that the products operate safely and without any problems. The permissible ambient conditions must be complied with. The information in the relevant documentation must be observed.

Trademarks

All names identified by ® are registered trademarks of Siemens AG. The remaining trademarks in this publication may be trademarks whose use by third parties for their own purposes could violate the rights of the owner.

Disclaimer of Liability

We have reviewed the contents of this publication to ensure consistency with the hardware and software described. Since variance cannot be precluded entirely, we cannot guarantee full consistency. However, the information in this publication is reviewed regularly and any necessary corrections are included in subsequent editions.

Siemens AG
Industry Sector
Postfach 48 48
90026 NÜRNBERG
GERMANY

Order number: 4BS0751
Ⓟ 06/2013 Technical data subject to change

Copyright © Siemens AG 2013.
All rights reserved

Table of contents

1 Introduction....9
1.1 About these instructions....9
1.2 Text format features....9
1.3 Presentation of the display buttons in the operating instructions....10
1.4 Specific features....10
2 Safety information....13
2.1 The five safety rules....13
2.2 Use of tested, certified and Siemens-approved components....14
2.3 Areas that are potentially and particularly hazardous....14
2.4 Notes for operator protection....16
2.5 Notes on water cooling:....19
2.6 Safety precautions when handling anti-freeze....20
2.7 Standards and guidelines for proper use of inverters....21
2.8 Plant safety....22
2.9 Components that can be destroyed by electrostatic discharge (ESD)....23
2.10 Electromagnetic fields....24
2.11 Radio telephones and mobile telephones....25
2.12 Note regarding fiber-optic cables....26
2.13 Provide fuse protection for external control voltage....26
3 Description....27
3.1 Updating inverter software or instructions....27
3.2 Order numbers / Type designations....27
4 Preparations for use....33
4.1 Transporting inverter....33
4.2 Storage of the inverters....36
4.3 EMC....37
4.3.1 Install and connect in accordance with EMC....37
4.3.2 Examples for correct EMC connection....38
4.3.3 Radio interference class....40
4.3.4 EMC environment category....41
4.4 Realizing operation in the explosion-protected zone....42

5 Installation....45
5.1 Installing inverter - General notes....45
5.2 Installing compact devices....46
5.3 Protective cover IP21 for compact and compact Plus devices....46
5.4 Installing cabinet units....47
5.5 Installing external display....48
6 Electrical connection....51
6.1 General information about the electrical connection....51
6.2 Protecting the inverter....51
6.3 Circuit breaker....52
6.4 Connecting control cable....52
6.5 Line supply connection....53
6.5.1 Suitable supply line configurations....53
6.5.2 Dimensioning mains power cables....53
6.5.3 Connecting mains power cable to the inverter....54
6.5.4 Inverter connection for different pulse operation....55
6.5.5 Adjusting the line voltage at the inverter....56
6.6 Motor connection....57
6.6.1 Motor selection....57
6.6.2 Coil load....58
6.6.3 Motor voltage and type of circuit....58
6.6.4 Dimensioning motor cables....58
6.6.5 Dimensioning maximum motor cable length....59
6.6.6 Connecting motor cable....60
6.6.7 Connecting the PTC thermistor of the motor to the inverter....61
6.7 Connection of external control voltage....61
6.7.1 Provide fuse protection for external control voltage....61
6.7.2 Use of external control voltage....61
6.7.3 Adapting the hardware to external control voltage....62
6.7.4 Preparations for accessing the "switching power supply" board....62
6.7.4.1 Preparing compact devices with size up to 165 mm....62
6.7.4.2 Preparing compact devices with size up to 225 mm....63
6.7.4.3 Preparing compact devices with frame size K4 with 400 V or 500 V....63
6.7.4.4 Providing compact devices with the frame size K4 with 690 V....64
6.7.4.5 Providing compact devices with frame size K5/51 with 400 V or 500 V....65
6.7.4.6 Providing compact devices with the frame size K5/51 with 690 V....66
6.7.4.7 Preparing compact devices with frame size K6 with 400 V or 500 V....67
6.7.4.8 Providing compact devices with the frame size K6 with 690 V....67
6.7.5 Connecting external control voltage for compact devices....68
6.7.6 Control voltage 230 V for cabinet units....69
7 Commissioning....71
7.1 Checks without mains power supply and without motor....71
7.2 Checks with mains power supply and without motor....73

7.3 Checks with mains power supply and with motor....77
7.4 Checking with motor coupled to the work machine....78

8 Operation....79

8.1 Operation....79
8.1.1 Function of the inverter display....79
8.1.2 Switching the unit on and off....80
8.1.3 Setting the language....81
8.1.4 Setting the date and time....81
8.1.5 Setting the level of detail of the inverter menu....81
8.1.6 Inverter operating commands....81
8.1.7 Configuring operating sources....83
8.1.8 Invoking mode configurations....83
8.1.9 Communication Options....84
8.1.10 Meaning of the abbreviations for operating functions....85
8.1.11 Function of "P-Profibus/Modbus"....85
8.1.12 Function of "P-DIGITAL OUTPUTS"....85
8.1.13 Function of "P-ANALOG OUTPUTS"....86
8.1.14 Operation of several inverters on one PC....86

8.2 Standard mode settings....87
8.2.1 Mode "std siss"....87
8.2.2 Mode "std sisd"....88
8.2.3 Mode "std dids"....89
8.2.4 Mode "std didd"....90

8.3 NAMUR mode settings....90
8.3.1 Operation according to NAMUR defaults....90
8.3.2 Operation according to "NAMUR 1"....91
8.3.3 Operation according to "NAMUR 2"....92
8.3.4 Operation according to "NAMUR 3"....93
8.3.5 Operation according to "NAMUR 4"....94
8.3.6 Operation according to "NAMUR 5"....95
8.3.7 Operation according to "NAMUR 6"....96

8.4 Controlling the external connections of the inverter....97
8.4.1 Function of the control cable terminals....97
8.4.2 Protective separation according to EN 61800-5-1....97
8.4.3 Sub-D and USB connections and DIL switches....100
8.4.4 USB interface....100
8.4.5 DIL switches "S1" and "S2"....101
8.4.6 Connecting encoders....103
8.4.7 Connect the PC via USB at -X50B....105
8.4.8 Connecting a PC to -X51 via RS 232....106
8.4.9 Connection for optional external display with RS 485....107

8.5 Special functions....108
8.5.1 Protective functions....108
8.5.2 Multiple function of the analog and digital inputs....112

8.6 Setpoint channel and closed-loop control....116
8.6.1 Specifying source for speed setpoint....116

8.7 Parameterization....116

8.7.1 Principle of operation of the configuration....116
8.7.2 Protecting parameters against modification....118
8.7.3 Configuration using the inverter display....118
8.7.4 More documentation about parameterization....118

8.8 Examples / Applications....119
8.8.1 "Standard" application....119
8.8.1.1 Standard control cable terminals....119
8.8.1.2 Control cable terminals "peripheral board 1"....120
8.8.1.3 Control cable terminals "peripheral board 2"....120
8.8.1.4 Control cable terminals "peripheral board 3"....121
8.8.1.5 Control cable terminals "peripheral board 4"....122
8.8.1.6 Mode setting of the "Standard" application....122
8.8.1.7 Assignment of the digital inputs....123
8.8.1.8 Assignment of the digital outputs....123
8.8.1.9 Assignment of the analog inputs....123
8.8.1.10 Assignment of the analog outputs....124
8.8.1.11 Input "Safe halt" / PTC thermistor inputs on peripheral board....124
8.8.2 "NAMUR" application....125
8.8.2.1 Control cable terminals for "NAMUR" application....125
8.8.2.2 Control cable terminals "peripheral board 4"....126
8.8.2.3 Mode setting of the NAMUR application....127
8.8.2.4 Assignment of the relay outputs....128
8.8.2.5 Assignment of the analog inputs....128
8.8.2.6 Assignment of the analog outputs....129
8.8.2.7 Input "Mandatory mains power isolation" / PTC thermistor inputs on peripheral board....129

9 Maintenance....131

9.1 Maintenance and servicing....131

9.2 Replacing compact device....132

9.3 Replacing fans for the compact device....133

9.4 Maintenance and service of water cooling (option)....133

9.5 Decommissioning....133

10 Spare parts and accessories....135

10.1 Use of tested, certified and Siemens-approved components....135

10.2 Peripheral boards 1 to 4....136
10.2.1 General information about the peripheral boards 1 to 4....136
10.2.2 Electronic shutdown for "Safe halt" / PTC inputs....137
10.2.2.1 Standards for electronic shutdown....137
10.2.2.2 General information about electronic shutdown....137
10.2.2.3 Motor temperature monitoring shutdown concept....137
10.2.2.4 Risk comparison....138
10.2.3 "Safe halt"....139
10.2.3.1 Checking the "Safe halt" function....140
10.2.3.2 "Safe halt" in the DC link version....140
10.2.4 PTC inputs for motor PTC thermistor....141
10.2.4.1 Checking the PTC thermistor shutdown function....141

10.3 Brake transistor and brake resistor....142
10.3.1 Dimensioning the brake resistor....143

10.3.2 Connecting the brake resistor....143
10.4 Parameter overview....143
10.5 "Factory settings" application....143
10.6 Protective cover IP21 for compact and compact Plus devices....144
10.7 Main switch "Q 2T..." or "W 2T...."....144
10.8 DC link terminals for compact devices....145
10.9 External display....147
10.10 RFI suppression filter, category C1 (class B)....147
10.11 Strengthened du/dt filter....148
10.12 Sine-wave filter....148
10.13 Additional mains power protection chokes....148
10.14 Profibus DP....148
10.15 Modbus RTU....150
10.16 Modbus TCP....152
10.17 Water cooling....154
10.17.1 General information about water cooling....154
10.17.2 Direct water cooling diagram....155
10.17.3 Connecting water cooling....156
10.17.4 Venting the water cooling....156
10.17.5 Decommissioning and shutdown....157
10.17.6 Cooling water additives for the closed inverter cooling with cooling unit (optional)....157
11 Diagnostics, faults and warnings....159
11.1 Reading event log....159
A Service & Support....161
A.1 Siemens Industry Online Support....161
A.2 Contacts in Ruhstorf an der Rott location (Germany)....162
B Quality documents....163
C Technical data....169
C.1 Technical data for transportation....169
C.2 Technical data for storage....170
C.3 Frame sizes of compact units....171
C.4 Frame sizes of cabinet units....173
C.5 Technical data for operation....175
C.6 Tightening torques for power cables....176
C.7 Technical data of the control cable terminals....176
C.8 Technical data and identification of the PTC thermistor input at peripheral boards 2 and 4.....177
C.9 Technical data of the direct water cooling....178

C.10 Permissible substance values for the cooling water....180
C.11 Threshold values for fan control system....180
C.12 Derating....181
C.12.1 Current derating....181
C.12.2 Voltage derating....183
D List of abbreviations....185
Index....187

Introduction 1

1.1 About these instructions

These instructions describe the converter and explain how to handle it, from initial delivery to final disposal of the equipment. Keep these instructions for later use.

Read these instructions before you handle the converter and follow the instructions. The instructions contain information about the safe handling of the converter as well as its components and modules. They provide information on assembling, installing, and maintaining the equipment properly.

If you have suggestions for improving the document, please contact our Service Center.

1.2 Text format features

Text format features

The warning notice system is explained on the rear of the inside front. Always follow the safety instructions and notices in these instructions.

In addition to the safety-related warning notices which you must read, you will find the text in these instructions is formatted in the following way:

1. Handling instructions are always formatted as a numbered list. Always perform the steps in the order given.

- Lists are formatted as bulleted lists.
  - Lists on the second level are hyphenated.

Note

A Note is an important item of information about the product, handling of the product or the relevant section of the document. Notes provide you with help or further suggestions/ideas.

1.3 Presentation of the display buttons in the operating instructions

Table 1-1 Presentation of the display buttons in the text

Button on the inverter display	Presentation in the text
I	<On>
O	<Off>
P	<P>
S	<S>
I	<I>
↵	<ENTER>
▲	<up arrow>
▼	<down arrow>

1.4 Specific features

The following text formats are used in this operating manual.

Display buttons

Table 1-2 Presentation of specific features

Description in the text	Meaning
<up arrow>	Press the button on the control panel once.
<arrow up_arrow up>	Press the button on the control panel twice.
<S+I>	Press both buttons simultaneously.

Display text

"P-SYSTEM_DATA"

Text shown in the control panel display is presented like this.

If you have to branch in a menu, the text will be shown as follows: "P-EXTRAS/Language". Thereby "P-EXTRAS" symbolizes the main menu and "Language" the submenu. In this case, you are configuring the language in the "P-EXTRAS" menu. The display shows "P-EXTRAS" at the beginning. If you change to this menu, the display only shows "Language"

Safety information 2

2.1 The five safety rules

For your personal safety and in order to prevent material damage it is essential that you adhere to all the safety notices contained in your product documentation. Pay particular attention to the safety notices on the product itself. When working on the equipment, always observe the following five safety rules as defined by EN 50110-1 "Working in a voltage-free state". Apply the five safety rules in the sequence stated before starting work.

Five safety rules

1. Disconnect the system.
   Disconnect the auxiliary circuits, for example anti-condensation heating.
   Wait until the capacitors have discharged.
2. Lockout to protect against reconnection.
3. Make sure that the equipment is de-energized and in a no-voltage condition.
4. Ground and short-circuit.
5. Cover or enclose adjacent components that are still live.

When you have finished working on the equipment, apply the measures in reverse order.

DANGER

High voltages

Potentially fatal voltages occur when this equipment is in operation which can remain present even after the inverter is switched off.

High voltages cause death, serious injury or material damage if the safety instructions are not observed or if the equipment is handled improperly.

- Ensure that only qualified and authorized personnel perform work on the inverter.
- Always observe the five safety rules specified above whenever you are carrying out any work on the device.

2.2 Use of tested, certified and Siemens-approved components

Observe the following instructions if you would like to integrate your own components in the system.

WARNING

Components which are not approved

It is dangerous to use components which are not tested, not certified and not approved by Siemens. This can result in death, serious injury or material damage.

Use only components which are tested, certified and approved by Siemens.

2.3 Areas that are potentially and particularly hazardous

Certain areas in the inverter can represent a hazard during operation. The diagram highlights these areas that represent a potential hazard.

Observe the following safety notices and comply with all rules and instructions.

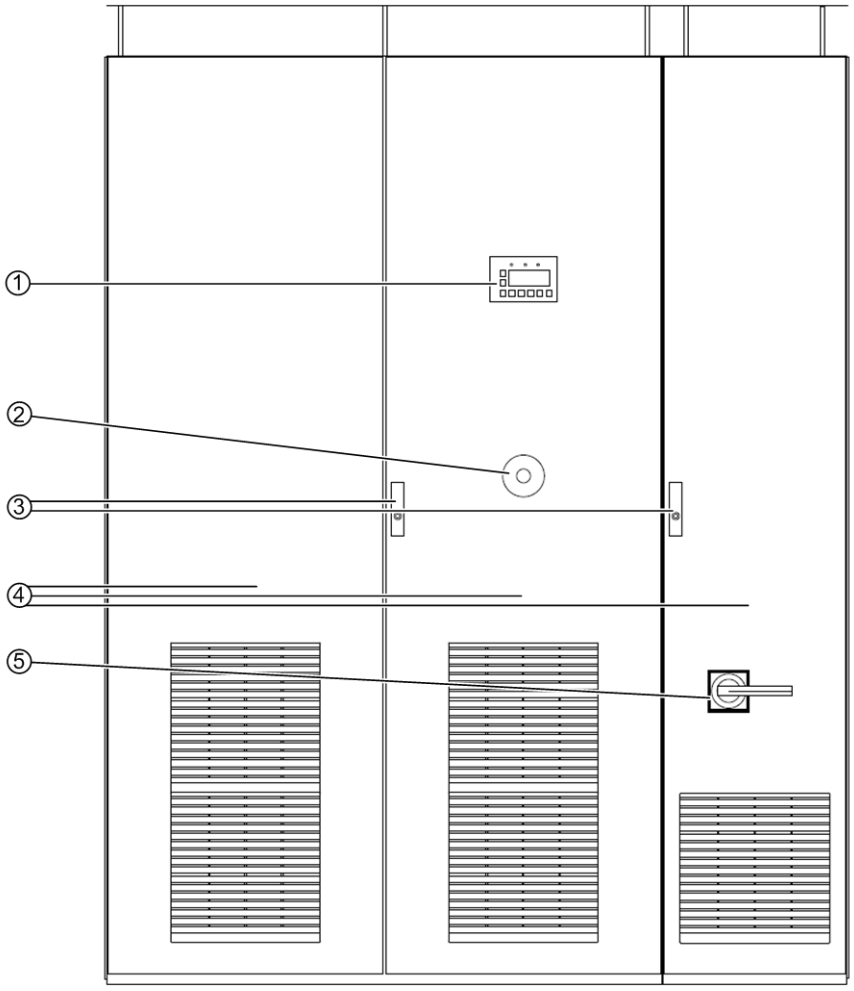

① Stopping the inverter via the display or by means of external control devices does not disconnect the inverter from the line voltage.

② When you press the Emergency Off button, this does not mean that the inverter is voltage-free immediately.

③ Danger due to hazardous voltages when the cabinet doors are open.

④ These voltages can remain due to self-excitation if the connection to the motor is not removed. Some surfaces in the inverter are hot during operation and for some time afterwards. Fans in the inverter can continue to rotate after the unit has been switched off.

⑤ Hazardous voltages can persist in the DC link (with current-source DC link inverters: in the commutation capacitors) or from external or auxiliary power sources after the inverter has been disconnected from the line voltage.

Depending on parameter settings and connection of external control devices, the inverter can start up automatically when the line voltage is connected.

Figure 2-1 Areas that are potentially and particularly hazardous

WARNING

Live components

During operation and shortly after the system has been switched off with the Emergency Off button, high voltages are still present in the inverter and its components. These voltages may remain if the connection to the motor is not removed or grounded. This danger exists with permanent-magnet synchronous motors and synchronous motors which are not de-excited immediately. These voltages may remain if the connection to the motor is not removed or grounded. High voltages cause death or serious injury if the safety instructions are not observed or if the equipment is handled improperly.

Never open the covers or doors when the system is in operation or while the DC link capacitors are still discharging (in the case of current-source DC link inverters: commutation capacitors). The DC link capacitors (commutation capacitors) can take up to 10 minutes to discharge (or 5 minutes with compact devices) after the Emergency Off button is actuated.

WARNING

Automatic startup

Depending on parameter settings and connection of external control devices, the inverter can start up automatically when the line voltage is connected. This can result in death, serious injury or material damage.

Confirm whether or not your system is capable of automatic starting and, if appropriate, take measures to ensure personal safety and operational readiness at the driven machine.

2.4 Notes for operator protection

Read the following information about personal protection.

The unit meets the safety requirements as defined by IEC EN 61800-5-1 and UL 508 C.

Specialist personnel

Ensure that any transport, installation, operation or maintenance work is carried out by **qualified, trained staff.** The minimum qualification must be that of an electrician in accordance with EN 50110 "Operation of electrical systems".

For the purpose of these basic safety instructions, "skilled technical personnel" means people who are familiar with the installation, mounting, commissioning and operation of the product. They must be properly qualified for the tasks with which they are charged. Qualified personnel must also be thoroughly familiar with all the safety-related instructions and measures described in the product documentation.

Safety-relevant information for working on the inverter

DANGER

Live, moving or rotating parts

Inverters have live, moving or rotating parts.

Death or serious injury can result if any essential covers are removed without authorization or in the case of improper use or incorrect installation or operation.

Always take all the necessary precautions before working on the device.

DANGER

High voltages

High voltages cause death or serious injury if the safety instructions are not observed or if the equipment is handled improperly.

Voltages of more than 50 V are present when this unit is operational. These voltages may remain for some time after switching off or as long as the motor is turning over.

Make sure that work is only carried out by qualified personnel under due observance of the five safety rules, the information in these operating instructions, and the instructions on the product itself.

DANGER

Auxiliary and external supply systems

Hazardous voltages (e.g. control voltage, signal voltage, supply voltage for heaters and fans) can persist even after the inverter has been switched off. Contact with live parts can result in death or serious injury.

Make sure that work is only carried out by qualified personnel under due observance of the five safety rules, the information in these operating instructions, and the instructions on the product itself.

DANGER

Electric shock

If you carry out servicing work on the inverter without safely disconnecting the power supply, serious injury or death due to electric shock can occur. The PTC input is not an Emergency Off input which safely disconnects the inverter or the motor from the line supply.

Safely and reliably disconnect the power supply before opening covers or terminal boxes at the inverter. For example, use a main switch.

DANGER

High voltages

Electrical accidents including electric shock occur when general safety instructions for working on the device are not observed. Death, serious injury or material damage will result.

Please note the following information for your safety:

- Always observe the five safety rules whenever you are carrying out any work on the device.
- Always disconnect the equipment before working on it.
- Leave the covers in place during normal operation and keep the cabinet doors closed.
- Do not use any instrumentation if you know it is defective or damaged.
- Secure the main circuit breaker in the OFF position so that it cannot be reconnected, for example by removing the switch unit when working on a connected motor or the feeder cable to the motor.
- Ground the inverter cabinet and chassis units properly to ensure that no accessible parts of the equipment are energized or connected in any way to a dangerous voltage source.
- Use an earthing spider for grounding purposes. Read the information provided in the section "Safety instructions regarding maintenance and repairs" in "Maintenance and servicing" in your operating instructions.
- Wear personnel protective gear such as goggles, ear protection and helmet to protect yourself against injury.
- Always follow the national regulations and local specifications when working on the equipment.

DANGER

DC link capacitor discharge time

After the mains power has been switched off, high voltages still persist in the DC link capacitors.
These cause death or serious injury if the safety instructions are not observed or if the equipment is handled incorrectly.

The DC link capacitors require up to 10 minutes (5 minutes for compact units) before they are discharged to a safe value (< 60 V).

After you have switched off the main power supply, do not touch the device or carry out any maintenance work or repair work until the discharge time of 10 minutes (5 minutes for compact devices) have elapsed.
Measure the voltage once the discharge time has elapsed.

CAUTION

Hot surfaces

Certain components (e.g. the heat sink or filter reactor) can become very hot during operation. These components can remain hot for a long time after operation.

The anti-condensation heating (optional) is switched on when the inverter is not operating and the limit value set for the temperature control is reached. Once activated, the anti-condensation heating can generate a great deal of heat.

Contact with hot surfaces can cause injuries (such as burns to the skin).

Never touch hot components just after you have switched off the inverter. Always take the appropriate precautions before touching any components.

2.5 Notes on water cooling:

Follow the safety instructions for water-cooled inverters.

WARNING

Electric shock as a result of defective cooling water system

Short circuits can develop in electrical installations when water escapes from cooling circuits. This can result in death, serious injury or material damage.

- Note the technical data of the water cooling system. You will find this data in section "Technical data of direct water cooling system" (Page 178), the technical data sheet and the CD supplied with the product.
- Note the information in section "Permissible substance values for the cooling water" (Page 180).
- Note the information in section "Water cooling" (Page 154).
- Protect the cooling water circuits against excess pressure, e.g. by installing a relief valve.
- Make sure that the pipework installation and pressure testing procedures comply with local safety regulations and national safety guidelines.

2.6 Safety precautions when handling anti-freeze

CAUTION

Physical injury caused by burns or poisoning is possible

Antifreeze is harmful to health. Inhalation or swallowing can lead to burns or poisoning.

Observe the following health and safety precautions when handling antifreeze:

- Do not inhale vapors.
- Keep the antifreeze away from food and beverages.
- Wear protective gloves and safety goggles.
- Avoid contact with skin and eyes.

NOTICE

Leaking antifreeze has a corrosive effect and may cause short-circuits.

When a connection is disconnected in the cooling circuit, antifreeze can escape and drip down onto lower areas. These areas can corrode and therefore cause short-circuits.

Whenever you disconnect a connection in the cooling circuit, cover lower areas. Thoroughly remove antifreeze from areas that it has come into contact with and clean. Completely remove all residues.

NOTICE

Impurities in the cooling circuit can cause converter modules to fail

When carrying out any work on the cooling circuit, ensure that no impurities (e.g. dust, sand, fluff, chips, etc.) are able to enter the cooling circuit. Make sure that all containers and hoses, with which you handle the antifreeze are clean and are exclusively used for the antifreeze.

First aid measures

The following table lists the first aid measures:

Table 2-1 Antifreeze: First aid measures

Event	Measure
Wetted clothing	Remove clothing immediately.
Skin contact	Wash off immediately with plenty of water.
Eye contact	Rinse thoroughly and immediately with plenty of water and seek medical advice.
If swallowed	If the affected person is completely conscious, immediately induce vomiting. **In any case, consult a doctor**.

In addition, observe the provisions of the EC safety data sheet in accordance with 91/155/EEC, as well as the generally applicable first aid rules.

2.7 Standards and guidelines for proper use of inverters

Inverters are components which are intended for installation in electrical systems or machines.

Commissioning of the inverters is prohibited until one of the following two conditions is verifiably fulfilled.

- The machine complies with the requirements of the following directives:
  - Machinery directive 2006/42/EG
  - EMC directive 2004/108/EG
- The electrical installation complies with the requirements of the following directives:
  - Low-voltage directive 2006/95/EG
  - EMC directive 2004/108/EG

The inverters comply with the requirements of the low-voltage directive 2006/95/EG and the EMC directive 2004/108/EG.

To ensure that this equipment functions perfectly and safely, observe the following:

- Transportation in accordance with proper procedures
- Proper storage
- Proper installation and assembly
- Careful operation
- Careful maintenance

The unit must only be used for the applications specified in the catalog and only in conjunction with devices and components recommended and approved by Siemens.

Note

Familiarize yourself with the local safety requirements and national safety guidelines and always observe them.

2.8 Plant safety

Read the following information about safeguarding the equipment.

DANGER

Unsecured installation site

This inverter is intended for use in industrial power installations and machines.
Accidents can occur if the equipment is not used for the intended purpose, is incorrectly operated, is inadequately maintained or can be accessed by unauthorized persons. Death, serious injury or material damage will result.

Secure the installation site against unauthorized access when using the inverter outside industrial areas using suitable equipment (e.g. safety fences) and corresponding signage. Install the inverter in a suitable area to which only properly trained personnel have access.

Procedure

You are responsible for the safety of the system.
You must ensure that the following requirements are fulfilled:

- Basic planning and all the work involved in transporting, assembling, installing, commissioning, maintaining and repairing the equipment is only carried out by qualified personnel or personnel supervised by responsible skilled technicians.
- The operating instructions and the complete product documentation are always available when carrying out any work.
- The technical data and specifications regarding the permissible installation, connection, environmental, and operating conditions are observed consistently.
- The system-specific installation and safety regulations are observed and measures are taken to ensure personal safety.
- It is prohibited for unqualified persons to work on these devices or in their vicinity.

The product documentation, especially the operating instructions, and the notices on the unit itself therefore contain only the information required by qualified personnel to use the installations or machines for their intended purpose.

Note

Siemens Service Centers

The services and support provided by the Siemens service centers are recommended for planning, installation, commissioning, and servicing work.

Note

Engineering information

Systems in which the inverters are installed must be fitted with additional monitoring and safety devices in order to comply with safety requirements (e.g. equipment and product safety law, accident prevention regulations).

2.9 Components that can be destroyed by electrostatic discharge (ESD)

ESD guidelines

NOTICE
Electrostatic discharge Electronic components can be destroyed in the event of improper handling, transporting, storage, and shipping. Pack the electronic components in appropriate ESD packaging; e.g. ESD foam, ESD packaging bags and ESD transport containers. To protect your equipment against damage, follow the instructions given below.

- Avoid physical contact with electronic components. If you need to perform absolutely essential work on these components, then you must wear one of the following protective gear:
  - Grounded ESD wrist strap
  - ESD shoes or ESD shoe grounding strips if there is also an ESD floor.
- Do not place electronic components close to data terminals, monitors or televisions. Maintain a minimum clearance to the screen (> 10 cm).
- Electronic components should not be brought into contact with electrically insulating materials such as plastic foil, plastic parts, insulating table supports or clothing made of synthetic fibers.
- Place components in contact with ESD-suited materials e.g. ESD tables, ESDS surfaces, ESD packaging.
- Measure on the components only if one of the following conditions is met:
  - The measuring device is grounded with a protective conductor, for example.
  - The measuring head of a floating measuring device has been discharged directly before the measurement.

  The necessary ESD protective measures for the entire working range for electrostatically sensitive devices are illustrated once again in the following drawings.
  Precise instructions for ESD protective measures are specified in the standard DIN EN 61340-5-1.

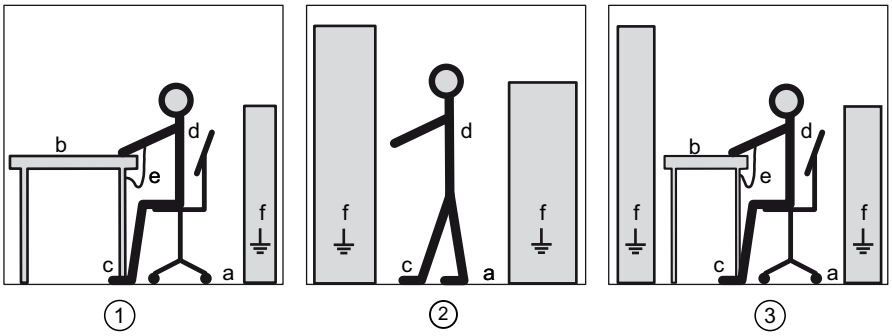

①	Sitting
②	Standing
③	Standing/sitting
a	conductive floor surface, only effective in conjunction with ESD shoes or ESD shoe grounding strips
b	ESD furniture
c	ESD shoes or ESD shoe grounding strips are only effective in conjunction with conductive flooring
d	ESD clothing
e	ESD wrist strap
f	cabinet ground connection

Figure 2-2 ESD protective measures

2.10 Electromagnetic fields

WARNING

Electromagnetic fields "electro smog"

Electromagnetic fields are produced during operation of electrical energy technology systems, e.g. transformers, inverters, motors etc.

Electromagnetic fields can interfere with electronic devices, which could cause them to malfunction. For example, the operation of heart pacemakers can be impaired, potentially leading to damage to a person's health or even death. It is therefore forbidden for persons with heart pacemakers to enter these areas.

The plant operator is responsible for taking appropriate measures (labels and hazard warnings) to adequately protect operating personnel and others against any possible risk.

- Observe the relevant nationally applicable health and safety regulations. In Germany, "electromagnetic fields" are subject to regulations BGV B11 and BGR B11 stipulated by the German statutory industrial accident insurance institution.
- Display adequate hazard warning notices.

- Place barriers around hazardous areas.
- Take measures, e.g. using shields, to reduce electromagnetic fields at their source.
- Make sure that personnel are wearing the appropriate protective gear.

2.11 Radio telephones and mobile telephones

Safety instructions

CAUTION

Radio telephones

If you use radio communication equipment > 2 W in close proximity to the inverter, damage to equipment of the type specified below can occur and possibly result in physical injuries to personnel:

- Erroneous pulses can be produced during operation of the inverter .
- Power units can develop malfunctions.
- The inverter can shut down.
- Contactors can chatter.
- Interference on binary outputs.

Do not use radio telephones > 2 W in close proximity to the inverter equipment.

Radio telephones with lower outputs must not be used at a distance of less than 1 m from the inverter.

CAUTION

Mobile telephones

The use of mobile telephones near the inverter when it is in operation can result in the generation of erroneous pulses and possibly give rise to physical injuries to personnel.

Switch off mobile telephones when you are near the equipment.

2.12 Note regarding fiber-optic cables

Fiber-optic cable systems are deployed in some inverters. Please observe the following warning.

Figure 2-3 Photography prohibited

CAUTION

Erroneous pulses in fiber-optic cables

Erroneous pulses in the fiber-optic cables caused by camera flash lights can result in malfunction and damage to the inverter and motor and potentially result in physical injury to personnel.

Inverters with fiber-optic cable systems must not be photographed using a flash light when they are in operation! Only photograph these types of inverters when they are in a no-voltage state.

2.13 Provide fuse protection for external control voltage

WARNING

External control voltage without fuse protection

If you connect an external control voltage without providing suitable fuse protection, overloading and short circuits can occur. This can result in death, serious injury or material damage.

The device may only be operated with a protected external control voltage. Note the following recommendation.

Install one of the following options to protect the external control voltage:

- Miniature fuse in accordance with EN 60127: 2 A … 6 A, slow, maximum 150 VA
- Miniature circuit-breaker: 2 A … 6 A, characteristic D, maximum 150 VA

Description 3

3.1 Updating inverter software or instructions

These operating instructions are valid for SINAMICS G180, software version 00235-R16 and higher.

Procedure

1. Check the current software version on the inverter display in the menu "I-INVERTER DATA/ Version".
2. If the inverter software version is higher than the version of the operating manual, download the current version of the manual from this website (http://www.siemens.com).
3. If the inverter software is no longer current, then update the inverter software by using the software "IMS".

Contact the Service Center of Siemens in Ruhstorf (Page 162) for more detailed information.

3.2 Order numbers / Type designations

The inverters have the following types of identification:

- Order number
- Short designation
- Type code
- Other version designation

Order number

e.g. 6SE0100-1AG31-0AA7

The meaning of the icons is as follows:

Example	Designation	Option	Meaning
6SE01	1. - 5. position: device type, product group	6SE01	Sinamics G180
0	6. position: Mechanical design	0	Compact device with air cooling
		4	Cabinet with compact units
		7	Cabinet unit with water cooling
		8	Cabinet unit with air cooling
0	7. position: Unassigned	0	All Sinamics G180 industrial inverters
-			

Example	Designation	Option	Meaning
1	8. position: Harmonic effects on power system	0	Not relevant for cabinet
		1	6-pulse input
		2	12-pulse input
		3	18-pulse input
		4	24-pulse input
A	9. position: Number of systems connected in parallel	A	Compact unit
		B	Single device with system management
		C	Multiple device with 2 parallel circuits
		D	Multiple device with 3 parallel circuits
		E	Multiple device with 4 parallel circuits
		F	Not relevant for cabinet
		G	Multiple device with 5 parallel circuits
		H	Multiple device with 6 parallel circuits
		J	Multiple device with 7 parallel circuits
		K	Cabinet with one compact unit
		L	Cabinet with 2 identical compact units
		M	Cabinet with 3 identical compact units
		N	Cabinet with 4 identical compact units
		P	Cabinet with 5 identical compact units
		Q	Cabinet with 6 identical compact units
		Y	Cabinet with different compact units
G	10. position: Supply voltage	A	230 ... 415 V 3 AC TN/TT, 50 ... 60 Hz
		B	Restricted application: 230 ... 415 V 3 AC IT, 50 ... 60 Hz
		C	230 ... 500V 3 AC TN/TT, 50 ... 60 Hz
		D	230 ... 500 V 3 AC IT, 50 ... 60 Hz
		G	230 ... 600/690 V 3 AC [1)] TN/TT, 50 ... 60 Hz
		H	230 ... 600/690 V 3 AC [1)] IT, 50 ... 60 Hz
		J	850 … 950 … 990 V 3 AC
		K	1000 V 3 AC
		L	Independent of voltage
		M	1140 V 3 AC
3	11. position: Multiplier for output current	0	* 0.01
		1	* 0.1
		2	* 1
		3	* 10
		4	* 100
1	12. + 13. position: First two digits of output current	…	Two positions for approximate specification of output current, e.g.: 11th position = 3, 12th position = 8, 13th position = 2 means: Output current approx. 10 * 82 = 820 A. In the case of cabinets containing multiple compact units, the output current of the largest compact unit must be specified. It is not permissible to state the digit 9 here. If the rated current of an inverter is 940 A, for example, the order number positions for the output current must be reduced. ⇒ 11th position = 3, 12th position = 8, 13th position = 8. This can mean that the order
-			

Example	Designation	Option	Meaning
0			number of the next smaller unit is reduced as well. If it had, for example, an output current of 890 A. ⇒ 11th position = 3, 12th position = 8, 13th position = 7
A	14. position: Option module	A	IEC, EN
		U	NRTL-certified (by TÜV) and/or UL-certified
A	15. position: Customer or sector design	A	Standard
		B	Customized design xyz1
		C	Customized design xyz2
7	16. position: Version/release number	7	Version/release number T..7

1) With an NRTL unit ("U" in 14th position of order number), the voltage range ends at maximum 600 V, otherwise at 690 V.

Short designation

e.g. T 07-30 / 400 / 12 / 6

The short designation specifies the following details:

- Inverter development date
- Continuous shaft output of the connected motor for four-pole motors operating up to 50 Hz
- Rated supply voltage
- Pulse operation

What the icons mean:

Table 3-1 Example for short designation

Example	Meaning
T	SINAMICS G180
07	Modification status
30	Continuous shaft output [kW] of the connected motor
400	Rated supply voltage [V]
12/6	Pulse operation Input /Output If this information is missing, then it is a 6 / 6-pulse inverter.

Type code

e.g. 2T 2 A- 0 7 4 0 0- 055

The type code describes the inverter type in more detail. Always state the type code as well as the serial number and other rating plate data for enquiries to the factory.

What the icons mean:

Example	Designation	Option	Meaning
2T	Device type	2T	SINAMICS G180 voltage-source DC link inverter
		2x	Cabinet unit system with one or more inverters. The attainable shaft outputs of all installed inverters are added together.

Example	Designation	Option	Meaning
2	Degree of protection	1	IP00
		2	IP20
		3	IP21
		6	IP 54
		7	IP55
		9	Other
A -	Number of pulses in the input	A	6-pulse input
		F	12-pulse input
		K	18-pulse input
		L	24-pulse input
0	Mechanical design	0	Compact device with air cooling
		2	Compact device Plus with air cooling
		3	Compact device with water cooling
		7	Cabinet unit with water cooling
		8	Cabinet unit with air cooling
		9	Special version
7	Modification status	5	Modification status 5
		6	Modification status 6
		7	Modification status 7
4	Line voltage	4	400 V unit
		5	500 V unit
		6	690 V unit
		9	950 V unit
0	Number of parallel line-converter systems	0	Single device without system management
		1	Single device with system management
		2 ... 7	Multiple device with corresponding number of parallel systems and system management units
0-	Number of parallel machine-converter systems	0	Single device without system management
		1	Single device with system management
		2 … 7	Multiple device with corresponding number of parallel systems and system management units
055	Achievable shaft output [kW] for continuous output current	…	If the first position is 9, the other two digits show the power in kW * 100.

Other version designation

e.g. A *type code* O B D I M 4

The other version designation of the inverter consists of the type code and seven other characters. This designation is specified on the rating plate. It is used in commercial written communication and is as follows:

Example	Designation	Option	Meaning
A	Accessories	A	Standard accessories
		D	Accessories with bypass for mains operation with direct activation
		N	Accessories according to NAMUR Guideline NE37 with Test-Normal switch
		Q	Accessories with main switch, external handle
		W	Accessories with main switch, internal handle
		S	Accessories with main switch, main contactor, EMERGENCY STOP in door and local/remote switch
		Z	Customer-specific accessories
2T2A-07400-055	Type code	Type codes of the inverters	
O	Braking device	O	Inverter without braking device
		B	Inverter with braking device
		Y	Inverter with braking device and electrical special design
		Z	Inverter with electrical special design, e.g. design according to ZLU
B	RFI suppression filter	O	Without filter
		A	With radio interference class A filter, category C2 or C3
		B	With radio interference class B filter, category C1
		L	With radio interference class A filter and with LHF
		M	Without RFI suppression filter and with LHF
D	Inverter output filter	D	Standard du/dt filter
		V	Strengthened du/dt filter
		S	Sine-wave filter
I	Internal inverter display	O	Without internal inverter display
		B	With internal and external inverter display
		E	With external inverter display
		I	With internal inverter display
		R	With internal Russian inverter display
		S	With external Russian inverter display
		T	With internal and external Russian inverter display
M	Bus board	O	Without bus board
		C	With CAN bus board
		M	With Modbus RTU board
		N	With Profinet board
		P	With Profibus board
		T	With Modbus TCP-IP board
4	Peripheral board	O	Without peripheral board
		1	With peripheral board 1
		2	With peripheral board 2
		3	With peripheral board 3
		4	With peripheral board 4

Preparations for use 4

4.1 Transporting inverter

Procedure

- Personnel operating cranes and fork-lift trucks must be appropriately qualified.
- Only use approved, undamaged and adequately dimensioned lifting equipment. Check the equipment before using it.

WARNING

Falling loads

If you are standing under a suspended load, then you are at risk of injury if the load falls off the hoisting gear. This can result in death, serious injury or material damage.

Never stand in the area beneath a suspended load.

WARNING

Accidents during transport and when lifting

This can result in death, serious injury or material damage.

Carefully observe the transport instructions in this document as well as the generally valid accident prevention regulations – especially BGI 556.
Always wear personnel protective gear such as protective footwear and gloves and a helmet.

The inverters are packaged by the manufacturer so that they can be transported on trucks.

NOTICE

Damage to inverters during transportation

The inverters can become damaged if they are incorrectly transported.
Observe the environmental conditions for transport in the technical data.

- Transport compact devices with cardboard packaging horizontally and cabinet equipment with plastic bubble wrap upright on wooden pallet.
- Inverters are highly sensitive electronic devices. Pay attention to the stickers and warnings on the packaging.
- Only transport the equipment with modern, air suspension trucks on asphalt roads. If you cannot comply with these conditions, package the devices in accordance with the special requirements. Consult the factory for this, for example for marine packaging.
- Never lift the compact devices at the plastic cover, but always from below according to the following diagrams.

Lifting compact devices - wrong

Lifting compact devices - correct

NOTICE
Damage to inverters during transportation When returning the unit, only transport it in the original packaging as otherwise the unit could be damaged during transport which means that the warranty becomes null and void.

⚠ CAUTION
Risk of injury when lifting heavy loads Compact units, depending on the type, from frame size K3, weigh more than 30 kg. Do not try to manually lift devices more than 30 kg.

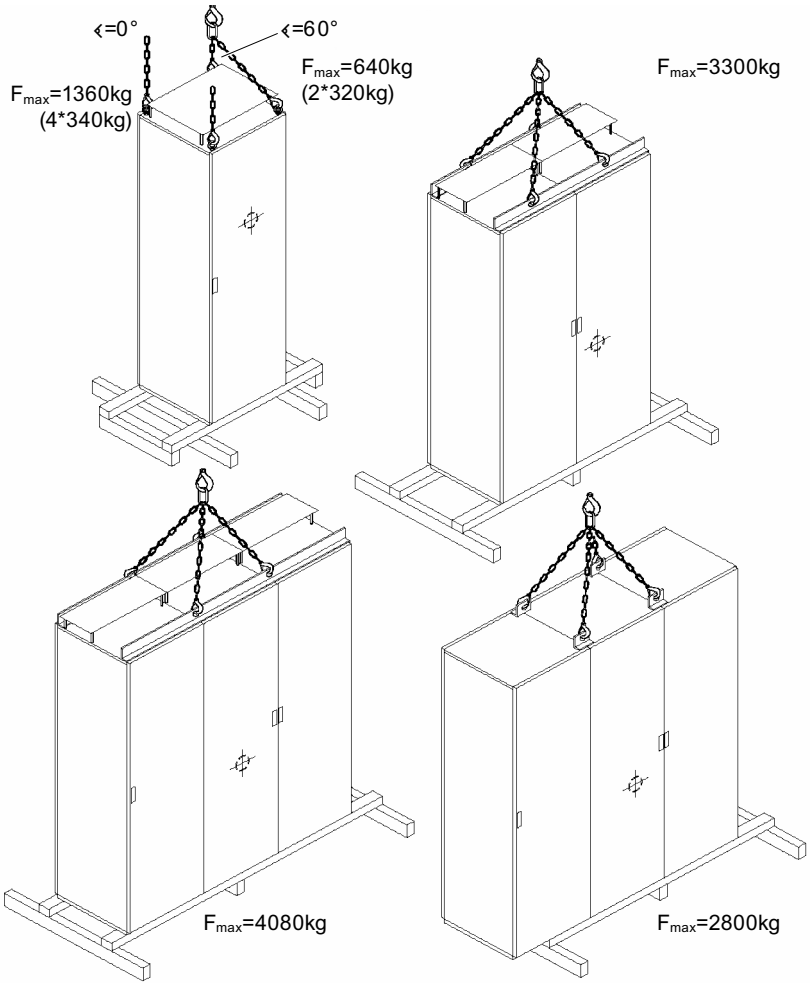

Figure 4-1 Lifting with a crane

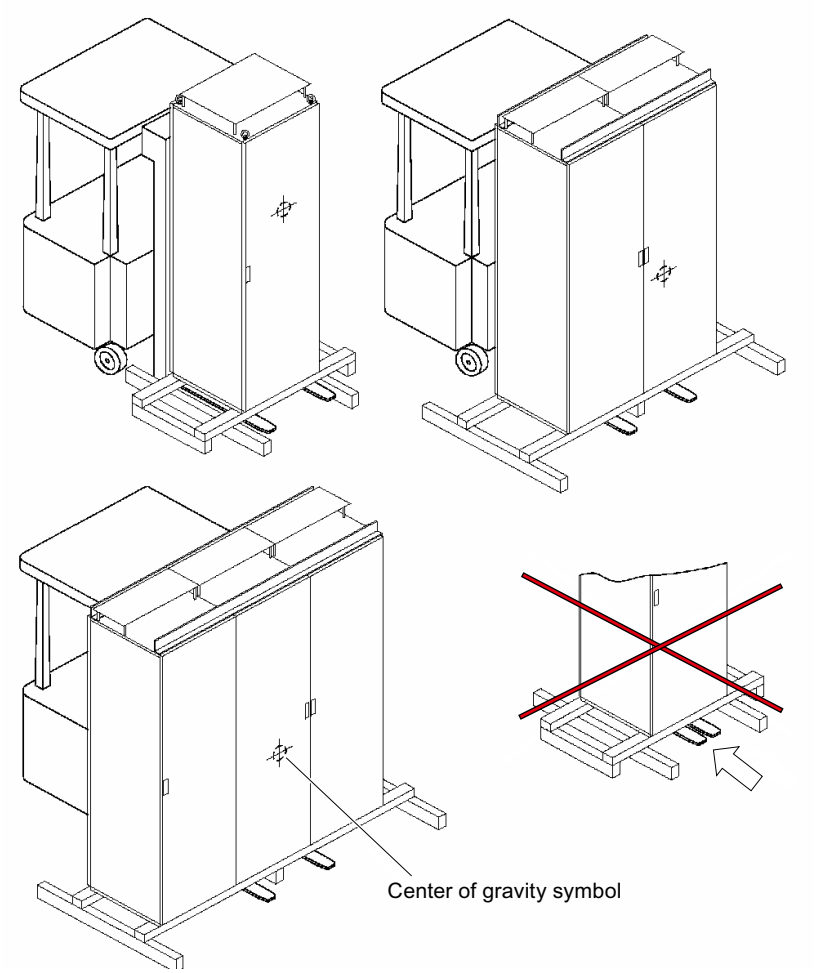

Figure 4-2 Transport with forklift

4.2 Storage of the inverters

Only store the equipment in a dry storage area with undamaged packaging.

NOTICE
Destruction of the inverters as a result of improper storage Observe the environmental conditions for storage in the technical data. The inverters will be destroyed if you store them outdoors. Store the inverters in enclosed, dry rooms.

WARNING

Injury due to explosion of capacitors

If the unit has been stored for longer than two years, the DC link capacitors can explode during commissioning. Reform the DC link capacitors if the unit has been stored for longer than two years. Contact the factory to determine what measures must be taken.

4.3 EMC

4.3.1 Install and connect in accordance with EMC.

Note the following rules regarding the installation and connection of inverters:

- Connect the cable shield over a wide area and with low inductance. Placing the shield over bundles of wires has practically no shield effect.
- If you also want to use the shield as PE conductor, connect the shield doubled.
  - Use a low-inductance and wide area shield at the cable entry for EMC reasons.
  - Use a plait on the PE rail as a precaution.
- For signal lines with Sub-D male or female connector, place the shield over the Sub-D connector or socket. Additional application at the cable entry is no longer necessary.
- Install cables in such a way that there are no crossovers between control cables and power cables. If you cannot prevent a crossover on the cable ducts, then make the crossover at an angle of 90°.
- Ensure that all metallic parts of the switch cabinet are surface-connected with good conductivity. Connections with paint layer are not permitted.
  - Use contact disks or galvanized plates.
  - When connecting the switch cabinet door to the switch cabinet, use grounding straps that are as short as possible
- Connect all circuit breakers, relays, solenoid valves etc. in the switch cabinet to RC interference suppressors.
  - Do not use any diodes or varistors.
  - Install the protective circuit directly on the relevant coil.
- Twist unshielded wires. This particularly includes analog signals of the same power circuit i.e. supply and return wires.
  Keep the area between supply and return wires as small as possible in order to avoid unnecessary loop antennas.

- Separate the power cables of the inverterinput and the inverteroutput by spacing them or using grounded separating plates.
- You may interrupt the shielding of power cables by installing components such as output contactors, reactors, sine filters etc. Mount the components on a galvanized sheet. The sheet simultaneously provides shielding for the incoming and outgoing motor wires.

4.3.2 Examples for correct EMC connection

You can see below some examples of expert connection of shielded cables at compact units.

If you would also like to apply cable shields with metal cable ties or metal clamps, install shielding buses for cabinet devices.

Cable entry on a compact device with shield connection using metallic cable ties

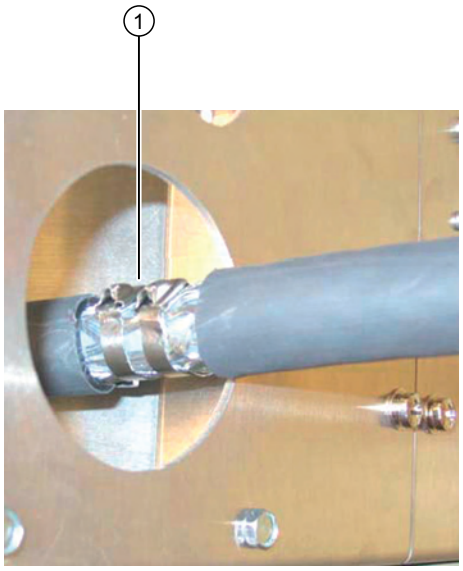

Correct connection for EMC - Variant 1

Cable entry of small control lines with shield on the case and signal lines with shield on the Sub-D connector

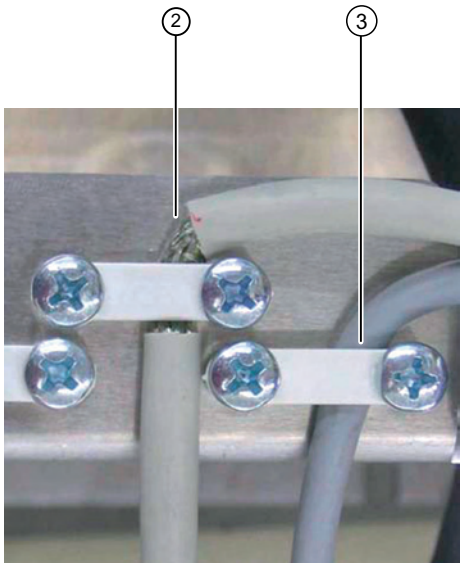

Correct connection for EMC - Variant 2

① Line or control connection from approx. 10 mm outside diameter

② Control cable up to approx. 10 mm outside diameter

③ Signal cable

You can also use EMC threaded connections instead of the metal cable ties. In this case, remove the sheet metal with the cable tie lugs.

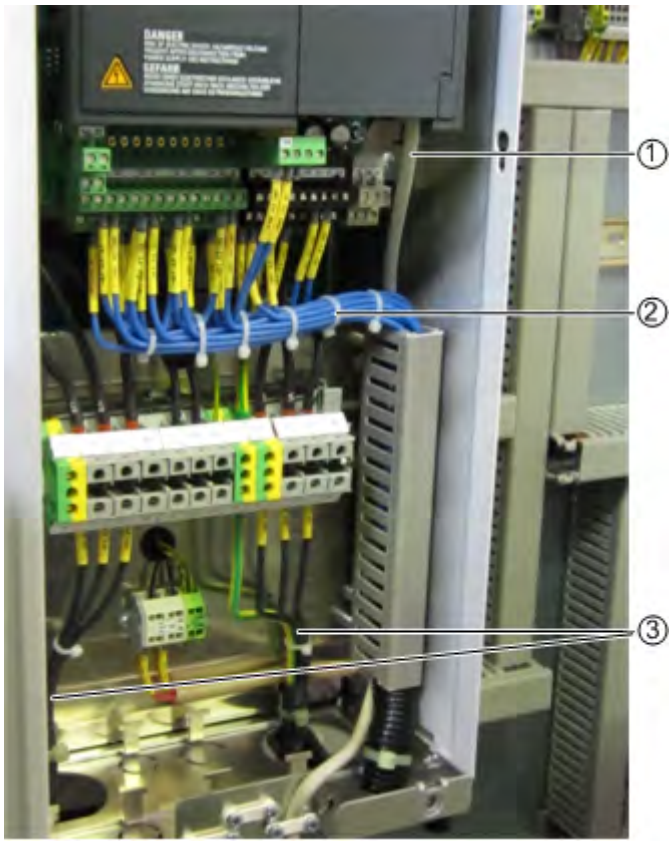

① Signal cable
② Control cable
③ Motor and power supply cable

Figure 4-3 EMC - wiring overview

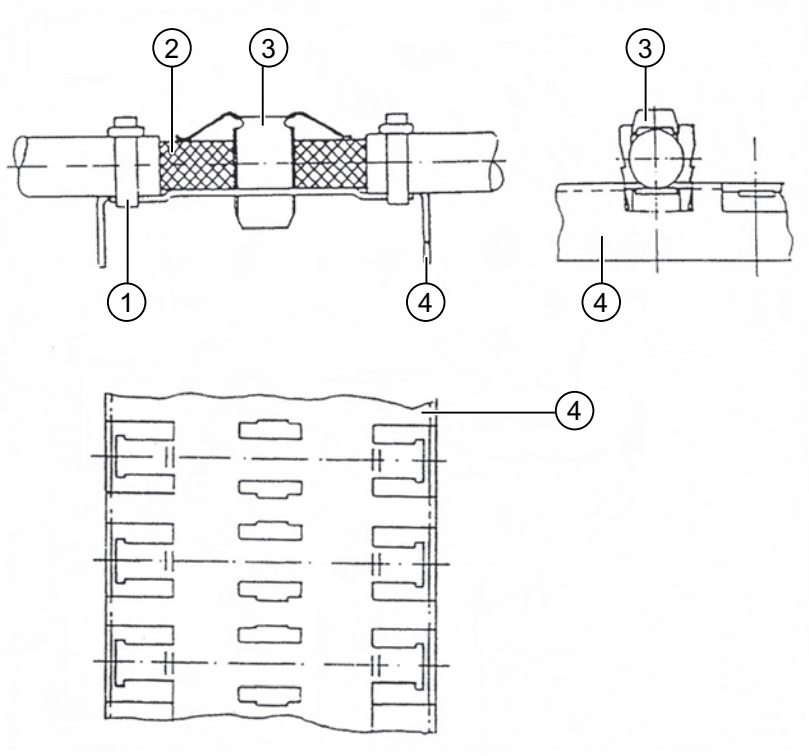

① Cable tie
② Place with insulation removed
③ Contact clip
④ Shielding bus

Figure 4-4 Shield connection for cabinet devices

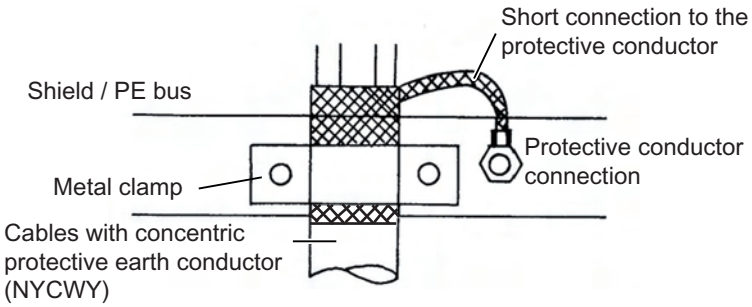

Figure 4-5 Shield connection for cable type NYCWY

4.3.3 Radio interference class

You can read the radio interference class of the inverter at the version designation of the rating rate or from the order confirmation. Further information can be found in the "Type designations" (Page 27)section.

4.3.4 EMC environment category

The noise immunity of these frequency inverters complies with the highest environment category "industrial environment" according to EN 61800-3. Nevertheless, problems for the inverter can occur if other devices exceed EMC limit values for interference emission. In this case, contact the Service Department of the manufacturer.

Table 4-1 Environmental categories and classification of units

Category and environment according to DIN EN 61800-3	1. environment (residential area - public grid)		2. environment (industrial area - non-public grid)		
Categories after edition 2005-07	C1	C2	C3		C4
Class and group according to DIN EN 55011 (2007-11)	Class B, Groups 1 and 2	Class A, Group 1	Class A, Group 2 (I ≤ 100 A)	Class A, Group 2 (I > 100 A)	-
Classification of units	Grounded line supply				IT line supply or I > 400 A
	Optional	Compact units	Cabinet units		All units

Category C1: Product with a rated voltage of < 1000 V, use in the 1st environment

Category C2: Product with a rated voltage of < 1000 V, use in the 1st environment and installation and commissioning by personnel knowledgeable about EMC.

Category C3: Product with a rated voltage of < 1000 V, use in the 2nd environment

Category C4: Product with a rated voltage of ≥ 1000 V or rated currents ≥ 400 A or used in a complete plant or system in the 2nd environment

If the application requires category C2 limits (Class A, Group 1 according to EN 55011), the system must be installed by an EMC specialist. In addition, the following note also applies:

Note

For units in category C2 the following applies:

"This is a product of category C2 acc. to EN 61800-3. If not correctly installed and commissioned, this product can cause radio frequency interference in residential areas. In this case, it may be necessary for the company operating the unit to take corresponding measures."

If the application requires category C3 limits (Class A Group 2 acc. to EN 55011, whereby these limit values lie below those of Class A Group 1), then the following note applies:

Note

For units in category C3 the following applies:

"This product is not suitable for connection to a public low-voltage grid, which supplies residential buildings. When connected to a public low-voltage grid, high frequency interference can be expected."

4.4 Realizing operation in the explosion-protected zone

Inverters in the Ex-Zone

WARNING

Explosion hazard

If you operate the inverter in the Ex-Zone, explosions can occur which cause property damage, serious injuries or death. Only operate the inverter in the safe Non-Ex-Zone.

Motor in the Ex-Zone

Motors connected to the inverter can be operated in the Ex-Zone. Also observe the following conditions:

- Ensure that the motor is approved for inverter operation and that it has a corresponding rating plate for inverter operation.
- Ensure that the motor is approved for the Ex-Zone. Also check the motor rating plate.
- Ensure that the motors are equipped with PTC sensors according to DIN 44081 or DIN 44082 as well as IEC 60034-11-2 Type A (EN 60947-8 and VDE 0660-303). Connect these PTC thermistors to the peripheral board –X3:90 to 94 . This is how you protect the motor against an inadmissible temperature rise due to overload according to DIN EN 60079-14/ VDE 0165-1 and EN 50281-1-1 (dust EX).
- Observe the safety regulations for use concerning motors in the Ex-Zones e or d. Directives 94/9/EG and EN 60079-14 regulate this use.
- Ensure that the motor is now only operated in the intended speed control range. Under "P-MOTOR DATA" and "P-DRIVE DATA" enter the values stated on the motor rating plate for "fmin" and "fmax" .
- Do not exceed the maximum motor cable length, otherwise impermissible voltage increases can occur. For more detailed information, refer to the section titled "Motor connection" (Page 57).
- Ensure that Ex e-motors are tested for increased safety together with the inverter at the manufacturer's factory. The system must not be operated without the test report.

- In the case of Ex e and Ex n motors, set the values for "I contin.", "I short" and "t short" to the values stated by the manufacturer. Do not change these values again without consulting the motor manufacturer.
- Protect inverter-supplied motors in the Ex-Zone using PTC thermistors. An evaluation circuit for the motor PTC thermistor is integrated in the "peripheral board 2 / 4" option for this. More detailed information can be found in the section "Peripheral boards 1 to 4" (Page 136). The shutdown in the inverter is performed electronically.

Safety during shutdown

The risk analysis according to EN 1050 or DIN EN ISO 14121 (draft standard) showed that in comparison to the shutdown using contactors, only the additional hazard due to dangerous shock currents occurred in the inverter.

Due to the redundant design of the electronic shutdown route, it is achieved that the shutdown is still ensured even if a fault in the electronic shutdown route itself occurs.

As components proven in operation are also used, the inverter is in compliance with EN 954-1, Category two.

- If you do not use this electronic shutdown, the motor PTC thermistors must be routed via ATEX-certified thermistor evaluation units, e.g. CALOMAT® CK140 … CK145.
- If you use CALOMAT® devices, you must use a line contactor on the input side.
  - In this case, loop the contact of the CALOMAT® directly into the coil circuit of the line contactor.
- Otherwise, perform the wiring of the line contactor according to the description of the main contactor function in section "Contactor functions" (Page 108).

Installation 5

5.1 Installing inverter - General notes

- Install the inverter so that clean and dry cooling air can enter and leave without obstruction.
- Maintain the cooling air clearances stated in the dimension drawing.
- Read the degree of protection of the device off the rating plate.
- Note the following information about the degrees of protection:

Degree of protection	Significance acc. to DIN 40050	Installation / mounting
IP20	Protection against foreign bodies larger than 12,5 mm, no protection against water	Suitable for installation in switch cabinets or installation in air-conditioned or ventilated, dry control rooms.
IP21	Protection against foreign bodies larger than 12,5 mm, protected against dripping water	For installation in air-conditioned or ventilated, dry control rooms
IP23	Protection against foreign bodies larger than 12,5 mm, protected against spray water	For installation in air-conditioned or ventilated control rooms
IP41	Protection against foreign bodies larger than 1 mm, protected against dripping water	For installation in air-conditioned or ventilated, dry control rooms
IP54	Protection against dust deposits, protected against spraying water	For installation in rooms

NOTICE
Dirt If you do not protect the device against large accumulation of dust, high concentration of chemically active harmful substances, mold formation or the penetration by vermin, this can result in damage to and failure of the device. Take suitable measures to protect the unit against these environmental influences. Observe the specified environmental conditions in the technical data.

5.2 Installing compact devices

Procedure

- Install the compact devices directly in a control room or install compact devices in a switch cabinet.
- Note when installing in a switch cabinet that the ventilation of the inverter is not designed for air counter-pressure.
- If you use switch cabinets with filters, provide corresponding cabinet fans for the equalization.

We recommend the following procedure when mounting the compact unit to walls or panels:

1. Prepare the holes for the four fixing screws. Refer to the technical data for the relevant dimensions.
2. Screw in the two lower screws until they have taken a firm grip.
3. Lift the compact unit, if required using suitable lifting equipment, onto the two lower screws. The hole in the upper center of the base plate can be used to lift the unit using a hook.
4. Press the compact unit against the panel and tighten the upper two fixing screws.
5. And finally tighten the two lower screws.

To remove, first release the lower screws, then the upper screws and lift the unit from the panel.

5.3 Protective cover IP21 for compact and compact Plus devices

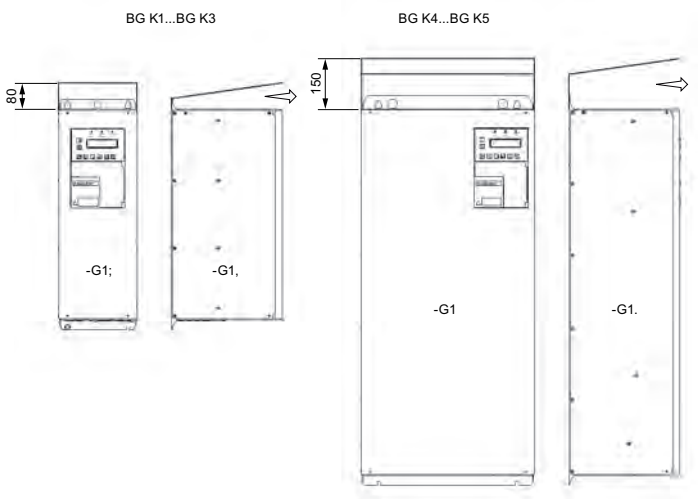

Figure 5-1 Canopy IP21

All compact units have degree of protection IP20. The canopy with degree of protection IP21 is available as an accessory for all compact and compact Plus devices. The cover is 5 mm

wider on both sides than the inverter.. Take account of this clearance for the alignment. Leave the outlet area at the front clear.

Proceed as follows to install the roof supplied loose:

1. Screw the inverter without cover on to a mounting plate. Do not tighten the top two mounting screws completely.
2. Slide the cover under the not yet completely tightened mounting screws.
3. Tighten the mounting screws completely.

With degree of protection IP21, the type code changes from 2T2A.....-... to 2T3A.....-... .

5.4 Installing cabinet units

- Install cabinet units on level mounting shelves. Wall mounting is permitted.
- If no clearances are stated in the dimension drawing of the order documentation, cabinets can be arranged next to each other.
- Provide the corresponding openings for the cable entry.
- Ensure that the cabinet frame is resting on the floor.
- If the cable opening is very large, anchoring to the floor increases the safety.
- If larger units have been separated for transport, make all the connections at the separation points again.

NOTICE
Overheating If you do not remove the transport rails installed on the cover before commissioning, the inverter can be damaged due to overheating. Remove the transport rails before commissioning.

Canopy

Install the protective covers on the top of the cabinet. Proceed as follows:

1. Remove any transport rails present. Keep these for later transport.
2. Screw four bolts into the thread provided on the inverter cabinet.
3. Put on the cover and firmly screw on the cover using the screws provided.

NOTICE
Foreign bodies in the cabinet If you drop washers or screws into the cabinet during installation, this can result in destruction of the device. Ensure that no washers or screws fall into the device.

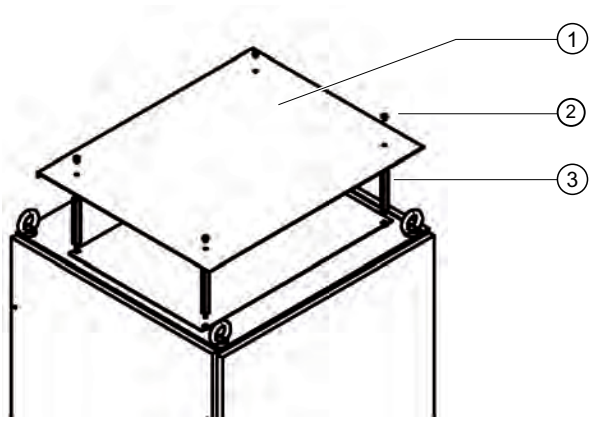

① Protective cover
② Screws
③ Bolts supplied in the switch cabinet

Figure 5-2 Protective cover

5.5 Installing external display

The external display with the item number L0296033 has the same functionality as the internal display. You can connect the display to the inverter at two connectors:

- At RJ-10 connector -X26 for a maximum cable length of 5 m.
- At the 9-pin D-sub connector -X51 and with a supplementary 24 V voltage supply for a maximum cable length of 1000 m.

Procedure

Use the display in control panels or doors. Note the following dimensions for the opening:

Width x Height [mm]: $138^{+1} \times 92^{+0.8}$

The degree of protection is IP54.

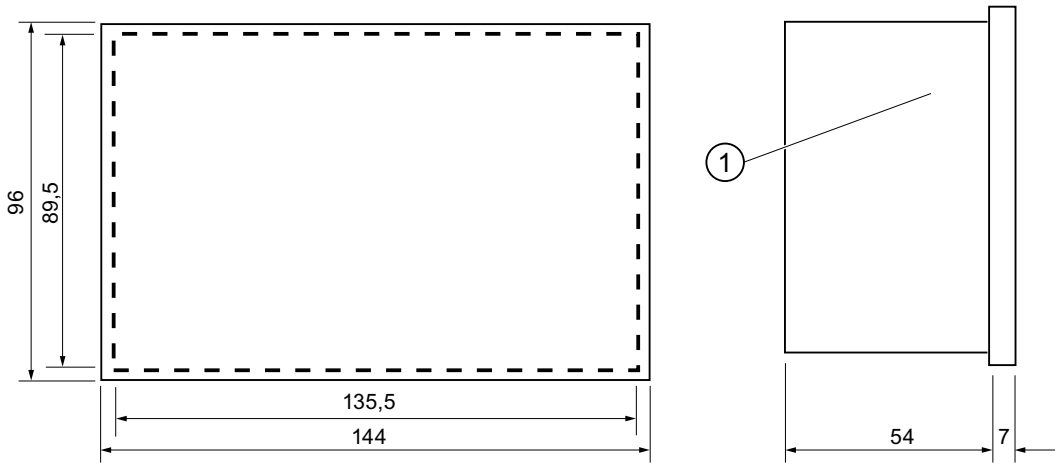

① Contrast setting

Figure 5-3 Dimension drawing - External display

Connection for installation in the switch cabinet door with maximum 5 meters connection cable length

Use the connecting cable with item number L0330600.

1. Shorten the cable to the required length.
2. Connect up the cables using end sleeves as illustrated in the diagram below.

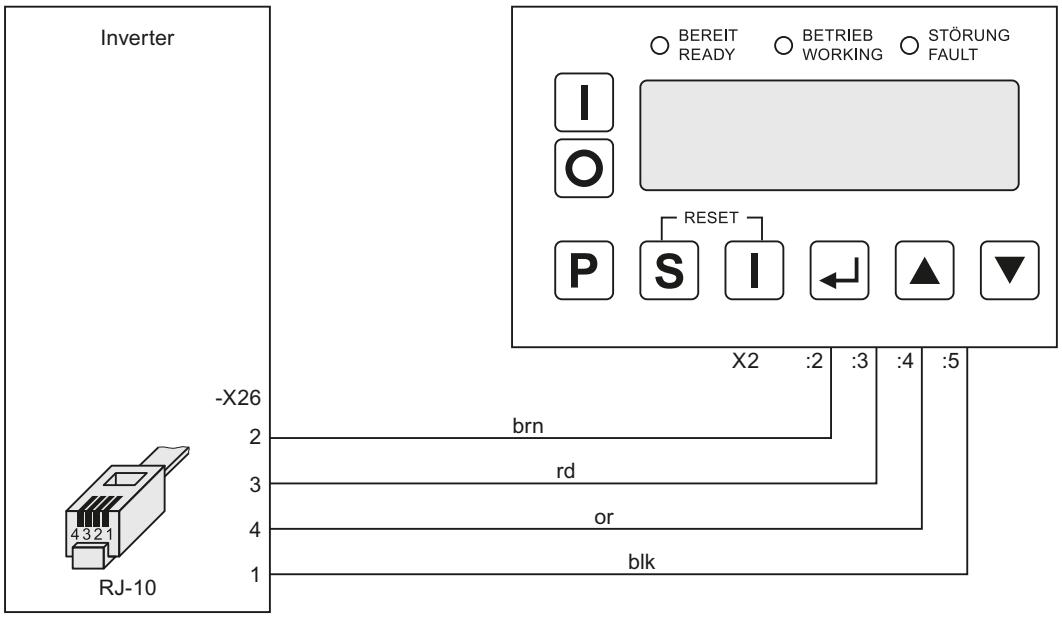

Figure 5-4 Display - Installation in switch cabinet door

Connection for external installation with maximum 1.000 meters connection cable length

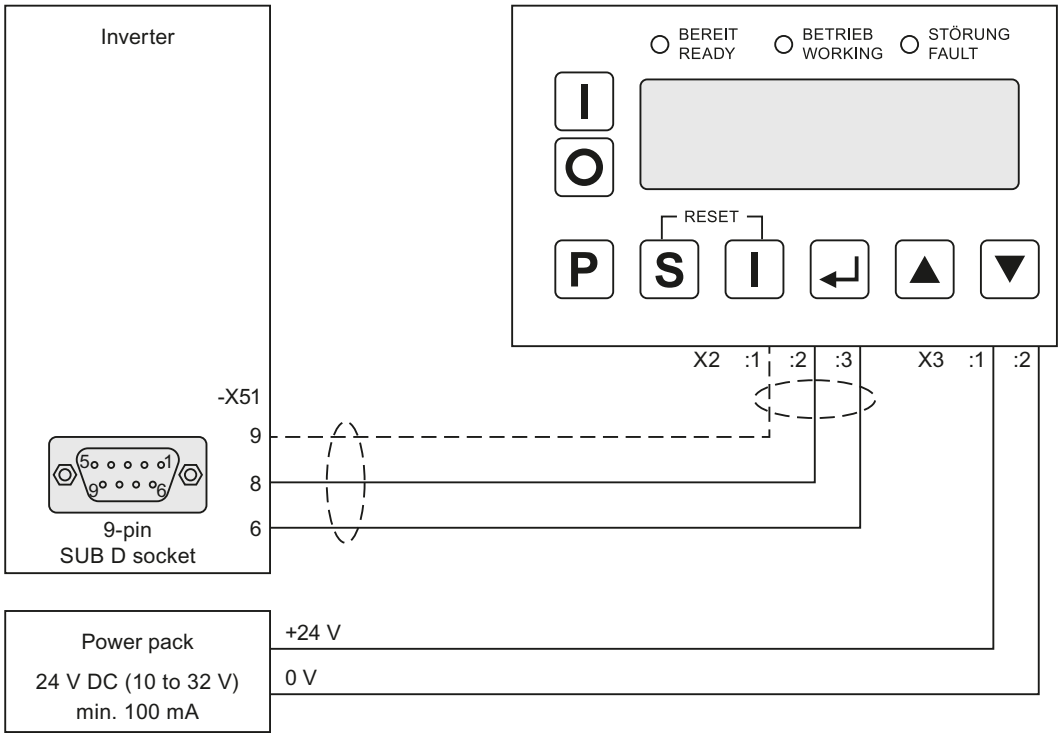

Figure 5-5 Display - external installation

Use shielded connection cables.

Electrical connection 6

6.1 General information about the electrical connection

Please note the following regarding the electrical connection.

- When installing cables and selecting the cabling materials, make sure that you provide adequate isolation between circuits of different voltage classes (DVC), e.g. by using cables with reinforced insulation or by routing cables in separate cable ducts.
- Make sure that the cables are mechanically secured, e.g. using cable ties, against accidental disconnection.

For detailed information about cabling and connections, please refer to DIN EN 61800-5-1, section 4.3.8.

Note

Familiarize yourself with the local safety requirements and national safety guidelines and always observe them.

NOTICE

Use of aluminum cables at unsuitable terminals

If you connect aluminum cables to terminals which are not suitable for the purpose, corrosion will develop. The equipment will be damaged as a result.

Use special cable lugs which are designed for connecting aluminum and copper.

Please contact the Siemens Service (Page 161) for advice about box terminals.

6.2 Protecting the inverter

When protecting the inverter a distinction must be made between the two cases.

Procedure when the motor has approximately the same rating as theinverter ($I_{mot} \geq 0.5 * I_{fu}$)

- Protect the inverter against short-circuits.
- Take the fuse value from the technical data or, using the inverter continuous input current stamped on the type plate, select the next larger gL fuse.

- Locate a gL fuse or circuit breaker upstream from the inverter.
- In the case of the circuit breaker, set the thermal release to 1.2x the inverter continuous input current as stamped on the type plate and the magnetic release to the lowest possible value, between 1.5 and 2x the value of the inverter continuous input current.
  - Only use circuit breakers without time grading (time discrimination).
  - The break time of the circuit breaker in the case of a short circuit must be less than 8 ms.

Procedure when the motor has a significantly lower rating than theinverter ($I_{mot} < 0.5 * I_{fu}$)

- Protect the inverter against short-circuits.
- Dimension the fuse value as follows: $I_{fuse} < 2 * I_{mot}$. Use the next lower standard fuse value than calculated.
- Parameterize the inverter parameter P-INVERTER DATA/I contin. as a maximum to the fuse value.
- Locate a general line fuse or circuit breaker upstream from the inverter.
- In the case of the circuit breaker, set the thermal release to 2x the rated motor current stamped on the type plate and the magnetic release to the lowest possible value, between 1.5 and 2x the value of the inverter continuous input current.
  - The break time of the circuit breaker in the case of a short circuit must be less than 8 ms.

6.3 Circuit breaker

In order to safely disconnect the inverterfrom the line supply, connect a main switch or a circuit breaker on the line side of the inverter.

The main switch or the circuit breaker must be capable of carrying at least 1.2 times the inverterrated current.
The switching capacity of the main switch or the circuit breaker must equal the short-circuit current of the supply system.

6.4 Connecting control cable

- Connect the control cables as described in section "Communication options" (Page 84) or according to the supplied equipment documentation.
- Use shielded, twisted pair cables for the connection of signal lines in order to increase the signal quality.
- When installing cables and selecting the cabling materials, it is essential that you observe the information in section "Safe isolation in accordance with EN 61800-5-1" (Page 97).
- Instructions for correct EMC connection can be found in section "Correct EMC installation and connection" (Page 37).
- For more detailed information about control cable terminals, please refer to section "Technical data of control cable terminals" (Page 176).

6.5 Line supply connection

6.5.1 Suitable supply line configurations

The inverters are suitable for the following supply line configurations:

Table 6-1 Inverter types and suitable line supply configurations

Line voltage	Type designation	Supply line configuration
400 V	2T..-..40.-…	TT or TN mains power, grounded
500 V	2T..-..50.-…	TT, TN or IT mains power, grounded or not grounded
690 V	2T..-..69.-…	TT, TN or IT mains power, grounded or not grounded

WARNING

Explosion of the Y capacitors

If you operate units, category C1, C2 or C3 (radio interference suppression class A or B) with type designation "2T..-.....-....A/B...." on ungrounded mains power supplies, then this can destroy the Y capacitors at the line supply input. Serious injury and death can occur. Only use units without RFI suppression filter with the type designation "2T..-.....-....O...." on an ungrounded mains power supply. IT mains power supplies are not grounded.

6.5.2 Dimensioning mains power cables

Dimensioning

- Voltage load
  Use cables with at least U_0/U = 0.6/1 kV.
- Current load
  - Dimension the cable cross section according to the applicable standards, e.g. VDE 0298.
  - Determine the current of the mains power cable according to the inverter input current which you can find on the rating plate.
  - Use shielded mains power cables or cables with concentric protective earth conductor, type NYCWY, in order to reduce EMC interference.

- Precaution against injury due to indirect contact
  Use an overcurrent protection device with additional potential equalization on the motor in order to avoid injuries due to indirect contact.
- Protective earth conductor
  Due to the high leakage currents of the unit (> 3.5 mA), one or more of the following conditions must be fulfilled for fixed connection of the protective earth conductor:
  - The protective earth conductor must have a cross section of at least 10 mm^2 Cu or 16 mm^2 Al
  - Automatic tripping of the power supply in the event of interruption of the protective earth conductor
  - Installation of an additional terminal for a second protective earth conductor with the same cross section as the original protective earth conductor

RCD circuit breaker

WARNING

High voltages

This product can cause a direct current in the protective earth conductor. When a residual current device (RCD) or a residual current monitor (RCM) is used for protection in the event of direct or indirect contact, only an RCD or RCM of type B is permissible on the power supply side of this product.

- Use an RCD circuit breaker with high leakage current due to the high capacitive leakage currents. The leakage current basically depends on the type, length and laying of the motor cable.
  - Use at least a 500 mA RCD circuit breaker for up to approx. 100 kW inverter output.
  - Use at least a 1 A RCD circuit breaker for more than 100 kW inverter output.
  - The RCD circuit breakers used must be of type B "sensitive to all current types" with this label:

6.5.3 Connecting mains power cable to the inverter

You do not need any N conductor.

Procedure

- Only connect the inverter via a permanently routed connecting cable. Refer to the following table for the possible connection cross-sections for compact devices. The connection cross-sections for cabinet units can be found in the technical data of the inverterdocumentation.
- Observe the switch manufacturer instructions when connecting cables directly at the main switch. These are provided in the circuit diagram pocket in the invertercabinet. If necessary, special equipment cable lugs must be used in order to be able to utilize the connection spaces available.

Table 6-2 Conductor cross-sections for compact devices

Frame size	Flexible cable	Rigid cable
BG K1	0.2 - 6 mm²	0.2 - 10 mm²
BG K2	4 - 16 mm²	2.5 - 25 mm²
BG K3	0.75 - 35 mm²	0.75 - 50 mm²
BG K4	2.5 - 120 mm²	2.5 - 120 mm²
BG K5	2.5 - 120 mm²	2.5 - 120 mm²
BG K51	2.5 - 120 mm²	2.5 - 120 mm²
BG K6	50 - 240 mm²	50 - 240 mm²

- Connect the mains power cables L1-L2-L3 to terminals U1, V1, W1 of terminal strip -X1 of the inverter: Refer to the technical data for the correct tightening torques for the power cable connection.

NOTICE
Destruction due to nonsymmetrical current distribution In the case of high pulsing inverters, destruction of the rectifier can occur due to nonsymmetrical current distribution. Pay attention to symmetrical current distribution. Use the same cable types and lengths as well as the same connection technology for every mains power connection. Route all cables on the same or a comparable route so that the cable temperatures are the same.

6.5.4 Inverter connection for different pulse operation

Inverters with higher pulsed inputs are available for higher outputs from approx. 500 kW as they cause smaller circuit feedback on the mains power supply.

Connect the inverter to the mains power supply depending on the pulse operation:

Table 6-3 Line supply connection dependent on the pulse operation

Pulse operation	Can be recognized in the type code:	Connection at the inverter at –X1:U1, V1, W1
6	2T.A-…	Three phases
12	2T.F-…	Two secondary transformer systems each with three phases, i.e. a total of six phases. Both systems must be phase offset by 30°, e.g. using the transformer vector group Dy5d6.
18	2T.K-…	Three secondary transformer systems each with three phases, i.e. a total of nine phases. The three systems must each be phase offset by 20°, e.g. using the transformer vector group Dy0y+20y-20.
24	2T.L-…	Four secondary transformer systems each with three phases, i.e. a total of twelve phases. The four systems must each be phase offset by 15°, e.g. using two transformers with the vector groups Dy5,25d6,25 and Dy4,75d5,75.

The type code can be found on the rating plate.

6.5.5 Adjusting the line voltage at the inverter

The inverters are suitable for different supply voltages: If your device is different from the respective nominal line voltages of 400 V, 500 V or 690 V, you must adjust the line voltage at the inverter.

1. Set the parameter "P-INVERTER DATA/V mains nom." to your line voltage.
2. Set the line voltage on the device:
   - No adjustment is necessary for compact units with a width of 165 mm or 225 mm.
   - In the case of compact units with a width of 350 mm or 500 mm, you reconnect the jumpers according to the following table:

Table 6-4 Necessary jumpers for setting the line voltage

Rated voltage [V]	Voltage tolerance [V]	Necessary jumpers
230	184 … 265	1-2 / 4-8
400*	320 … 460	1-6 / 7-8
460	368 … 529	1-5 / 7-8
500*	408 … 587	1-3 / 7-8 / 4-5
575	464 … 667	1-2 / 7-8 / 3-6
690*	552 … 794	1-2 / 7-8 / 4-5

*One of these values is preset.

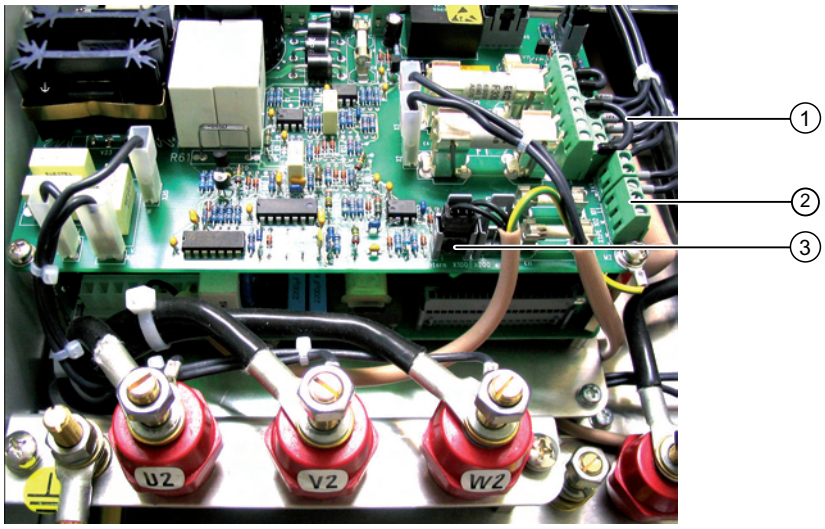

① Jumpers for rated voltage preselection

② Terminals -X101 and -X102 for an external control voltage

③ Terminal for preselection of the control voltage setting

- View as in the picture: Internal power supply
- Cable connected at connector -X200 : Power supply via terminals -X101 and -X102

Figure 6-1 Jumpers and terminals on the inverter

If a transformer is installed in a cabinet unit, the transformer connections must be changed to the correct line voltage.

6.6 Motor connection

6.6.1 Motor selection

Three-phase asynchronous motors or three-phase synchronous motors can be used for your inverter. The use of several motors simultaneously is permitted.

- The total of the motor outputs must not exceed the inverter output. You may operate smaller and larger motors in parallel on one inverter.
- Take into account during the motor dimensioning that additional losses in the motor are produced by the non-sine shaped motor current.
- Note that a motor without external ventilation will be cooled less at speeds less than the rated speed. Therefor, consult the motor manufacturer for the dimensioning of the motor.
- When using Siemens motors, refer to the list "UN03/UN04 Drehstrommotoren für drehzahlverstellbare Antriebe" to find the relevant inverter output.

6.6.2 Coil load

Note

Voltage increases due to switching flanks

The switching flanks in the voltage produced by the inverter also load the motor insulation. Excess voltages occur.

If you observe the instructions in this section, voltage peaks at the motor of more than 1,560 V do not occur. Motors which are dimensioned for inverter operation therefore do not cause any problems. If you would like to connect older motors or motors which are not suitable for inverter operation, please consult the motor manufacturer.

Pay attention to the exact compliance with the peak voltage in the motor for explosion-protected motors.

6.6.3 Motor voltage and type of circuit

Operate the motor as "star" or "delta" type of circuit according to the parameterization of the inverter.

In most cases, the parameterized motor voltage on the inverter is identical to the mains voltage. Check the parameter "P-MOTOR DATA/V-motor".

6.6.4 Dimensioning motor cables

- Voltage load
  Use cables with at least U_0/U = 0.6 kV/1 kV.
- Current load
  - Dimension the cable cross section according to the applicable standards, e.g. VDE 0298.
  - Determine the current of the motor cable according to the inverter output current which you can find on the rating plate.
- Use shielded mains power cables or cables with concentric protective earth conductor, type NYCWY, in order to comply with EMC directives.

Note the information in section "Correct EMC installation and connection" (Page 37).

6.6.5 Dimensioning maximum motor cable length

The maximum cable length is determined by the following factors:

- Peak voltage at the motor
  - All inverters are fitted with a du/dt filter. The filter limits the voltage increase time on the motor to > 0.5 µs.
  - A motor peak voltage of 1,560 V is maintained for the maximum cable lengths stated in the table.
- Inverter load
  - The capacitive load of the inverter increase with increasing cable length and/or increasing number of parallel cables.
  - The configurable inverter clock frequency influences the inverter load. If you configure the minimum possible clock frequency , the inverter load then reduces so that a larger cable length can be connected.

Table 6-5 Typical maximum motor cable lengths for different inverter versions

Device type	standard version 2T..-.....-.....D...		Version with strengthened du/dt filter 2T..-.....-.....V...	
	Cable type		Cable type	
	NYCWY	NYY	NYCWY	NYY
Compact units 400 V 2T..-(0…3)5400-... connected to line supplies up to 400 V	200 m	300 m	350 m	450 m
Compact units 400 V 2T..-(0…3)5400-... connected to line supplies > 400 V	150 m	200 m	300 m	350 m
Cabinet units 400 V 2T..-(7…8)(5…6)40.-... connected to line supplies up to 400 V	-	-	300 m	350 m
Compact units 500 V 2T..-(0…3)5500-...	-	-	300 m	350 m
Cabinet units 500 V 2T..-(7…8)(5…6)50.-...	-	-	250 m	300 m
Compact units 690 V 2T..-(0…3)5690-...	150 m	200 m	300 m	300 m
Cabinet units 690 V 2T..-(7…8)(5…6)69.-...	100 m	140 m	250 m	300 m

The data in the table specifies the typical cable length in the sense of the distance between the motor and the inverter when parameterizing the standard clock cycle frequency. Larger

distances are also possible for individual types. Contact the factory for precise values if you are in the limit range or if there is a long distance between the motor and inverter.

NOTICE
Destruction of the inverters If you lay too many wires in parallel for the motor cable, the capacitive current in the motor cable can increase unacceptably and destroy the inverter output filter. In the case of operation with several motors or parallel wiring of motor cables, the maximum possible distance between inverter and motor reduces. Cabinet units are suitable for wiring in parallel. Contact the factory for the precise values. Reduce the number of parallel wires to permissible values.

NOTICE
Destruction of the motor or the inverter output filter If you exceed the maximum motor cable length, destruction of the motor or the inverter output filter can occur. Consult the factory for longer motor cables.

NOTICE
Winding or bearing damage If you use motors which are not designed for inverter-fed operation, premature winding or bearing damage can occur. Consult the motor manufacturer to find out whether the motor is suitable for inverter operation. Please bear in mind that IEC 60034-17 is applicable to motors that are designed for line operation but are operated with an inverter. Smaller values for the peak voltage apply here. Dimension the cable lengths after consultation with the manufacturer.

6.6.6 Connecting motor cable

Connect the motor to terminals U2, V2, W2 of terminal strip -X1 of theinverter. Refer to the technical data for the correct tightening torques for the power cable connection.

6.6.7 Connecting the PTC thermistor of the motor to the inverter

- Connect the PTC thermistor of non-explosion-protected motors without peripheral board 2 / 4 to terminals 27, 28 - 58 of control cable terminal block -X2.
- If peripheral board 2 / 4 is installed, connect the PTC thermistor to terminals 90 to 94 of control cable terminal block –X3. For additional information, refer to the description of the accessories.

Note

Interference signals in PTC thermistor cables

If you lay sensor cables next to power cables, interference signals can be transmitted in the sensor cables. Lay sensor cables separated from the motor power cables. Use shielded cables in the case of stronger inductive or capacitive input couplings. Observe the minimum cross section of the PTC thermistor cable.

6.7 Connection of external control voltage

6.7.1 Provide fuse protection for external control voltage

WARNING

External control voltage without fuse protection

If you connect an external control voltage without providing suitable fuse protection, overloading and short circuits can occur. This can result in death, serious injury or material damage.

The device may only be operated with a protected external control voltage. Note the following recommendation.

Install one of the following options to protect the external control voltage:

- Miniature fuse in accordance with EN 60127: 2 A … 6 A, slow, maximum 150 VA
- Miniature circuit-breaker: 2 A … 6 A, characteristic D, maximum 150 VA

6.7.2 Use of external control voltage

The inverter generates the control voltage from the DC link voltage in normal operation.

Use external control voltage in the following cases:

- For main contactor on the line voltage side
- If the display should also function when no line voltage is present
- If the inverter should restart operation approx. 3 s faster than without external control voltage in the case of momentary mains power failures. The initialization time of approx. 3 s does not apply in the case of external supply.

6.7.3 Adapting the hardware to external control voltage

- Change the inverter from internal control voltage using the DC link to external control voltage.

Procedure

- Change over the white connector on the "switched-mode power supply" board from -X2 for "internal" to-X5 for "external".

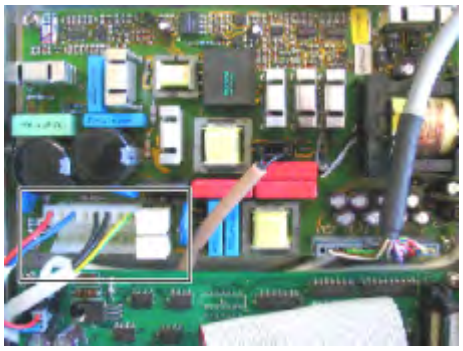

Switching power supply with connector on internal control voltage

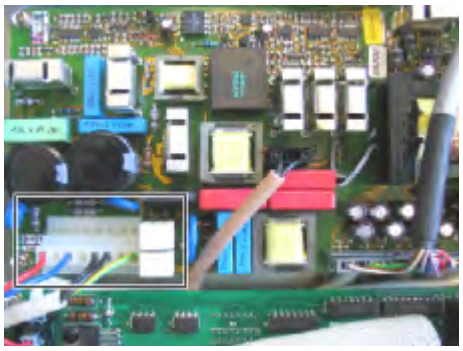

Switching power supply with connector on external control voltage

6.7.4 Preparations for accessing the "switching power supply" board

6.7.4.1 Preparing compact devices with size up to 165 mm

This instruction is applicable for compact devices up to a size of 165 mm with the identifier 2T..-07400-011 or 2T..-07500-015.

Procedure

1. Unscrew the blue cover at the screw above –X25 and lift up the cover.
2. Turn the two screws of the grey cover underneath by 90° and lift up the cover.
3. Undo all screws for the right-hand side panel which are visible from outside and one internal nut in the connection area. Lift off the side panel.

4. Replug the connector.
5. Reassemble in the inverse order.

6.7.4.2 Preparing compact devices with size up to 225 mm

This instruction is applicable for compact units up to a size of 225 mm with the identifier 2T..-07400-015 or 2T..-07500-037.

Procedure

1. Turn the four fixing screws of the gray cover through 90° and lift up the cover.
2. Unscrew the blue cover at the screw above –X25 and lift up the cover.
3. Turn the four fixing screws of the swivel section by 90°, swivel the swivel section to the right and clip the swivel section to the side panel according to the picture below.
4. Replug the connector.
5. Reassemble in the inverse order.

Compact device W=165, connector for external control voltage

Compact device W=225, connector for external control voltage

6.7.4.3 Preparing compact devices with frame size K4 with 400 V or 500 V

This instruction applies to compact units with the frame size K4 with L x W 775 × 350 mm and 400 V or 500 V rated voltage.

Procedure

1. Turn the four fixing screws of the gray cover through 90° and lift up the cover.
2. Unscrew the blue cover at the screw above –X25 and lift up the cover.
3. Remove the cover above the motor connection terminals.
4. Remove the "fan power supply" board with the five fine-wire fuses. Undo the four screws and unplug the cable for this.
5. The "switched-mode power supply" board is located below with a white connector and the sockets -X2 for "internal" and -X5 for "external".
6. Insert the connector into "external".
7. Reassemble in the inverse order.

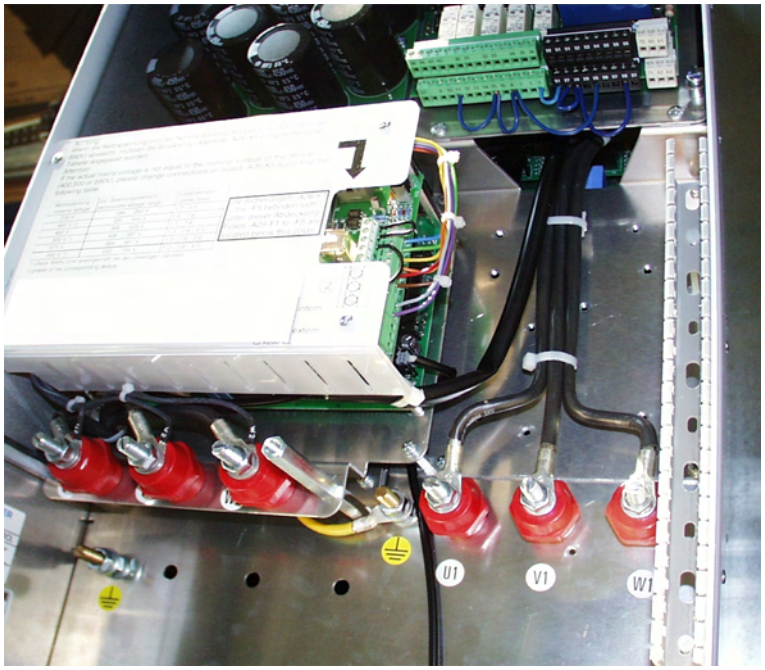

Figure 6-2 Compact device frame size K4

Note

Occurrence of malfunctions

Malfunctions can occur if you change over the connection of the sockets X100 / 200 for "external" / "internal" on the upper "fan power supply" board. Leave this connection in its original configuration.

6.7.4.4 Providing compact devices with the frame size K4 with 690 V

This instruction applies to compact units with frame size K4 with L x W 775 × 350 mm and 690 V rated voltage.

Procedure

1. Turn the four fixing screws of the gray cover through 90° and lift up the cover.
2. Unscrew the blue cover at the screw above –X25 and lift up the cover.
3. Remove the cover above the motor connection terminals.
4. On the "fan supply" board with the five miniature fuses, change over the connector from socket –X100 to –X200.
5. Reassemble in the inverse order.

Note

Occurrence of malfunctions

Malfunctions can occur if you change over the connection of sockets X2 / 5 for "external" / "internal" on the "switched-mode power supply" board. Leave this connection on "external".

6.7.4.5 Providing compact devices with frame size K5/51 with 400 V or 500 V

These instructions apply to compact units with frame size K5 or 51 with L×W (1125 or 1538)×350 mm and 400 V or 500 V rated voltage.

Procedure

1. Turn the four fixing screws of the gray cover through 90° and lift up the cover.
2. Unscrew the blue cover at the screw above –X25 and lift up the cover.

3. Turn the four fixing screws of the swivel section by 90°, swivel the swivel section to the right and clip the swivel section to the side panel according to the picture.

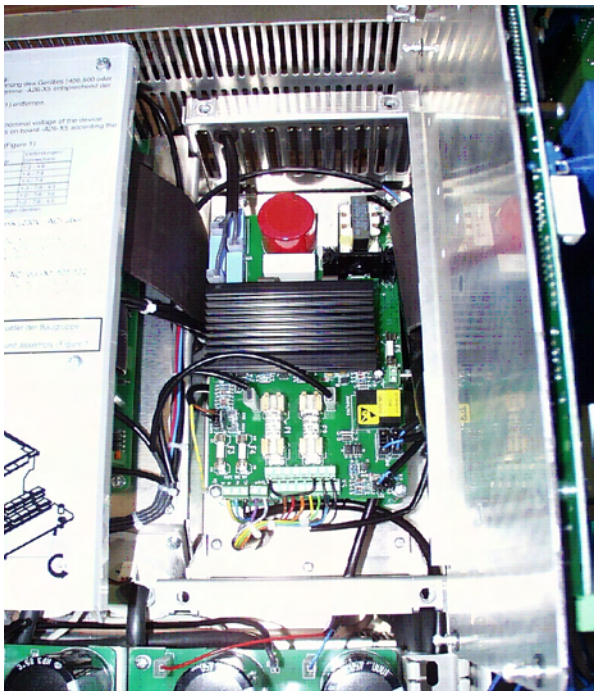

Figure 6-3 Compact unit with frame size K5 with opened control electronics

4. Remove the "fan power supply" board with the five fine-wire fuses. Undo the four screws and unplug the cable for this.
5. The "switched-mode power supply" board is located below with a white connector and the sockets -X2 for "internal" and -X5 for "external".
6. Insert the connector into "external".
7. Reassemble in the inverse order.

Note

Occurrence of malfunctions

Malfunctions can occur if you change over the connection of the sockets X100 / 200 for "external" / "internal" on the upper "fan power supply" board. Leave this connection in its original configuration.

6.7.4.6 Providing compact devices with the frame size K5/51 with 690 V

These instructions apply to compact units with frame size K5 or 51 with L × W (1125 or 1538) × 350 mm and 690 V rated voltage.

Procedure

1. Turn the four fixing screws of the gray cover through 90° and lift up the cover.
2. Unscrew the blue cover at the screw above –X25 and lift up the cover.

3. Turn the four fixing screws of the swivel section by 90°, swivel the swivel section to the right and clip the swivel section to the side panel.
4. On the "fan supply" board with the five miniature fuses, change over the connector from socket –X100 for "internal" to –X200 for "external" .
5. Reassemble in the inverse order.

Note

Occurrence of malfunctions

Malfunctions can occur if you change over the connection of sockets X2 / 5 for "external" / "internal" on the "switched-mode power supply" board. Leave this connection on "external".

6.7.4.7 Preparing compact devices with frame size K6 with 400 V or 500 V

This instruction applies to compact devices with the frame size K6 with L×W 1125×500 mm and 400 V or 500 V rated voltage.

Procedure

1. Turn the four fixing screws of the gray cover through 90° and lift up the cover.
2. Unscrew the blue cover at the screw above –X25 and lift up the cover.
3. Turn the four fixing screws of the swivel section by 90°, swivel the swivel section to the right and clip the swivel section to the side panel.
4. The "switched-mode power supply" board is located below with a white connector and the sockets -X2 for "internal" and -X5 for "external".
5. Insert the connector into "external".
6. Reassemble in the inverse order.

Note

Occurrence of malfunctions

Malfunctions can occur if you change over the connection of the sockets X100 / 200 for "external" / "internal" on the upper "fan power supply" board. Leave this connection in its original configuration.

6.7.4.8 Providing compact devices with the frame size K6 with 690 V

This instruction applies to compact units with frame size K6 with L×W 1125×500 mm and 690 V rated voltage.

Procedure

1. Turn the four fixing screws of the gray cover through 90° and lift up the cover.
2. Unscrew the blue cover at the screw above –X25 and lift up the cover.

3. Turn the four fixing screws of the swivel section by 90°, swivel the swivel section to the right and clip the swivel section to the side panel.
4. The "fan power supply" board with five fine-wire fuses and the "switching power supply" board are underneath.
5. On the "fan supply" board, change over the connector from socket –X100 for "internal" to –X200 for "external".
6. Reassemble in the inverse order.

Note

Occurrence of malfunctions

Malfunctions can occur if you change over the connection of sockets X2 / 5 for "external" / "internal" on the "switched-mode power supply" board. Leave this connection on "external".

6.7.5 Connecting external control voltage for compact devices

Procedure

- Connect the external control voltage to the terminals 101 (L1) and 102 (N).

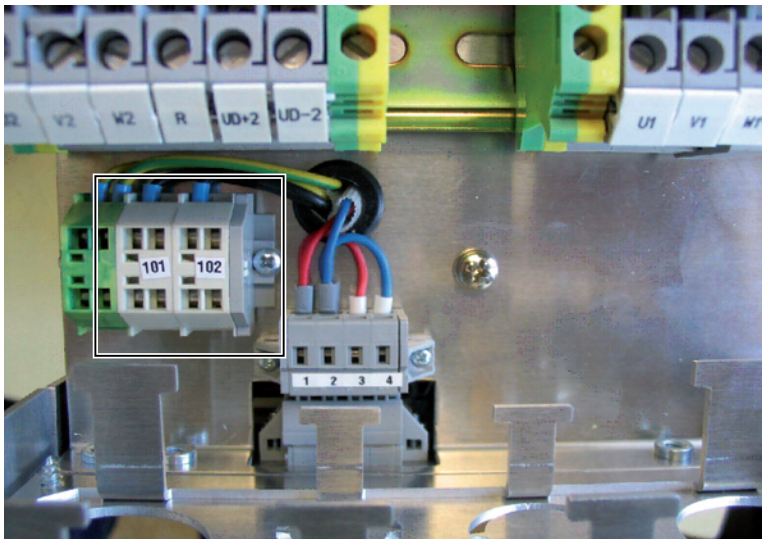

Figure 6-4 Connection for external control voltage

Use the following connection values:

Table 6-6 Connection values for external control voltage

Maximum cross section	2.5 mm²
Fuse protection	• Miniature fuse in accordance with EN 60127: 2 A … 6 A, slow, maximum 150 VA • Miniature circuit-breaker: 2 A … 6 A, characteristic D, maximum 150 VA

Voltage	230 V + 15 % - 20 %
Frequency	47 Hz … 63 Hz

For compact units with frame size K4 , terminals 101 and 102 are located on a board under the plastic cover above the motor terminals.

6.7.6 Control voltage 230 V for cabinet units

Cabinet units access the control voltage for the electronics from the control transformer. Further information can be found in the wiring diagram of the unit.

Commissioning 7

Perform the commission according to the following instructions.

In order to operate the inverter, read section "Operation" (Page 79)

Use an operating manual for commissioning a standard inverter application. Information for special applications can be found in the corresponding sections. Contact the Service Stations of the manufacturer if necessary.

Use the provided commissioning service if required. Contact the Service Center (Page 162) for a commissioning quotation.

7.1 Checks without mains power supply and without motor

WARNING

Injury due to explosion of capacitors

If the unit has been stored for longer than two years, the DC link capacitors can explode during commissioning. Reform the DC link capacitors if the unit has been stored for longer than two years. Contact the factory to determine what measures must be taken.

Checking the connections

1. Check all connections at the inverter.
   - Check whether all connections match the documentation.
   - For every control cable, check whether it is firmly connected.
2. Check whether the power connections have been connected with the correct torque. Refer to the torque table in the section "Tightening torques for power cables" (Page 176) for the torques.
3. Also check the internal power connections for units with more than 160 kW. The connections can slacken during long transport.

Checking the applied voltages

1. Check what voltage is present at the control cable terminals of –A1-X2.
   – A voltage of 32 V to 250 V must only be present at the top green terminals and/or at terminal 37 .
   – All other terminals must be supplied with a maximum voltage of 32 V.
2. Compare the line voltage you will apply with the rating plate of the inverter.
   You will find detailed information in the following table.
3. For cabinet units, identifier 2T..-8....-..., also reconnect the fan transformer –T4 to the rated mains voltage and check whether the transformer is connected to the correct voltage.
   – Compact units, identifier 2T..-0....-..., supply the fans via the DC link.
   – Thus, there is no configuration work for you.

Table 7-1 Voltage range of the different device types

Device	Type designation according to rating plate	Supply voltage range
400 V compact unit	2T..-0.40.-...	230 V … 500 V
400 V cabinet unit	2T..-8.40.-...	230 V … 415 V
500 V unit	2T..-..50.-...	230 V … 500 V
690 V unit	2T..-..69.-...	400 V … 690 V

Hardware settings

- Set the DIL switches S1 and S2 as required.
  More detailed information can be found in the section "DIL switches S1 and S2" (Page 101).

Performing insulation test

1. Take the necessary safety precautions such as covering neighboring system parts etc.
2. Connect terminals U1, V1, W1, U2, V2, W2.

3. For compact devices, detach the internal yellow-green wire from the connection point for PE.

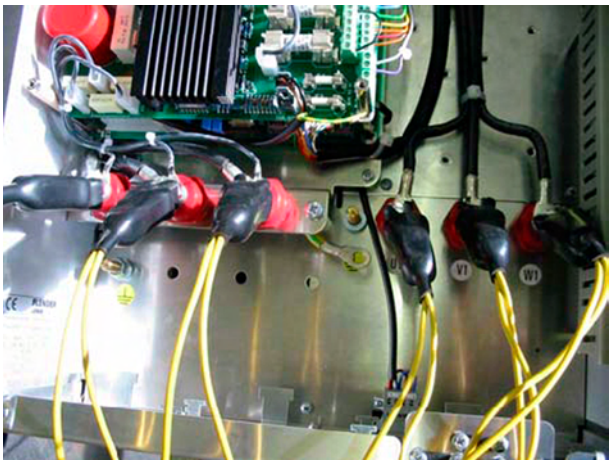

Figure 7-1 Insulation test

4. In the case of cabinet units, remove the "output filter" board –A9 or disconnect its ground connection.
5. You can find the board at motor terminals –X0:U2, V2, W2.
6. In the case of the "radio interference Class A" option, also disconnect the input side radio interference suppression capacitor –C10 from the mains power bus at -X0:U1, V1, W1 or the main switch.
7. Perform the test with maximum DC 500 V for a maximum of 2 minutes between the U1, V1, W1, U2, V2, W2 jumper and the enclosure.
8. After completion of the test, connect the output voltages U, V, W with PE.
9. Undo the above actions.

7.2 Checks with mains power supply and without motor

The load-dependent actual values, e.g. "I-motor", "T-motor" or "P-motor" are also displayed without motor. They are 0 in this case.

- Perform the following tests and configurations without motor connection. This prevents damage to the motor in the case of errors.
  If tests without motor are not possible, then perform the tests with motor.
- The "peripheral board 2 / 4" option which can be recognized from the last position of the type designation on the rating plate has safety-oriented inputs.
  Check these inputs according to the "Safe halt" (Page 139) description.

Selecting application and mode

- It is not necessary to select an application for inverters which have been fitted with a signal controller at the factory.
- The parameter assignment is adapted in the factory when the unit is being tested and is stored under the menu "P-DRIVE DATA/A" in the "Factory_Settings" application.
- Select the desired application under "P-DRIVE DATA/A", and select the desired operation under "P-OPERATION/Opr.".
  - Use the associated wiring diagram in the Appendix for this. The "Standard" application is set as the default at the factory.
  - For additional information, refer to the section titled "Standard" application" (Page 119).
- If you would like to make other changes to the parameters, these changes can be made at this point.
  In this case, the parameter "P-DRIVE DATA/A=Standard" changes to "P-DRIVE DATA/A=specific".

Note

Loss of all configured values

If you select other applications before the changed parameters have been saved, all values already set will be lost. Save the changed parameters before selecting other applications.

Checking mains power supply parameters

1. Set your mains rated voltage in the menu item "P-INVERTER DATA/V mains nom.".
   If necessary, set the controller / fan transformer correctly.
2. For additional information, refer to the section titled "Mains connection" (Page 53).

Adapting motor data

1. Under "P-MOTOR DATA"/ first set the controller variant of the inverter or the motor type.

You can enter the following control variants:

- "async_SVC": Asynchron Space Vector Control, Vector control
  - Use normal three-phase motors without special applications for inverter operation.
  - Use the rating plate data for parameterization purposes if the motor is to be operated with the inverter.
- "async_FOC": Asynchron Field Oriented Control, Field-oriented control
  - For this function, use a tachogenerator directly on the motor shaft which meets the required conditions. More detailed information can be found in the section "Sub-D connections and DIL switches" (Page 100).
  - The load machine and the required dynamics determine the maximum required impulses per revolution which the tacho should have.
  - Use at least 1,024 pulses / 360°. If you increase the dynamics, then also increase the number of impulses, e.g. to 2,048 or 4,096. Use a tacho with larger number of impulses for smaller flywheels.

A so-called field-weakening operation where the inverter output frequency is higher than the motor rated frequency is not possible with the field-oriented control.

Set the following parameters in the control version "async_FOC" under "P-MOTOR DATA/":

1. Under "/Motor type", set "async_FOC",
2. Select the tacho type used for "/Sensor".
3. Set the number of impulses per motor revolution under "/Pulses/360".
4. In addition to entering the motor data on the rating plate, also set the exact motor no-load current under "/I idle".
   - Read the rated speed /n motor from the rating plate.
   - Specify the no-load current in the operating mode "async_SVC", in mains operation or ask the motor manufacturer for this value.
5. Always perform the "Auto-Tuning".
6. Select the menu level "Expert" in order to reach the "P-CONTROL PARAMETER" menu item.
   - Adjust the optimum control behavior of your system for load change and speed change under "P-CONTROL PARAMETER".
   - Set the values for "/P sp.ctr." and "/Tr sp.ctr." in rated operation.

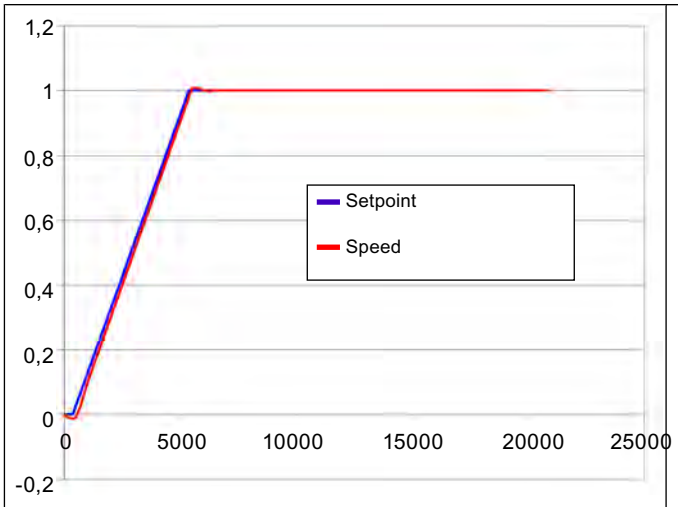

Speed regulator circuit - optimally configured

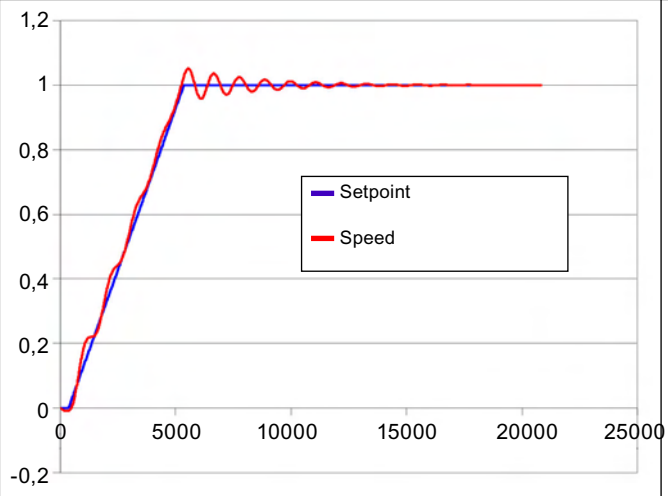

Speed regulator circuit - too short Tn-Controller

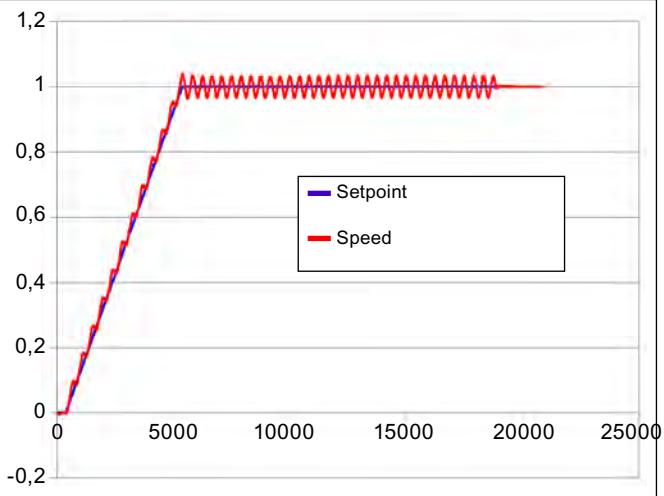

Speed regulator circuit - too high P-Controller

The following applies to all motors:

- Enter the rating plate parameters of the motor for sine mode.
- This data can be found on the motor rating plate.

Configuring drive data

Specify the speed limits and the direction of the output rotating field in the menu item "P-DRIVE DATA".

1. Determine the minimum output frequency of the output rotary field for minimum setpoint value with the "/fmin" value. The "/fmax" value specifies the upper speed limit. For more detailed information, refer to the section titled "Motor connection" (Page 57).
2. Set the rotation direction under "/Rotation":
   – "Clockwise" or "Anticlockwise" specifies the rotary field as clockwise or anticlockwise.
   – "Both" means that the rotary field depends on the polarity of the setpoint value and can be changed using the terminal block command "Reversing".
3. Set the speed of setpoint changes under "P-SPEED DEFAULT/t-accel." and "P-SPEED DEFAULT/t-decel.".

Checking all inputs and outputs

1. Check whether signals arrive correctly at all inputs and outputs.
   You can simulate all data except load-dependent data.
2. Under "P-EXTRAS/Menu" set the value for the menu level to "Standard", in order to increase the number of accessible parameters and thus be able to make further parameter adjustments.

7.3 Checks with mains power supply and with motor

Perform the following tests and configurations with an uncoupled motor. This prevents damage to the work machine in the case of errors. If test with uncouple motor are not possible, perform the tests with coupled motor. However, increased caution is thereby required.

Performing auto tuning

The inverter can be matched to the connected motor under "P-MOTOR DATA/Auto-Tuning".

- Select the "Yes" option and press the "Apply" button.
  – The inverter transmits a measurement signal to the motor.
  – The inverter calculates the current total resistance of motor winding and motor supply line from the measured values.

Checking the direction of rotation

1. Check the rotation direction at low speed directly at the motor.
2. In the case of "Rotation/both", check the rotation direction for both directions.

Checking the vibration

1. Carry out slowly the complete speed control range. Observe the motor in doing so.
   – If vibrations occur at a certain speed, contact the motor manufacturer for advice. If required, you can suppress this frequency.
2. Suppress two frequency bands with a minimum and a maximum value in the menu, which will then no longer be used by the drive under steady-state operating conditions "P-DRIVE DATA/fno1" and "P-DRIVE DATA/fno2".

7.4 Checking with motor coupled to the work machine

Perform the following tests with the driven machine.
The measurement should be taken at the highest possible output frequency and load. Consult the factory fin the case of large difference.

Symmetry of mains and motor current

1. Measure the mains current and the motor current using a current clamp meter. The measured value deviates from the displayed value on the screen depending on the type and quality of the current clamp meter.
2. Ensure that the same current flows in all three mains power phases with a maximum deviation of 5% of the inverter rated current. You thus detect whether damaging imbalance of the mains voltage is present.
3. The same applies in all motor phases with a maximum deviation of 2%. In the case of cables laid in parallel, also check the current distribution to the individual conductors. Here, you recognize insufficiently clamped connections and also damage to the motor.

Checking load-dependent measured values

- Check the motor current with the couple work machine.
- Check whether the motor current on the display in stationary operation, i.e. without acceleration or braking, exceeds the motor current on the rating plate.

Documenting measured values, saving parameter file

Document all measured values from the commissioning in a measurement report and save the parameters of the inverter with the "IMS" software.

Operation 8

8.1 Operation

8.1.1 Function of the inverter display

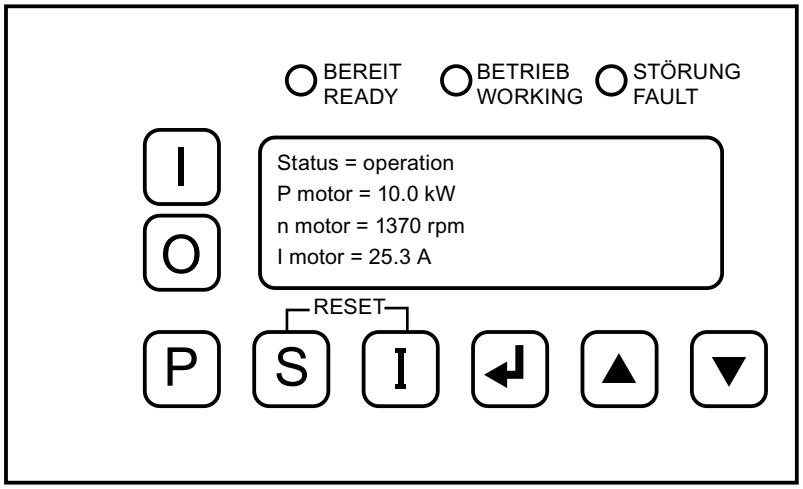

Figure 8-1 Inverter display

The display is used for operating and monitoring the inverter.

The LEDs "READY", "WORKING" and "FAULT" show the current status of the inverter.

The following data can be read on the plain text display:

- The actual values of the inverter, e.g. motor current
- All parameters
- All stored error messages

The inverter is operated using the display buttons as follows:

Table 8-1 Inverter operation using the display buttons

I	"Inverter On"
O	"Inverter Off"
	The "Inverter On" and "Inverter Off" functions are only active if you select "Local Mode".

▲ ▼	Use the <down arrow> and <up arrow> buttons to navigate around the menu.
	You specify the speed setpoint by pressing the buttons twice. This function is only active if the setpoint has been set in the configuration.
	Use these buttons as well to select individual actual values such as, e.g. "n-Motor".
I	You reach the actual values menu by pressing this button.
↵	Press the <ENTER> button to change to a submenu.
S	If you press the <S> button, you return to the status display with the actual values.
S I	Acknowledge pending errors by pressing the <S+I> buttons simultaneously.
P	Press <P> to reach the parameters menu.

8.1.2 Switching the unit on and off

Read the information in section "Safety instructions" (Page 13) before you switch on the unit.

⚠ WARNING

Automatic startup

Depending on parameter settings and connection of external control devices, the inverter can start up automatically when the line voltage is connected. The motor and coupled machine can start moving unexpectedly. This can result in death, serious injury or material damage.

Confirm whether or not your system is capable of automatic starting and, if appropriate, take measures to ensure personal safety and operational readiness at the driven machine.

Startup

1. If your inverter is supplied with an external control voltage from external or auxiliary power sources, switch this supply on first.
2. Switch on the line voltage.
3. Start up the inverter using the control command <On> or input the On command via an external control device (if one is connected).

Shutdown

1. Stop the inverter using the control command <Off> or input the Off command via an external control device (if one is connected).
2. If you want to isolate the inverter, then disconnect the line supply and any connected external or auxiliary power sources.

8.1.3 Setting the language

The inverter provides two display languages.

1. Press <S> for approx. 2 seconds to switch the display language.
2. Press <S> again for approx. 2 seconds to switch back to the original display language.

You can download further display languages using the PC tool "IMS":

1. Launch the PC tool "IMS" and connect the inverter to the PC.
2. Select a language using the software "IMS" under "Online functions, Transfer language...".

Note

Loss of a display language

Every new display language transmitted to the inverter overwrites one of the existing languages.

8.1.4 Setting the date and time

An accurate device time setting makes it easier to troubleshoot later.
Faults which occur during operation are stored in an event log with date and time of day.
Set the current date and time under "P-EXTRAS/Date" and "Time" respectively.

- The current time of the testing date is set as CET at the factory.
- Winter and Summer time are not taken into account.

8.1.5 Setting the level of detail of the inverter menu

Set the level of detail of the inverter menu in the menu "P-EXTRAS" to change the number of visible menus and parameters and to increase the display clarity.

8.1.6 Inverter operating commands

The inverter is operated using various inputs, such as, e.g. control cable terminal block inputs, Profibus control words, signal generators etc. Further information can be found under "Configuring operating sources" (Page 83).

The commands have the following functions:

- "Controller release
  The power section in the inverterconsisting of IGBTs, is only active when controller release is activated. As well as the options for releasing the controller by software, control cable terminal –A1-X2:8 must also be energized. If you deactivate this function, the output semiconductor is blocked immediately and the motor coasts to a stop.
- "Speed ON"
  Use this command for controlled shutdown of a motor. The motor passes through a brake ramp during shutdown. The inverter is ready immediately for a restart after the braking.
- "Reset"
  Acknowledge a queued error using the command "Reset". The inverter also includes a shutdown with the functions "Emerg. stop (NC)" or "Off1" and "Off2".
- "Off1 (NC)" and "Off2 (NC)"
  - Perform a controlled braking with the command "Off1". This command is initiated by software. Perform an immediate block with the command "Off2". An optional main contactor drops out. Reset the inverter before restarting using the command "Reset". The inverter must be preloaded during the restart.
  - The actuation via the control cable terminal block of "Off1" and "Off2" is made using an NC (normally closed) contact.
- "Emerg. stop (NC) OFF3"
  - Perform a controlled braking on the "fast stop brake ramp" with the command "Off3". This command is initiated by software. The inverter shuts down after the braking. An optional main contactor drops out. Reset the inverter before restarting using the command "Reset".
  - The actuation via the control cable terminal block of "Fast stop (NC)" is made via an NC contact.
    This function is not safety-related in the sense of EN 954-1. If you must realize a safety-relevant function "Emerg. stop" according to IEC/EN 60204, stop category one, then control this input and a main contactor via an appropriate safety relay, e.g. type 3TK2827... from Siemens.

    WARNING

    Non-safety-related function "Fast stop (NC) OFF3"

    If you use the "Fast stop (NC) OFF3" function without additional safety relay in the input and for a main contactor, then the motor will not be shut down safely. This can result in death, serious injury or material damage.

    Use a safety relay for input and main contactor, e.g. type 3TK2827..., for a "Fast stop" safety-related function according to IEC/EN 60204, stop category one.
- "int.ctr.inhib."
  If you have realized the operating functions using controls, e.g. ON / OFF button, this command causes a shutdown using controller lock without deactivating the controls. No new ON command is necessary for the restart.

- "int. speed off"
  This command has the same function as "int.ctr.inhib.", however cause a controlled braking to zero speed. All controls are maintained.
- "Reversing"
  - In the menu item "P-DRIVE DATA/Rotation =", if you enter the value "both", you can then activate the command "Reversing". When activated, the inverter changes the output rotary field. In doing so, the motor is braked in a controlled way on the brake ramp to zero speed. Afterwards, it is accelerated to the configured setpoint value in the opposite direction. If the value "both" is not set, the drive goes to the configured minimum speed.
  - If the drive does not start despite the presence of setpoint value and operating commands, check whether the reverse function is activated and at the same time only one rotation direction is enabled.
- "Motor potentiometer"
  Similarly to a mechanical motor potentiometer, you can change the setpoint value using the <up arrow> and <down arrow> buttons. The position of the motor potentiometer is stored in the case of power failure.

8.1.7 Configuring operating sources

- Assign the functions mentioned above to the desired operating source.
  - You can configure operating sources for "Local", using internal display, "Remote", using control cable terminal block –X2 and "BUS", e.g. Profibus or RS 485, via the PC.
- Configure your selection for the On/Off commands with the command "Op.-source" in the menu "P-INTERFACE\Op.-source" .
- If you would like to switch between "Local" and "Remote", then invoke the changeover using a finished configuration under "P-OPERATION/Opr." or change the setting "P-PARAMETER SWITCH".
- Select the Reset source for the Reset command under "P-INTERFACE" .
  - If you would like to activate the reset independently of the operating source changeover, then set "Global". The reset is then possible at all operating sources.

8.1.8 Invoking mode configurations

Invoke the finished operating configurations under "P-OPERATION/Opr.". Settings for the controls and the parameter switches are automatically made in these configurations.

For each selection, there is an associated connection plan and a specified mode of functioning of the display buttons and digital inputs. Further information can be found in the "Standard mode settings" (Page 87) section.

Changes in the menu "P-OPERATION/" cause under "P-OPERATION/Opr." the addition "special" as information that something has been changed from the standard.

8.1.9 Communication Options

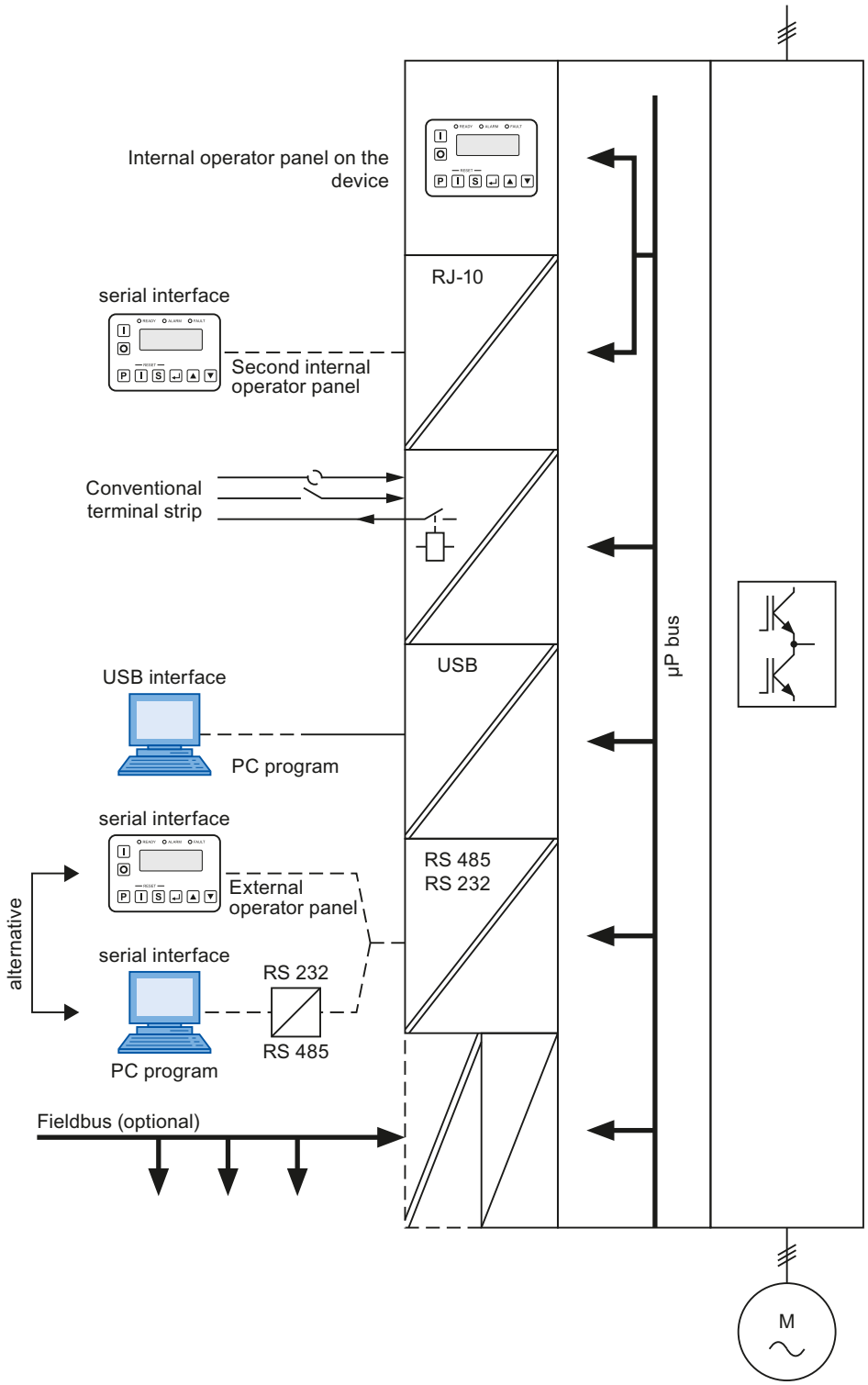

Figure 8-2 Communication Options

8.1.10 Meaning of the abbreviations for operating functions

The following abbreviations exist for the operating options of "Controller block" and "Speed On" via display or control cable terminal block:

- "siss"
- "sisd"
- "dids"
- "didd"

The letters have the following meanings:

- "s" designates the static setting. The default for "On" us performed via a permanent contact.
- "d" designates the dynamic setting. The defaults for "On" and "Off" are performed via an On-button or Off-button.
- "i" designates the internal display. The operation is performed using the <On> and <Off> buttons.

The individual positions in the abbreviation have the following meaning:

1. position: Controller block for "local", e.g. "s" for static via control cable terminal block
2. position: Speed On for "local", e.g. "i" for internal display via <On> and <Off> buttons
3. position: Controller block for "remote", e.g. "s" for static via terminal block
4. position: Speed On for "remote", e.g. "d" for dynamic via control cable terminal block

You can change the operating source from "local", i.e. the inverter display, to "remote", i.e. the control cable terminal block –X2. To do this, apply a voltage of 24 V to the terminal -X2:12.

The mode settings "NAMUR 1" to "NAMUR 6" designate the different variations of the operation options according to the NAMUR specification.

8.1.11 Function of "P-Profibus/Modbus"

Using the "P-Profibus/Modbus" function, you select basic Profibus or Modbus settings such as, e.g. bus address and PPO type.

"Reaction" and "Time-out t" mean how and after which time the inverter reacts to an interruption of the Profibus or Modbus.

Further information can be found in section "Profibus DP" (Page 148) or "Modbus RTU" (Page 150).

8.1.12 Function of "P-DIGITAL OUTPUTS"

The inverter provides at least four relays and two LEDs. In the "P-DIGITAL OUTPUTS" menu, you can select the signal which should actuate the respective relay or LED from a list ("Bitpool"). More outputs might be available depending on the variants and quantity of installed power sections.

8.1.13 Function of "P-ANALOG OUTPUTS"

The inverter has two electrically isolated analog outputs. Depending on the type of connected measuring instrument, the output signal is automatically set to a +20 mA current source or to a +10 V voltage source. Input the following in the "P-ANALOG OUTPUTS" menu:

- Which signals should be output?
- What is the full scale value of your display instrument?
- Should a 4 mA addition or a different value be added?
- Should a center point increase be output for the presentation of bipolar signals?

8.1.14 Operation of several inverters on one PC

It is possible to actuate several inverters simultaneously with one PC using the PC tool "IMS". You can select the communication interfaces Ethernet, Profibus, Modbus or RS 485 . In all cases, you need a converter for the relevant network RS 485, Modbus or Profibus on the PC with the PC tool "IMS".

If you create the network using Profibus or Modbus, you will also need the option "Profibus" or "Modbus", as described in the corresponding sections.

Further information about the operation of several inverters on one PC can be found in the PC tool "IMS". A communication network based on RS 485 limits the network to a further 63 nodes.

8.2 Standard mode settings

8.2.1 Mode "std siss"

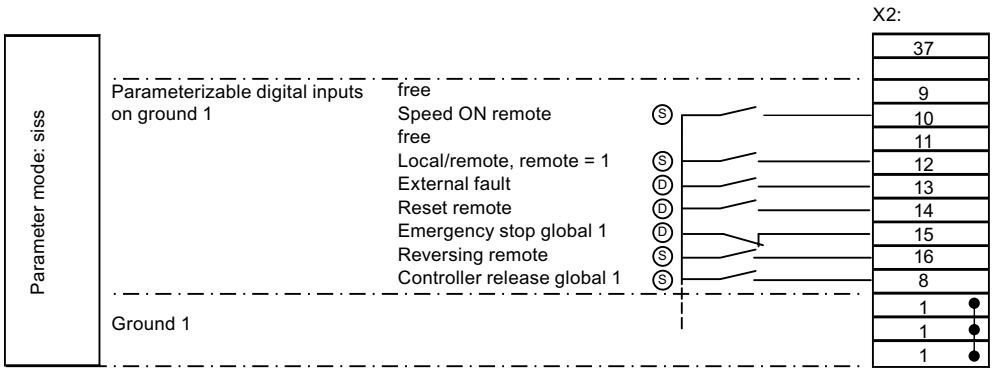

(D) Dynamic: Pushbutton mode

(S) Static: Switch mode

Figure 8-3 Assignment of the control cable terminals for "std siss" mode

Control behavior for "Local" (dynamic)

- Enter the command "Speed On" and "Speed Off" using the <On> and <Off> buttons on the display.
- Make the setpoint value setting using the <down arrow> and <up arrow> buttons.
- Reset errors by pressing the buttons <S+I> simultaneously.

Control behavior for "Remote" (static)

- Control the operation of "Speed on" with a switch at –X2:10.
- Enter the setpoint via control cable terminal block –X2 with analog setpoint value 1.
- When required use the reversing input –X2:16.

"Local" and "Remote" mode

- "Emerg. stop (NC)": If you open the contact at –X2:15, the drive decelerates down to 0 speed along the braking ramp for emergency stop. The inverter clears all self-holding functions.
- "Reset" (NO): Reset errors and "Emerg. stop" using a 24 V pulse at –X2:14.
- "Controller release, static " (NC) -X2:8: Enable the inverter using a permanent contact. The drive coasts to a stop if you open the contact. The inverter clears all self-holding functions.

8.2.2 Mode "std sisd"

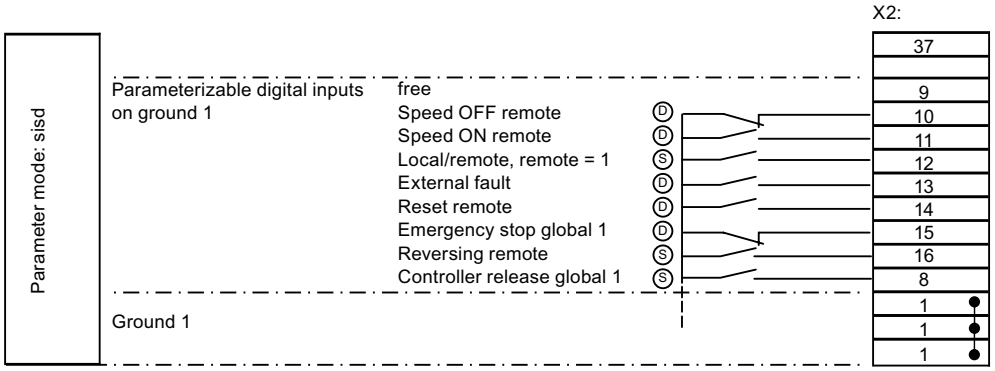

(D) Dynamic: Pushbutton mode

(S) Static: Switch mode

Figure 8-4 Assignment of the control cable terminals for operation of "std sisd"

Operation different from "std siss"

The operation "Speed On" for "Remote" mode is dynamic.

Start the drive with an NO (normally open) contact at –X2:11. You change the inverter speed to 0 with an NC (normally closed) contact at -X2:10.

8.2.3 Mode "std dids"

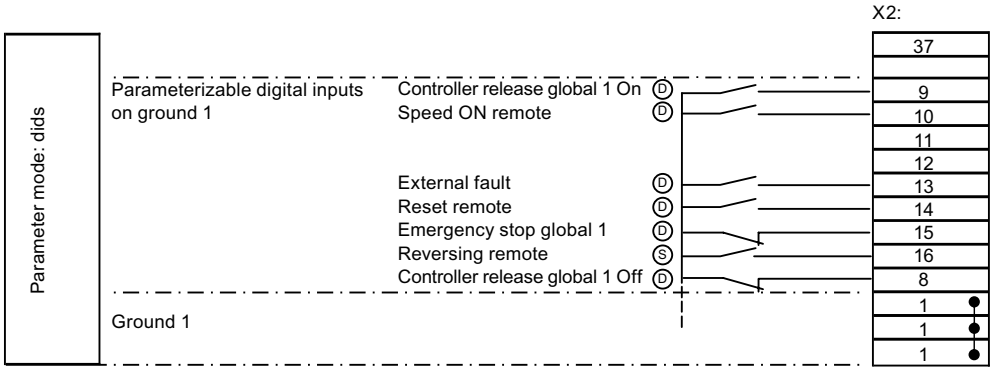

(D) Dynamic: Pushbutton mode

(S) Static: Switch mode

Figure 8-5 Assignment of the control cable terminals for "std dids" mode

Control behavior for "Local" (dynamic)

- Enter the command "Speed On" and "Speed Off" using the <On> and <Off> buttons on the display.
- Make the setpoint value setting using the <down arrow> and <up arrow> buttons.
- Reset errors by pressing the buttons <S+I> simultaneously.

Control behavior for "Remote" (static)

- Control the operation of "Speed on" with a switch at -X2:10. Enter the setpoint via control cable terminal block -X2 with analog setpoint value 1.
- When required use the reversing input -X2:16.

"Local" and "Remote" mode

- "Emerg. stop (NC)": If you open the contact at -X2:15, the drive decelerates down to 0 speed along the braking ramp for emergency stop. The inverter clears all self-holding functions.
- "Reset" (NO): Reset errors and "Fast stop" using a 24 V pulse at -X2:14.
- "Controller release dynamic". Enable the inverter using a normally open contact at -X2:9. The drive coasts to a stop if you open the contact at -X2:8. The inverter clears all self-holding functions.

8.2.4 Mode "std didd"

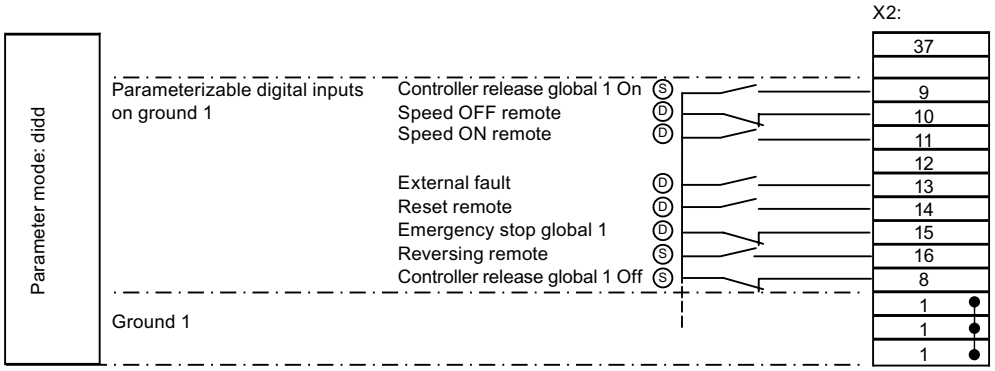

(D) Dynamic: Pushbutton mode

(S) Static: Switch mode

Figure 8-6 Assignment of the control cable terminals for "std didd" mode

Operation different from "std dids"

The operation "Speed On" for "Remote" mode is dynamic.

Start the drive with an NO (normally open) contact at -X2:11. Change the inverter speed to 0 with an NC (normally closed) contact at -X2:10.

8.3 NAMUR mode settings

8.3.1 Operation according to NAMUR defaults

If you activate the control cable terminal -X2:9 with 24 V, then the operating source and the setpoint input are switched from "Test" to "Normal" using a parameter switch.

You can connect the up and down buttons of a motor potentiometer function to control cable terminals -X2:12 and -X2:13. If you would like to use the motor potentiometer, you must also under "P-PARAMETER SWITCH/AV" change the setting of bit "AI 1" for analog setpoint value 1 to "MPoti". The motor potentiometer function is now valid in "Normal" mode and not valid in test mode.

"Reset" (NO): Reset errors and "Emerg. stop" using a 24 V pulse at –X2:14.

8.3.2 Operation according to "NAMUR 1"

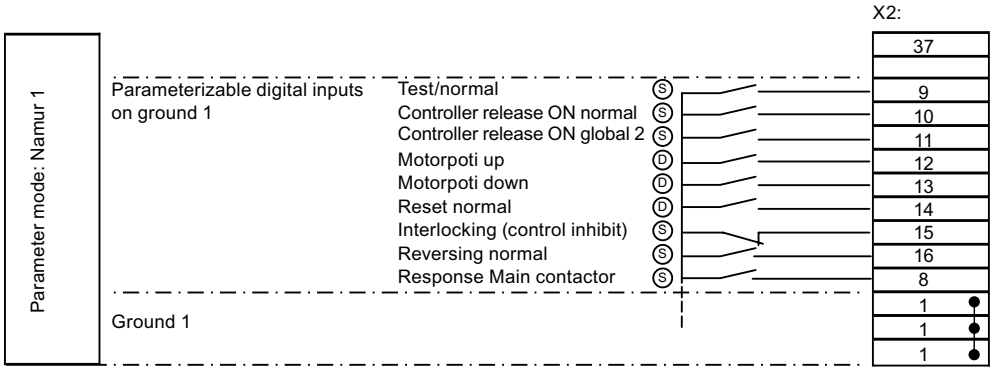

(D) Dynamic: Pushbutton mode

(S) Static: Switch mode

Figure 8-7 Assignment of the control cable terminals for "NAMUR 1" mode

Control behavior for "test" (dynamic)

- Enter the command "Controller release" and "CTRL.OFF" using the <On> and <Off> buttons on the display.
- Make the setpoint value setting using the <down arrow> and <up arrow> buttons.
- Reset errors by pressing the buttons <S+I> simultaneously. The locking and the OUT input on the control cable terminal block reset the control.

Control behavior for "normal" (static)

- Control the operation of the controller release with a switch (NO) at -X2:10. Enter the setpoint via control cable terminal block -X2 with analog setpoint value 1.
- When required use the reversing input (NO) -X2:16.

"Test" and "Normal" mode

- "Interlocking" (NC): The controller inhibit is activated if you open the contact at -X2:15. The drive coasts to a stop and cannot be restarted. The inverter display shows the message "Interlocking".
- "Off" (NC): You activate the controller inhibit if you remove the 24 V signal at -X2:11.

8.3.3 Operation according to "NAMUR 2"

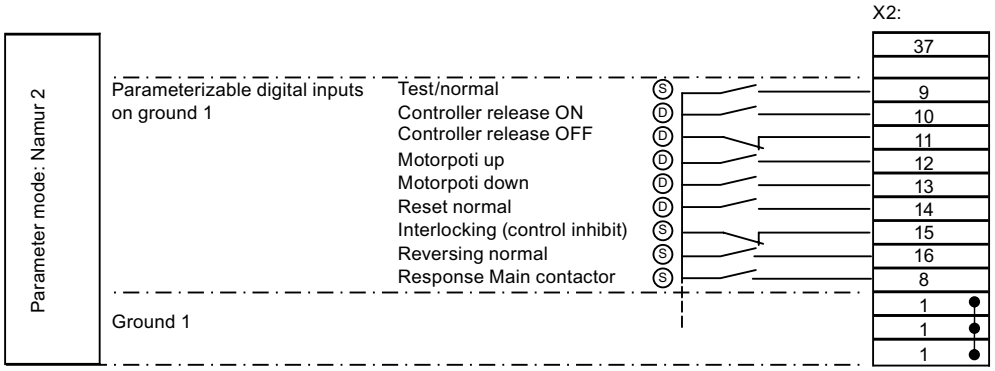

(D) Dynamic: Pushbutton mode

(S) Static: Switch mode

Figure 8-8 Assignment of the control cable terminals for "NAMUR 2" mode

Operation different from "NAMUR 1"

The operation of the controller block for "Normal mode is dynamic.

- Start the drive with an NO (normally open) contact at –X2:10.
- You inhibit the inverter with a normally closed contact at -X2:11.

8.3.4 Operation according to "NAMUR 3"

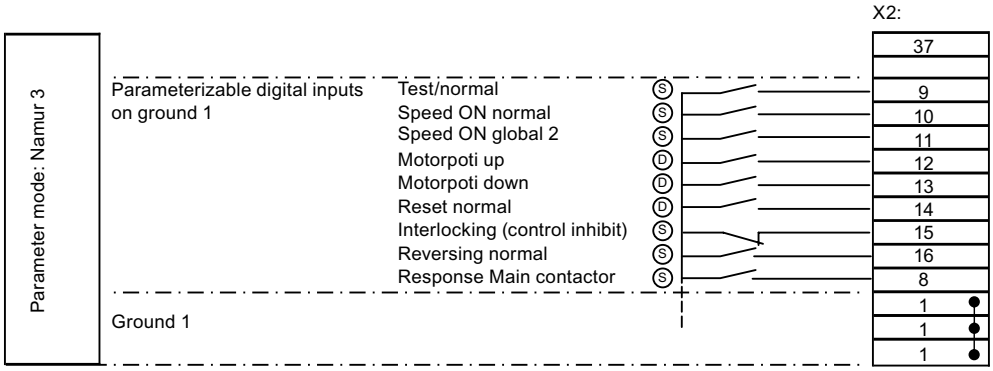

(D) Dynamic: Pushbutton mode

(S) Static: Switch mode

Figure 8-9 Assignment of the control cable terminals for "NAMUR 3" mode

Control behavior for "test" (dynamic)

- Enter the commands "Speed On" and "Speed Off" using the <On> and <Off> buttons on the display.
- Make the setpoint value setting using the <down arrow> and <up arrow> buttons.
- Reset errors by pressing the buttons <S+I> simultaneously. The locking and the OUT input on the control cable terminal block reset the control.

Control behavior for "normal" (static)

- Control the operation of the speed with a switch (NO) at -X2:10. Enter the setpoint via control cable terminal block -X2 with analog setpoint value 1.
- When required use the reversing input (NO) -X2:16.

"Test" and "Normal" mode

- "Interlocking" (NC): The controller inhibit is activated if you open the contact at -X2:15. The drive coasts to a stop and cannot be restarted. The inverter display shows the message "Interlocking".
- "Off" (NC): You issue the command for "Speed Off" if you remove the 24 V signal at -X2:10.

8.3.5 Operation according to "NAMUR 4"

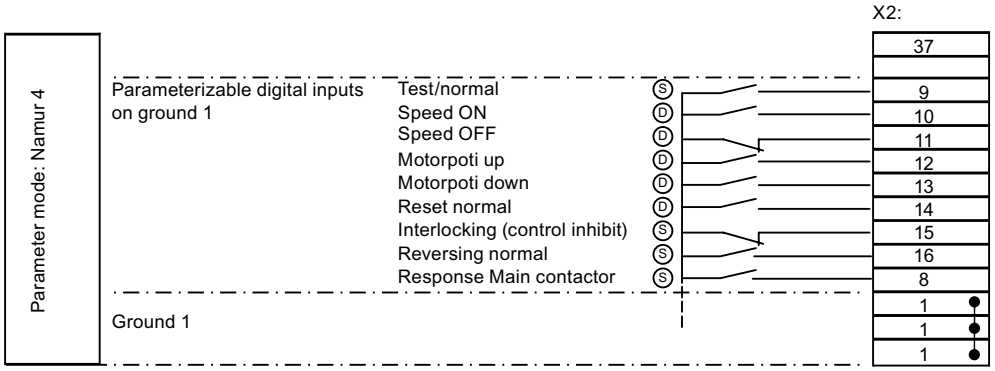

(D) Dynamic: Pushbutton mode

(S) Static: Switch mode

Figure 8-10 Assignment of the control cable terminals for "NAMUR 4" mode

Operation different from "NAMUR 3"

The operation "Speed On" for "normal" mode is dynamic.

- Start the drive with a normally open contact at -X2:10.
- Issue the command "Speed Off" with an NC contact at -X2:11.

8.3.6 Operation according to "NAMUR 5"

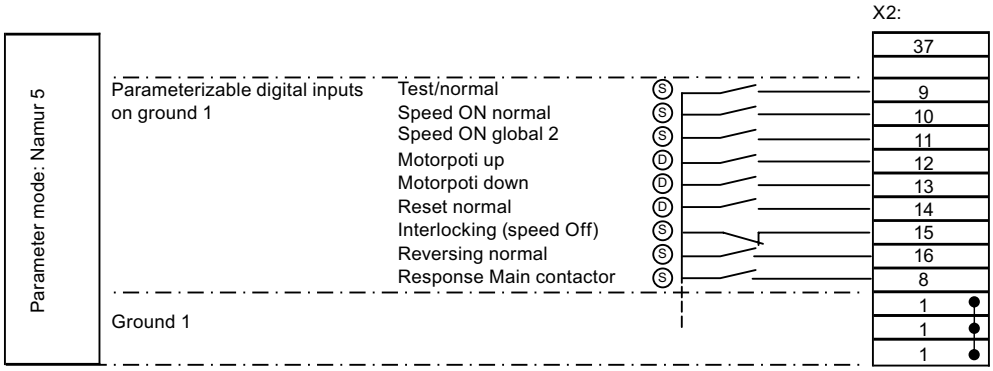

(D) Dynamic, button mode

(S) Static, switch mode

Figure 8-11 Assignment of the control cable terminals for "NAMUR 5" mode

Control behavior for "test" (dynamic)

- Enter the commands "Speed On" and "Speed Off" using the <On> and <Off> buttons on the display.
- Make the setpoint value setting using the <down arrow> and <up arrow> buttons.
- Reset errors by pressing the buttons <S+I> simultaneously.

Control behavior for "normal" (static)

- Control the operation of the speed with a switch (NO) at -X2:10. Enter the setpoint via control cable terminal block -X2 with analog setpoint value 1.
- When required use the reversing input (NO) -X2:16.

"Test" and "Normal" mode

- "Interlocking" (NC): The controller inhibit is activated if you open the contact at -X2:15. The drive coasts to a stop and cannot be restarted. The inverter display shows the message "Interlocking". If the contact is closed again, you must restart the inverter in test mode.
- "Off" (NC): You issue the command for "Speed Off" if you remove the 24 V signal at -X2:10.
- If you close the contacts "Interlocking" or "Off" again during the braking phase, the drive accelerates immediately to the configured setpoint value.

8.3.7 Operation according to "NAMUR 6"

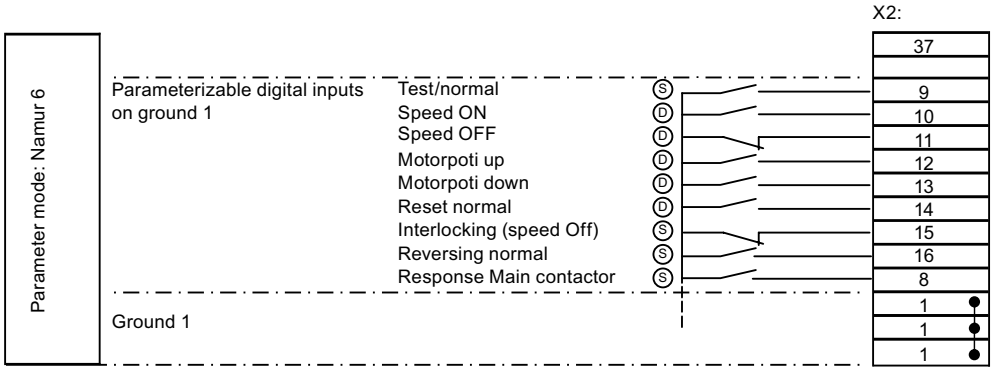

(D) Dynamic: Pushbutton mode

(S) Static: Switch mode

Figure 8-12 Assignment of the control cable terminals for "NAMUR 6" mode

Operation different from "NAMUR 5"

The operation "Speed On" for "normal" mode is dynamic.

- Start the drive with a normally open contact at -X2:10.
- Issue the command "Speed Off" with an NC contact at -X2:11.

8.4 Controlling the external connections of the inverter

8.4.1 Function of the control cable terminals

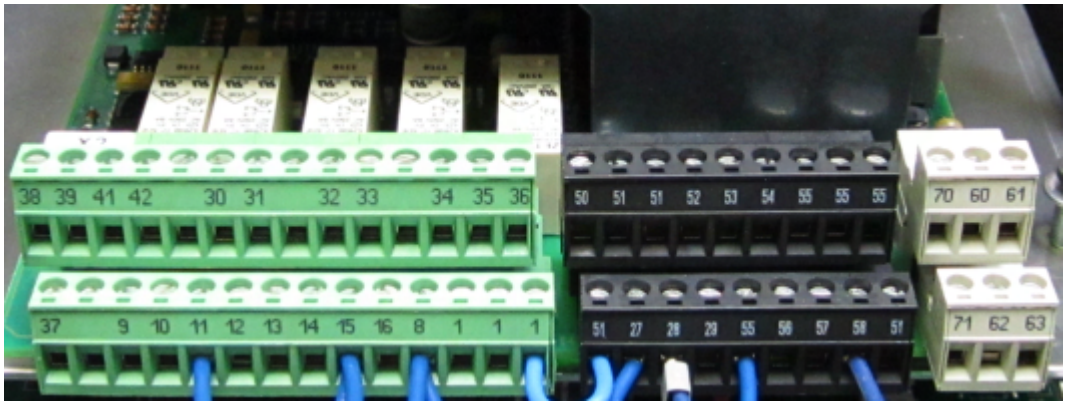

Figure 8-13 Control cable terminals

The purpose of the control cable terminals is to allow the connection of control cables for exchanging signals.
For more detailed information about the function of control cable terminals, refer to section "Standard mode settings" (Page 87). The function of the control cable terminals, with the exception of input -X2:8 for hardware shutdown, is dependent on the parameterization.

8.4.2 Protective separation according to EN 61800-5-1

WARNING

High voltages

If you connect up peripheral devices which do not conform to this insulation concept, equipment damage might occur as a result of inadequate insulation. This can result in death, serious injury or material damage.

Connect devices and cables to the control cable terminals only if they conform to the relevant voltage class (DVC) described in this section.

Control and power circuits have protective separation between them according to EN 61800-5-1. The following graphics show the principle structure:

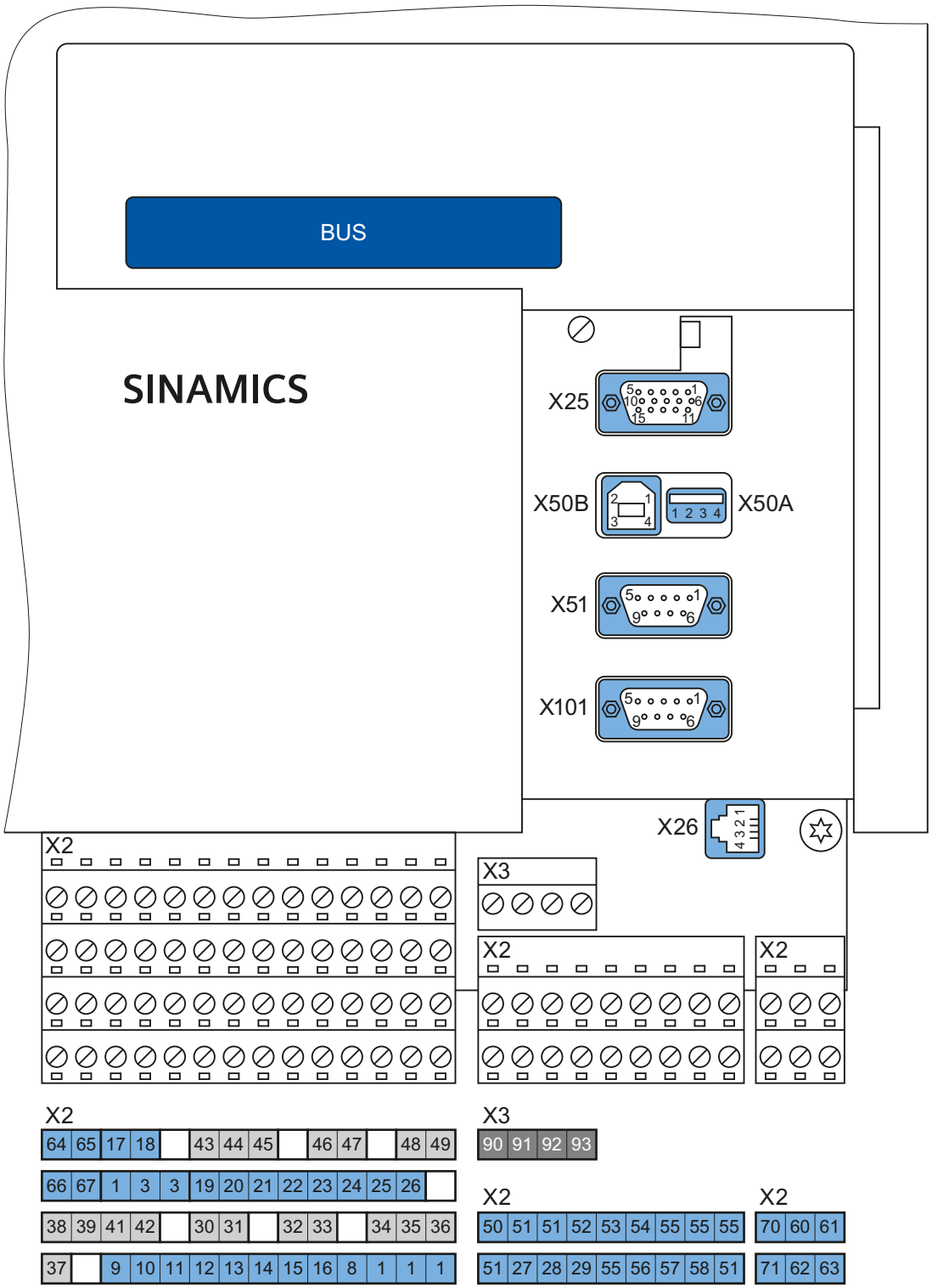

Figure 8-14 Overview of external connections and voltage classes

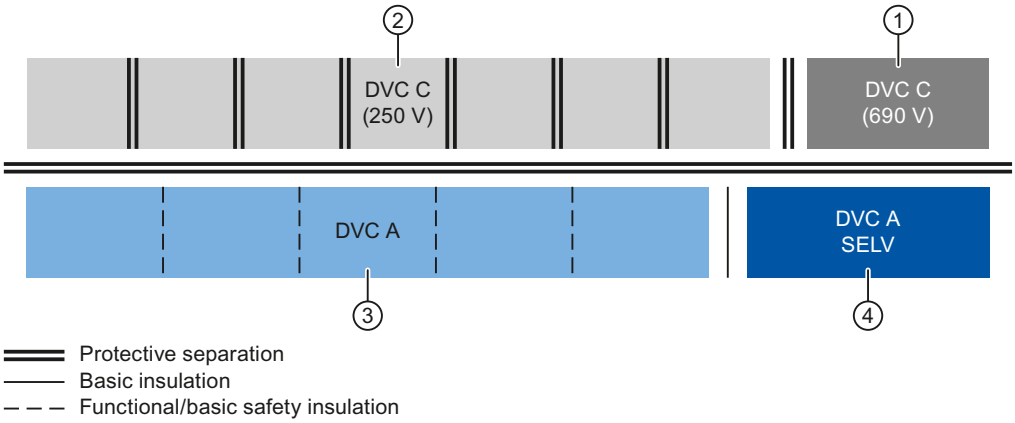

①	Potential for output (PTC) (X3) max. 690 V	DVC C
②	Potential for digital outputs (X2:37-42) max. 250 V	DVC C
	Potential for digital outputs (X2:30,31) max. 250 V	DVC C
	Potential for digital outputs (X2:32,33) max. 250 V	DVC C
	Potential for digital outputs (X2:34-36) max. 250 V	DVC C
	Potential for digital outputs (X2:43-45) max. 250 V	DVC C
	Potential for digital outputs (X2:46-47) max. 250 V	DVC C
	Potential for digital outputs (X2:48-49) max. 250 V	DVC C
③	Potential for digital inputs (X2:1-26)	DVC A
	Potential for ETV (ETV = input isolating amplifier, analog inputs X2:27-29,50-58, HTL tachometer X101)	DVC A
	Potential for ATV (output isolating amplifier, analog outputs X2:60-67,70-71)	DVC A
	Potential for control electronics/CB08 (inverter electronics, ext. display X26, SinCos tachometer X25, USB-A X50A, USB-B X50B)	DVC A
	Potential for RS485 (ext. display/RS232 X51)	DVC A
④	potentialSELV, Sicherheitskleinspannung nach EN 60950-1 (BUS-Platinen)	DVC A

Figure 8-15 Insulation concept

DVC (Decisive Voltage Class) is the classification of the voltage range used to determine protective measures against electric shock hazards

Table 8-2 DVC limits as defined by DIN EN 61800-5-1

DVC	Working voltage limits		
	Alternating voltage (rms value)	Alternating voltage (peak value)	Direct voltage (average value)
A	25 V	35.4 V	60 V
B	50 V	71 V	120 V
C	1.000 V	4.500 V	1.500 V
D	> 1.000 V	> 4.500 V	> 1.500 V

For more detailed information about control cable terminals, please refer to section "Technical data of control cable terminals" (Page 176).

8.4.3 Sub-D and USB connections and DIL switches

The following illustration clarifies the position of the Sub-D connections and DIL switches.

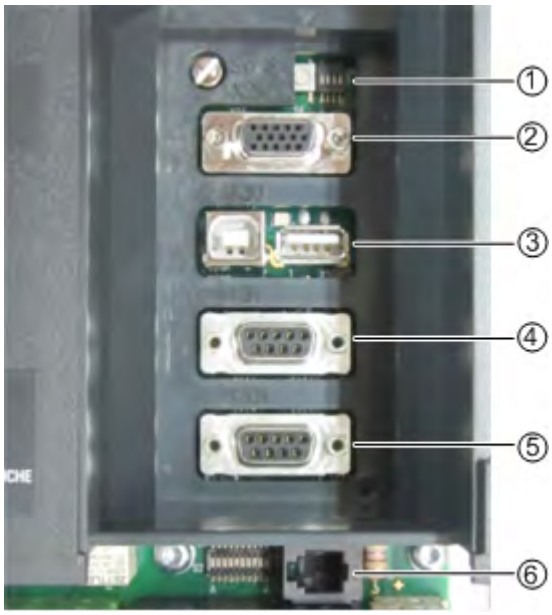

① S1.1 … S1.4: Hardware setting

② X25: SIN-COS/TTL speed encoder

③ X50B: USB for PC with software "IMS"
X50A: HOST-USB interface, exclusively for USB sticks. Function not yet implemented.

④ X51: RS 485 for an external operator panel. In addition, it is also possible to communicate at this interface via RS 232 , e.g. with "IMS".

⑤ X101: HTL speed encoder

⑥ X26: Additional RS 485interface, not isolated. This is the standard interface for connecting the external operator panel (for local installation in the cabinet door only).

Figure 8-16 Interfaces at the inverter

8.4.4 USB interface

⚠ CAUTION

Non-isolated USB interfaces

The USB interfaces X50A and X50B are not isolated. The connection of a grounded device can cause an equipment or inverter defect and consequentially pose the risk of physical injury.

Devices that are connected, e.g. laptop with IMS, must have basic insulation between the USB interface and ground. In this case, the devices must offer this option, e.g. suitable for battery operation or the original power supply without ground connection.

NOTICE
No supply with a power source of limited output When the connected device is overloaded, the USB interface can develop defects. The equipment will be damaged as a result. The USB interface is a service interface only and not a general IT data interface in accordance with standard IEC/EN/UL 60950-1.

8.4.5 DIL switches "S1" and "S2"

Switch "S1"

Table 8-3 Functions - DIL switch "S1"

Switch	Function	Factory setting
S1:1	ON: configuration possible OFF: parameterization blocked	1
S1:2	ON: general fault in the open-circuit principle, OFF: General fault in the closed-circuit principle, control cable terminals -2:34 … 36	0
S1:3	ON: Complete initialization in conjunction with S1:4 = ON OFF:	0
S1:4	ON:Flashing: OFF:	1

Switch S1:6 is not equipped.

Switch "S2"

① Gray cover
② -X26 for an external operator panel
③ Control cable terminal block -X2

Figure 8-17 DIL switch "S2"

The first four switches, S2: 1 / 2 / 3 / 4, define the voltage range for analog input 2, control cable terminal -X2:54:

Table 8-4 DIL switch "S2" - can be used to set the voltage range

S2: 1 2 3 4	Voltage range -X2:54
0 0 0 1	0 V … ± 250 V
0 0 1 0	0 V … ± 132 V
0 1 0 0	0 V … ± 72 V
1 0 0 0	0 V … ± 50 V
0 0 0 0	0 V … ± 10 V

Switch S2: 5 / 6 / 7 configures the analog input AI 2 as a current/voltage input, PTC thermistor input, KTY84-130 input or PT100 input.

Table 8-5 DIL switch "S2" - possible settings for AI 2

S2: 5 6 7	Function	Control cable terminal
1 X 0	Current input	-X2:53 - -X2:51
0 0 0	PTC thermistor input	-X2:53 - -X2:51
0 1 0	KTY84 130 input	-X2:53 - -X2:51
0 1 1	PT100 input	-X2:53 - -X2:51
X X X	Voltage input	-X2:54 - -X2:51

Switch S2: 8 / 9 / 10 configures the analog input AI 1 as a current/voltage input, PTC thermistor input, KTY84-130 input or PT100 input.

Table 8-6 DIL switch "S2" - possible settings for AI 1

S2: 8 9 10	Function	Control cable terminal
1 X 0	Current input	-X2:50 - -X2:51
0 0 0	PTC thermistor input	-X2:50 - -X2:51
0 1 0	KTY84 130 input	-X2:50 - -X2:51
0 1 1	PT100 input	-X2:50 - -X2:51
X X X	Voltage input, only 0 V ... ± 10 V	-X2:52 - -X2:51

8.4.6 Connecting encoders

An encoder is required for field-oriented control only, the standard control works without an encoder.

Note

Unwanted operating state

If you do not connect up the encoder cables correctly, the loss of the encoder signal can give rise to unwanted operating states in the inverter control system.

Connecting a sincos encoder to -X25

All encoder signals have a voltage level of 1 $V_{SS.}$

The encoder connection on the motor side is designed as a socket. For this version, the manufacturer provides a complete encoder cable, e.g. ERN 387 from the company Heidenhain, Item No. 0278599 with a length of 10 meters. You can also purchase an adapter cable, Item No. 0278581. Ask the inverter manufacturer about other encoder cables.

The encoder connection on the inverter side is designed as a socket.

- Only use this encoder for field-oriented control with a speed accuracy < 1 %.
- Connect the encoder mechanically rigid to the motor.

- Do not place any gearbox between encoder and motor.

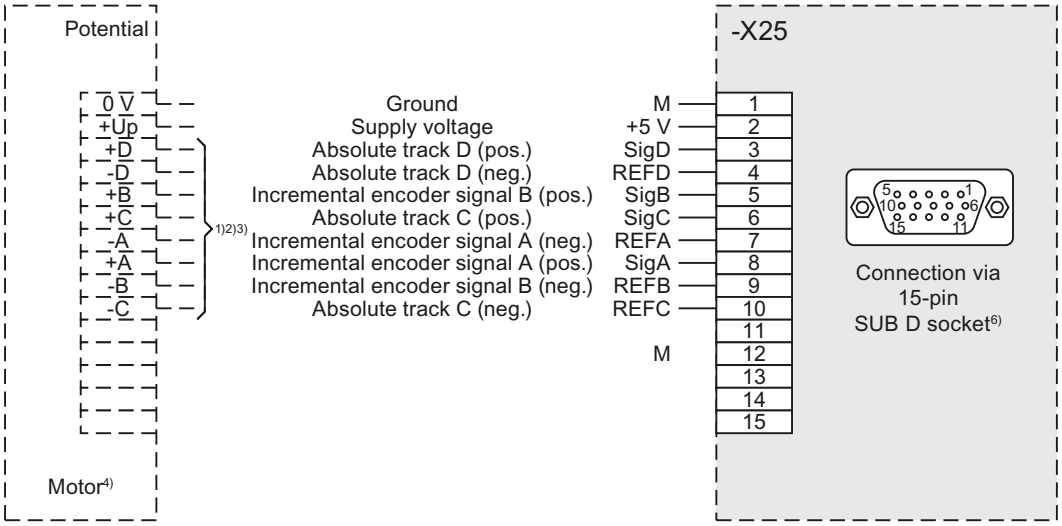

Figure 8-18 Sincos encoder at -X25

- Use twisted pair cables for the same encoder tracks, e.g. A + / A -.
- Lay the cable shield on both sides at the encoder and inverter connector.

Connecting a TTL encoder to -X25

All encoder signals have a voltage level compliant with RS 422.

The encoder connection on the inverter side is a high density socket.

- Only use this encoder for field-oriented control with a speed accuracy < 1 %.
- Connect the encoder mechanically rigid to the motor.
- Do not place any gearbox between encoder and motor.

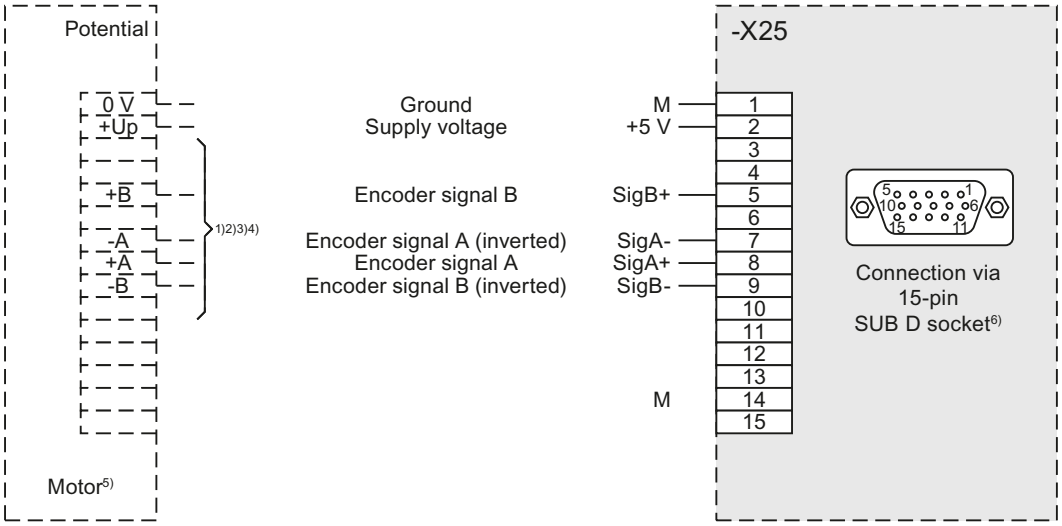

Figure 8-19 TTL encoder at -X25

- Use twisted pair cables for the same encoder tracks, e.g. A + / A -, B + / B -.
- Lay the cable shield on both sides at the encoder and inverter connector.

Connecting an HTL encoder at -X101

- Only use this encoder for field-oriented control with a speed accuracy < 1 %.
- Connect the encoder mechanically rigid to the motor.
- Do not place any gearbox between encoder and motor.

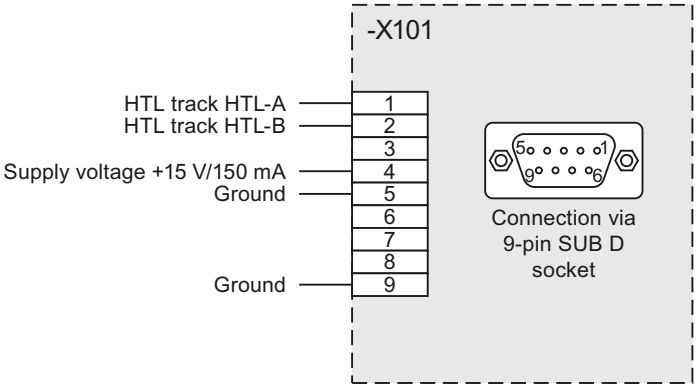

Figure 8-20 HTL encoder at -X101

- In the case of making your own encoder cables, only lay the shield on the inverter side.

8.4.7 Connect the PC via USB at -X50B

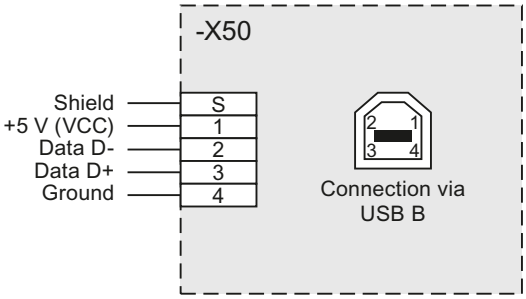

Figure 8-21 PC at -X50B via USB

Connect the USB- port -X50B with a USBport on your notebook. Use a standard cable that is not longer than 3 m.

CAUTION

Personal injuries caused by a defective unit orinverter

Read the connection instructions given in section "Electrical isolation of USB interfaces" (Page 100) and "Safe isolation in accordance with EN 61800-5-1" (Page 97).

The version of the installed IMS software must be "Z24" or higher. The USB connection feature is not available in earlier versions.

In the menu "Options/drivers" select theUSB driver.

8.4.8 Connecting a PC to -X51 via RS 232

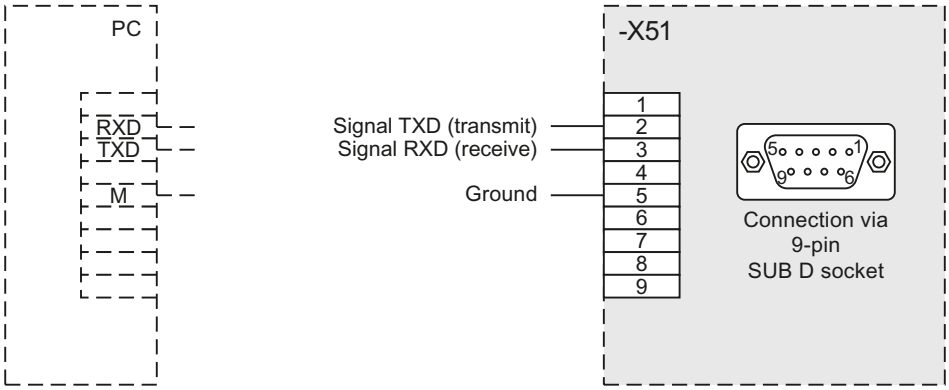

Figure 8-22 PC at -X51 via RS 232

NOTICE
Damage to the inverter electronics or the PC.
The pins of socket -X51 are assigned signals other than those shown here. Do not use a standard cable that is completely assigned, as otherwise the inverter electronics or the PC could be damaged. Only use cables where only the required pins are assigned.

Further information about connecting PC and inverter, etc. can be found in the help in the software "IMS".

- Connect the cable shield on both sides on the Sub-D9 case.

If you would like to use the software "IMS" to change the inverterparameters, the parameter "P-INTERFACE/Para-Source" must be set to "Global" or "RS232" . "Global" is the default.

- Using the "IMS" software, configure which COM port the cable on the PC will be connected to.
  - The default setting is COM1.
- Select the configuration under "Options/Drivers/RS232-485-Driver" .

8.4.9 Connection for optional external display with RS 485

You have the option of connecting an external display at -X26 or at -X51. You can take the connection assignment for an external display with RS 485 from the following diagrams.

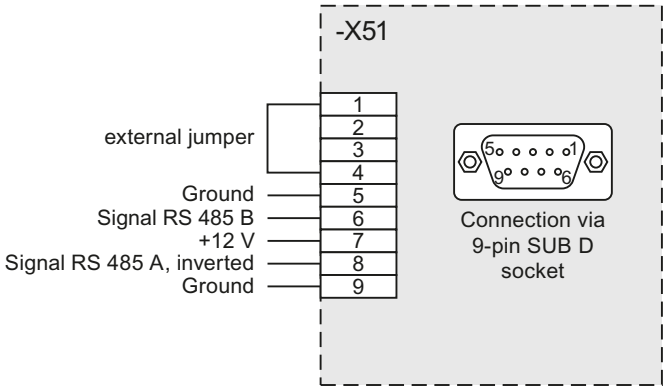

Figure 8-23 External display connected at -X51

In order to be able to issue commands via an external display connected at -X51 to the inverter , set the corresponding command source in the parameter assignment to "RS 485".

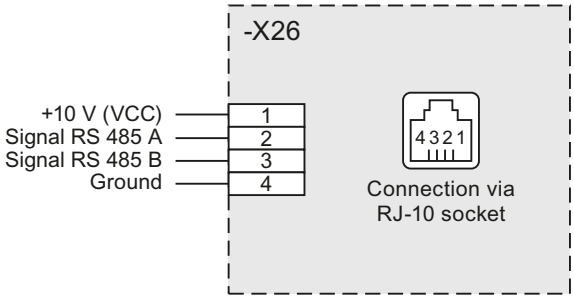

Figure 8-24 External display connected at -X26

The interface -X26 is only suitable for locally installing an external display, for instance in the cabinet door.

In order to be able to issue commands via an external display connected at -X26 to the inverter , set the corresponding command source in the parameter assignment to "intern".

8.5 Special functions

8.5.1 Protective functions

Main contactor

If you install a main contactor in your application, this can be controlled using the inverter software.

In this case, the coil is controlled via a digital output. Feedback from the normally open contact of the main contactor is realized via digital input -X2:8.

You can provide the main contactor on the mains power side, NS in short, or on the motor side, MS in short. The "P-INV. BEHAVIOUR/MCfunc" parameter specifies when the main contactor will be switched and where the main contactor must be installed.

Example: Shutdown only in the case of an error, installation on the mains power or motor side.

The following settings are possible:

Table 8-7 Contactor functions for different parameters

	The protection is ON for ...			
"MCfunc"	"FAULT"	"OFF 1"	"Controller release no internal controller voltage	"Speed On no internal speed off
NS minor fault	No	-	-	-
NS ready for operation	No	No	-	-
NS Operation enable	No	No	Yes	-
NS Operation	No	No	Yes	Yes
MS minor fault	No	-	-	-
MS ready for operation	No	No	-	-
MS operation enable	No	No	Yes	-
MS operation	No	No	Yes	Yes

Line contactor

The inverter controls its own line contactor. Note that the supply voltage for the control electronics is tapped before the main contactor. Further information can be found in the section

"Connecting external control voltage for compact devices" (Page 68) Perform the wiring in accordance with the following plan:

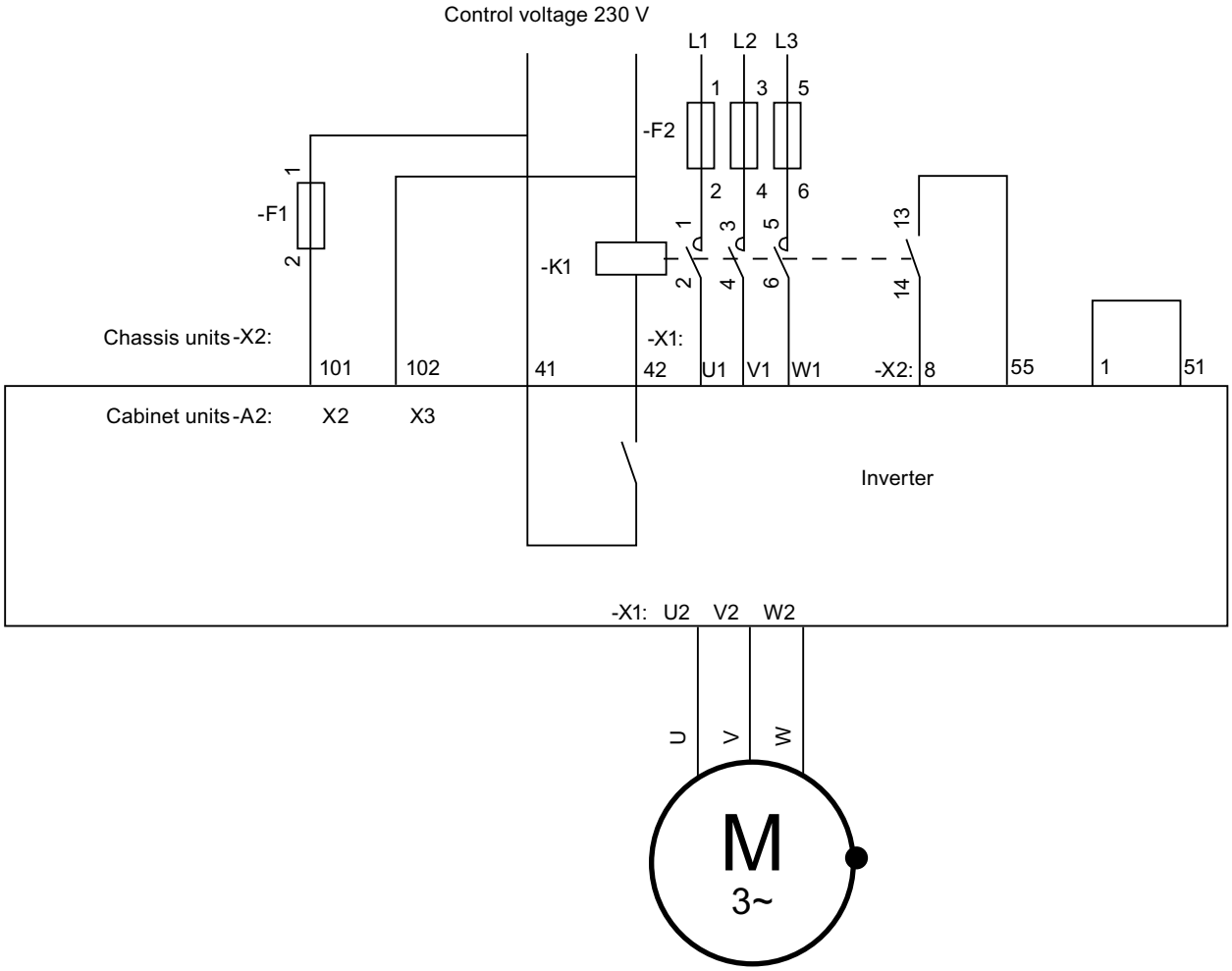

Figure 8-25 Line contactor function

Table 8-8 Line contactor functions

Terminal / component	Function
-F1	External control voltage fuse protection
-F2	Inverter output section fuse protection
-K1	Input side main contactor Design recommendation: AC1 current of the contactor is at least the inverter input current
101, 102	External control voltage for the 230 V inverter
41, 42	Digital output for the main contactor control
U1, V1, W1	Mains power connection switched via main contactor
8	Main contactor feedback input
55	24 V DC supply voltage

Terminal / component	Function
1, 51	Jumper for ground connection
U2, V2, W2	Motor connection

NOTICE
Coil currents in excess of 1 A at contact 41/42 If you load the contact 41/42 with coil currents of more than 1 A, the contact can be destroyed. In the case of coil currents of more than 1 A, connect an auxiliary relay between terminal 41/42 and the main contactor coil.

Make the following settings in order to activate the main contactor function:

- The preselection for the inputs/outputs for the control must be as follows:
  - "P-DRIVE DATA/A=Namur" or
  - "P-DIGITAL OUTPUTS/Relay 2=MainCntctr" and "P-OPERATION/Feedb.MC=X2:8"
- For "P-INV. BEHAVIOUR/MCfunc" the setting "LinC…" must be input.

Motor contactor

The inverter controls the contactor at the inverter output.

- Perform the activation as for the line contactor.
- Different than for the line contactor, for "P-INV. BEHAVIOUR/MCfunc" as value select the parameters that have "MS" as prefix for motor contactor.

- Dimension the output side contactor according to the AC3 current.
- Perform the wiring in accordance with the following plan:

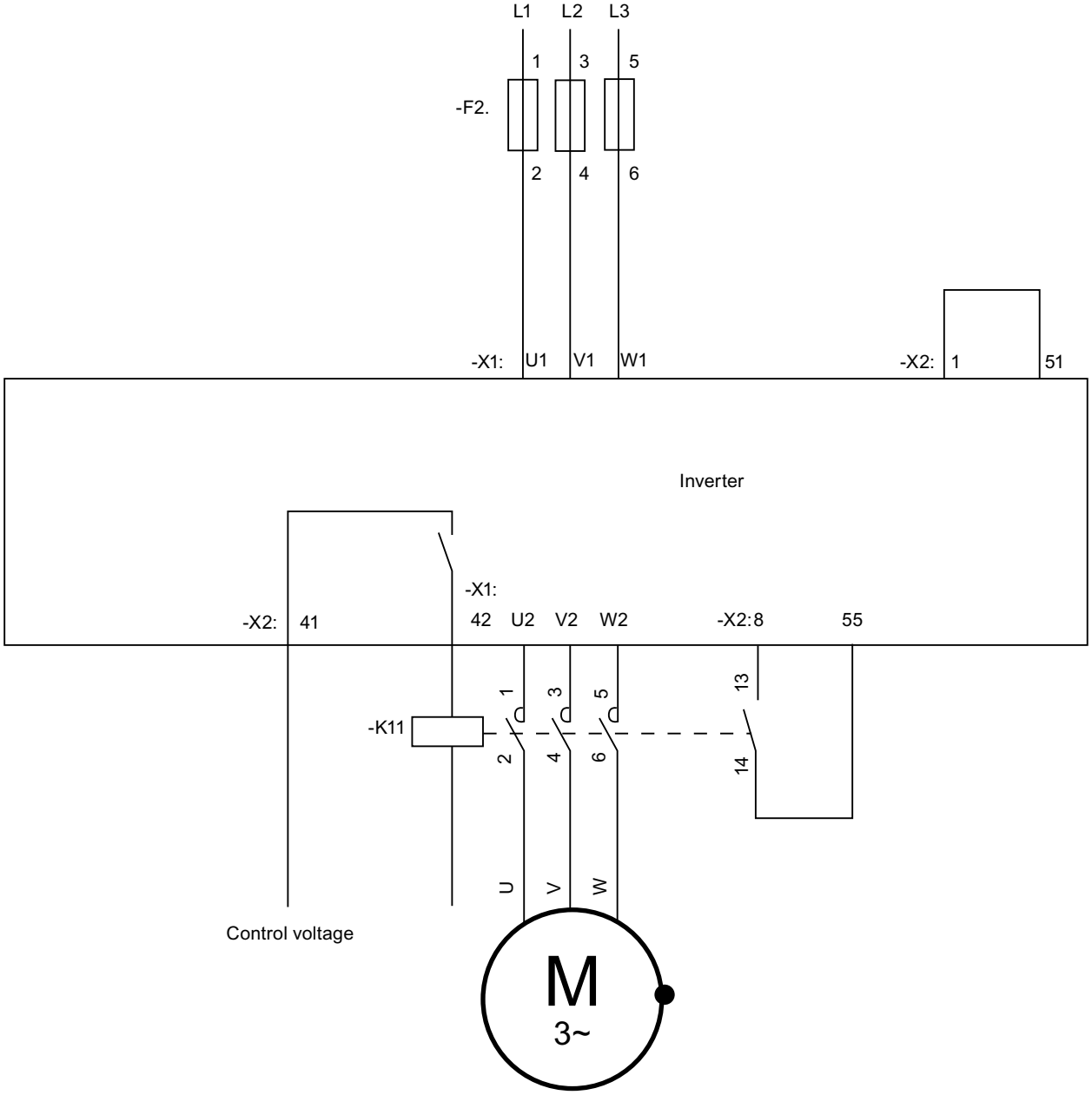

Figure 8-26 Motor contactor function

Table 8-9 Motor contactor functions

Terminal / component	Function
-K11	Output side main contactor Design recommendation: AC3 current of the contactor is at least the inverter output current
41, 42	Digital output for the main contactor control

Terminal / component	Function
U1,V1,W1	Mains connection
8	Main contactor feedback input
55	24 V DC supply voltage
1 und 51	Jumper for ground connection
U2, V2, W2	Motor connection

8.5.2 Multiple function of the analog and digital inputs

Analog inputs 1 and 2

The analog inputs have several functions:

- Under "P-ANALOG INPUTS/Analog input 1/AI-function" you can set the value from "Analog" to "PTC", "KTY84" or "PT100".
- Under "P-ANALOG INPUTS/Analog input 2/AI-function" you can set analog input 2 from "Analog" to "PTC", "KTY84" or "PT100".
- Also adjust the corresponding DIL switches of the -S2 switch row on board CB08
- More detailed information can be found in the section "DIL switches S1 and S2 (Page 101)".

The following functions are now available:

- "Analog":
  The analog input operates as a voltage input at control cable terminals -X2:52-51 / 54-51 or as a current input at control cable terminals -X2:50-51 / 53-51 The value is available as "AI 1" or "AI 2" for further processing.
- "PTC":
  The analog input operates as a PTC thermistor input at control cable terminals -X2:50-51 / 53-51. The PTC thermistor status is available for further processing as selection bit as "PTC AI 1" or " PTC AI 2"
- "KTY84":
  The analog input operates as a direct input for a KTY84-130 temperature sensor at control cable terminals -X2:50-51 / 53-51. The measured temperature is available as an analog value under "T-AI1" or "T-AI 2" for further processing.
- "PT100":
  The analog input operates as a direct input for a PT100 temperature sensor at control cable terminals -X2:50-51 / 53-51. The measured temperature is available as an analog value under "T-AI1" or "T-AI 2" for further processing.

Any analog input can only be used for one function. It is not possible to use several functions simultaneously for one input.

Digital inputs -X2:27 and -X2:28 as PTC thermistor inputs

The digital inputs are interpreted as a normal digital input for control with a 24 V signal. If these control cable terminals are wired to 10 V potential using a PTC thermistor sensor, these

function automatically as PTC thermistor monitoring inputs. The selection bits "PTC X2:27" and "PTC X2:28 indicate the PTC thermistor status.

NOTICE
Unsuitable evaluation unit If the PTC thermistor for explosion proof motors or for safe isolation is not evaluated using an ATEX-certified, safely isolated evaluation unit or the peripherals board, damage to the inverter can occur. Use an ATEX-certified, safely isolated evaluation unit or the peripherals board for safe operation.

Digital inputs –X2:27, –X2:28 and –X2:29 as frequency or tachometer inputs

These digital inputs can be used as a frequency or tachometer input, for example, in the following way.

- The field-oriented control at input -X25 / -X101 is not possible, e.g. if the n-sensor is installed on the machine and there is a gearbox between machine and motor.
- Only one simple proximity switch with e.g. four impulses per revolution is available. The resolution for the field-oriented regulation is too small in this case. It is suitable for displays or more precise speed regulation.
- You connect a frequency-dependent setpoint generator of the type used for mining applications, for example.

Example applications for the digital inputs as frequency inputs:

- Proximity switch with NAMUR output or with PNP-3 wire output
- Two-channel digital tachometer with HTL output

Proximity switch with NAMUR output or with PNP-3 wire output

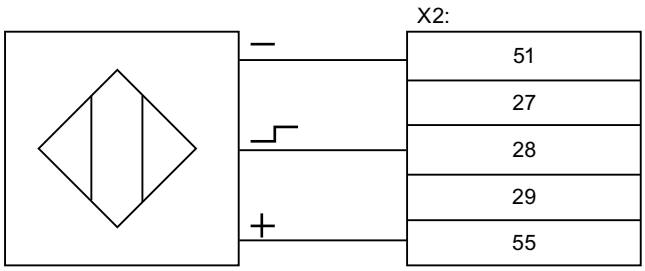

Figure 8-27 PNP speed sensor

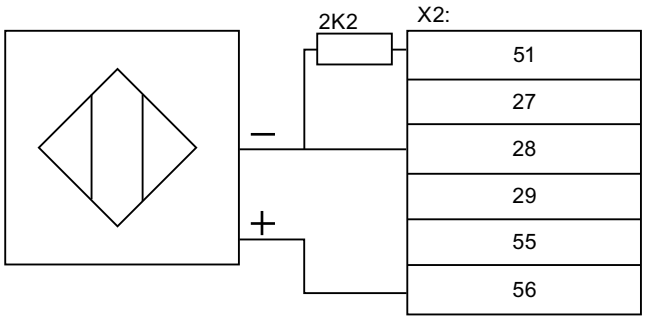

Figure 8-28 NAMUR speed sensor

Assumption: sensor produces four impulses per revolution for four-pole motor, nmax = 1500 rpm.

Note the following:

This speed is available for further processing as "Tacho act" from 0 rpm to 1500 rpm and as "Pulse act" from 0 % to 100 %.

- Connection according to connection diagram. Inputs –X2:27 and –X2:29 can be freely used. Bit "X2:28" is permanently set to 0, "PTC X2:28" is permanently set to 1.
- Parameterize the following:
  – At f ≠ 20 kHz: 1500 rpm / 60 s × 4 pulses = 100 Hz.

Select the following values for the respective parameters:

Table 8-10 parameter setting for speed sensor

Parameter	Value
"P-PULSE INPUT/Mode"	"Tacho 1-track"
"P-PULSE INPUT/Max.plse."	"1500 rpm"
"P-PULSE INPUT/Pulses/360"	"4"

Set the following parameters if a frequency value is needed for the further processing:

Table 8-11 parameter setting for speed sensor with frequency value

Parameter	Value
"P-PULSE INPUT/Mode"	"f < 20 kHz"
"P-PULSE INPUT/Max.plse."	"100 Hz"
"P-PULSE INPUT/Pulses/360"	"4"

The frequency is available for further processing as "Freq.act." from 0 Hz to 100 Hz and as "Pulse act" from 0 % to 100 %.

NPN sensors cannot be used.

Two-channel digital tachometer with HTL output

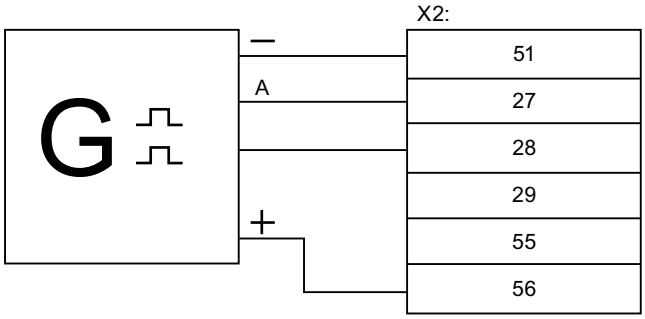

Figure 8-29 Digital tachometer, two-channel, HTL level

Assumption: digital tachometer produces 1,024 impulses per revolution for four-pole motor, nmax = 1500 rpm

Note the following:

- Connection according to connection diagram. Input -X2:29 cannot be used. Bits X2:27 to X2:29 are permanently set to 0, "PTC X2:27" to "PTC X2:29" are permanently set to 1.
- Check the frequency in the range from 20 kHz to 205 kHz:
  1500 rpm / 60 s × 1024 impulses = 25.6 kHz

Select the following values for the respective parameters:

Table 8-12 parameter setting for digital tachometer

Parameter	Value
"P-PULSE INPUT/Mode"	"Tacho 2-track"
"P-PULSE INPUT/Max.plse."	"1500 rpm"
"P-PULSE INPUT/Pulses/360"	"1.024"

The speed is available for further processing as "Tacho act" from 0 rpm to 1500 rpm and as "Pulse act" from 0 % to 100 %.

Set the following values for the respective parameters if a frequency value is needed for the further processing:

Table 8-13 parameter setting for digital tachometer with frequency value

Parameter	Value
"P-PULSE INPUT/Mode"	"f > 20 kHz"
"P-PULSE INPUT/Max.plse."	"25,600 Hz"
"P-PULSE INPUT/Pulses/360"	"1024"

The frequency is available for further processing as "Freq.act." from 0 Hz to 25.6 kHz and as "Pulse act" from 0 % to 100 %.

8.6 Setpoint channel and closed-loop control

8.6.1 Specifying source for speed setpoint

Specify under "P-SPEED DEFAULT//n Set source" the setpoint source to which theinverter must react, e.g. including:

- "Intern" using <up arrow> or <down arrow> of the display
- "AI 1" via analog input 1 of the control terminal block -X2
- "BUS 1" as control word via Profibus

8.7 Parameterization

8.7.1 Principle of operation of the configuration

NOTICE
Incorrect parameter settings The inverter and other connected components can be damaged or destroyed if the parameter settings are incorrect. Only qualified personnel may change parameters; the instructions in the Operating Manual and the technical data of the inverter and connected components must be carefully observed.

The configuration uses the principle Input→Processing→Output Many functions in plain text are available in the bit pool for the input. You always have the selection from the bit pool when you are in the menu of a processing function, for example when changing the function "P-ContrlRelease/Local" you always have the selection "\X2:8\X2:9…"

Processing functions for the output are available, for example "P-DigitalOutputs/Relays 1-4", "LED 1-2" or "P-AnalogOutputs".

Several functions are available for the processing, for example "P-MESSAGE-GEN MESS" or "P-PARAMETERSWITCH".

The following graphic clarifies this processing method:

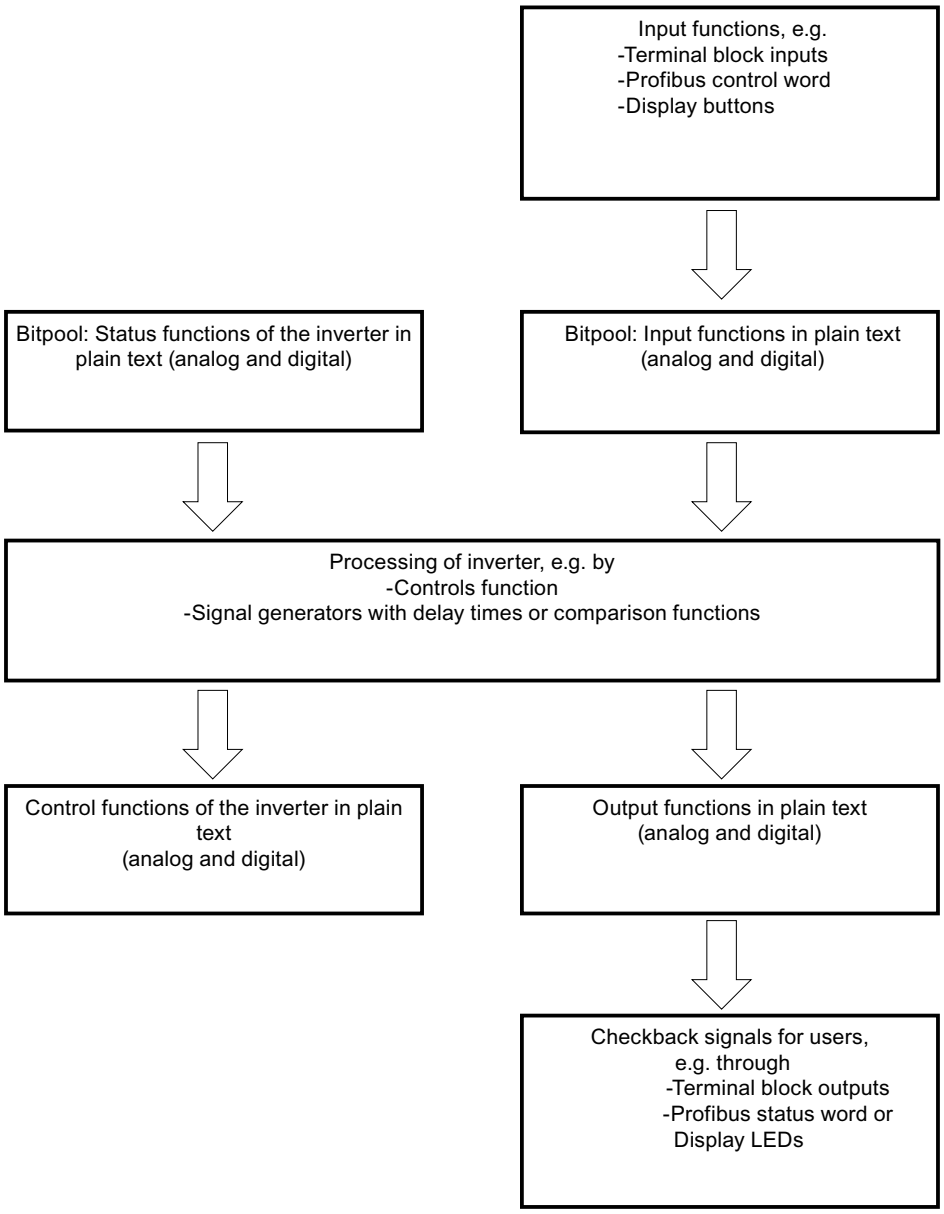

Figure 8-30 Configuration principle of operation

8.7.2 Protecting parameters against modification

NOTICE
Incorrect parameter settings The inverter and other connected components can be damaged or destroyed if the parameter settings are incorrect. Using the following measures, protect the parameter settings from unauthorized access.

You can configure all parameters of the inverter in the delivery condition using the internal control panel or via an RS 232 connection to a PC with the "IMS" software.

If you would like that the inverter should only be configured from one location, you can set this under "P-INTERFACE/Para-source".

If you would like to no longer allow any parameter changes, you must set the DIL switch S1.1 to "Off". The exact position of this DIL switch is described in the section "Sub-D connections and DIL switches" (Page 100).

8.7.3 Configuration using the inverter display

1. You reach the configuration menu by pressing the button <P>. The display "P-DRIVE DATA" is shown in the first line.
2. Individual menu items can be selected using <up arrow> and <down arrow>. For example, you reach "P-INTERFACE" using the <down arrow>.
3. When "P-DRIVE DATA" is displayed, press <Return> in order to display the submenu of "P-DRIVE DATA". The first parameter of "P-DRIVE DATA" "A=Standard" is shown in the second line.
4. If you press <Return> again, you see the display "A_Standard" for example on line two. The indicated cursor means that you can input a new value for the parameter using <up arrow> and <down arrow>.
5. If you press <Return> again, you see the changed display "A=Namur 1". The cursor is then no longer visible. The parameter is thus applied in the modified form.
6. Press <up arrow> or <down arrow> in order to change other parameters in the same menu. Press <P> to go one level higher in the menu structure.

You can then use the same principle of operation in any other menu.

8.7.4 More documentation about parameterization

You can find further documentation relating to parameterization on the Internet at www.siemens.com (http://www.siemens.com)

8.8 Examples / Applications

8.8.1 "Standard" application

8.8.1.1 Standard control cable terminals

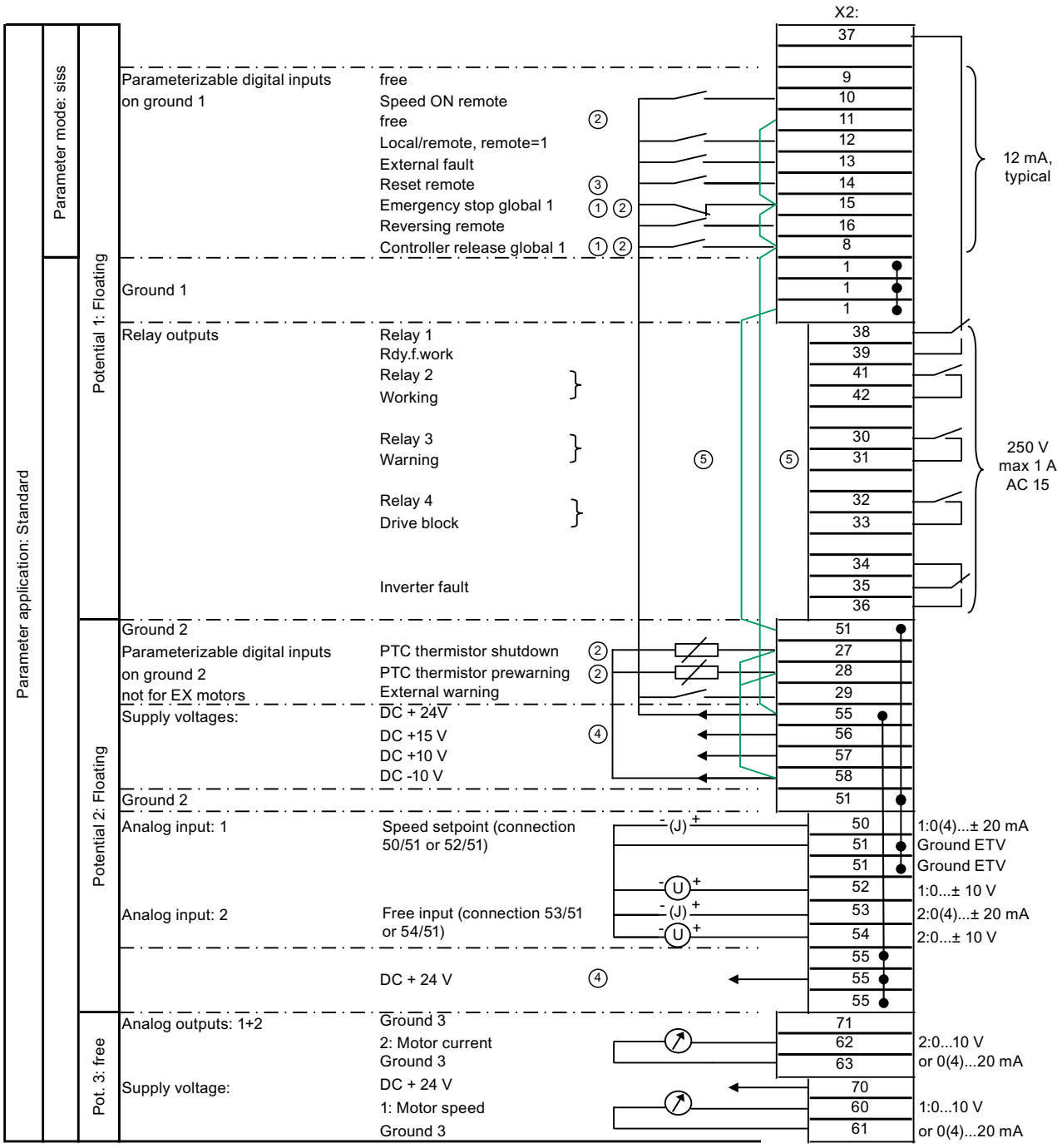

① Global = functional for "Local" and "Remote"

② If you use these inputs, remove the jumper.

③ As long as "P-INTERFACE:Reset-Source" is set to "Global" , all reset sources are always effective.

④ Max. current load of the control voltages:

- + 24 V DC, potential 2: 300 mA
- + 15 V DC, potential 2: 150 mA ± 10 mA

This voltage can supply a speed encoder connected at terminal -X101.

⑤ Remove both these jumpers if you are using peripheral boards 3 / 4. The supply is realized via -X2:1/3.

Figure 8-31 Control cable terminals for "Standard" application

8.8.1.2 Control cable terminals "peripheral board 1"

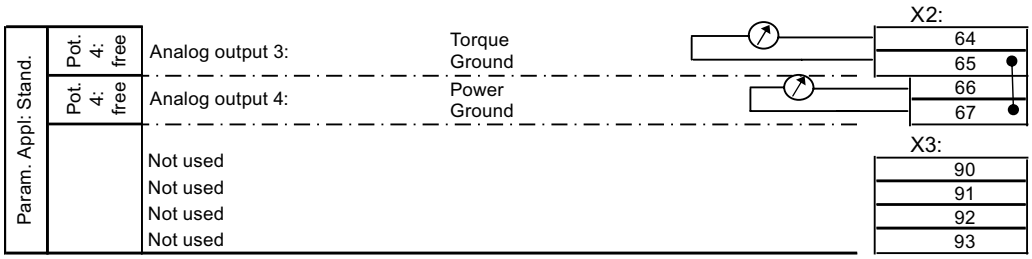

Figure 8-32 Control cable terminals for "peripheral board 1" application

8.8.1.3 Control cable terminals "peripheral board 2"

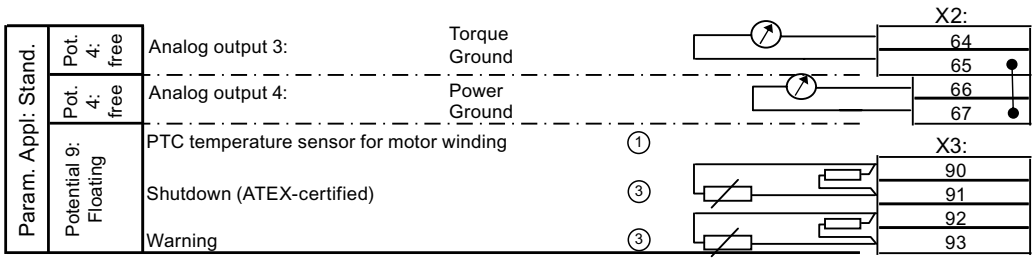

① PTC inputs, suitable for motors in the Ex-zone or Non-Ex-Zone

③ Remove the 100 Ω resistor if these control cable terminals are in use.

Figure 8-33 Control cable terminals for "peripheral board 2" application

8.8.1.4 Control cable terminals "peripheral board 3"

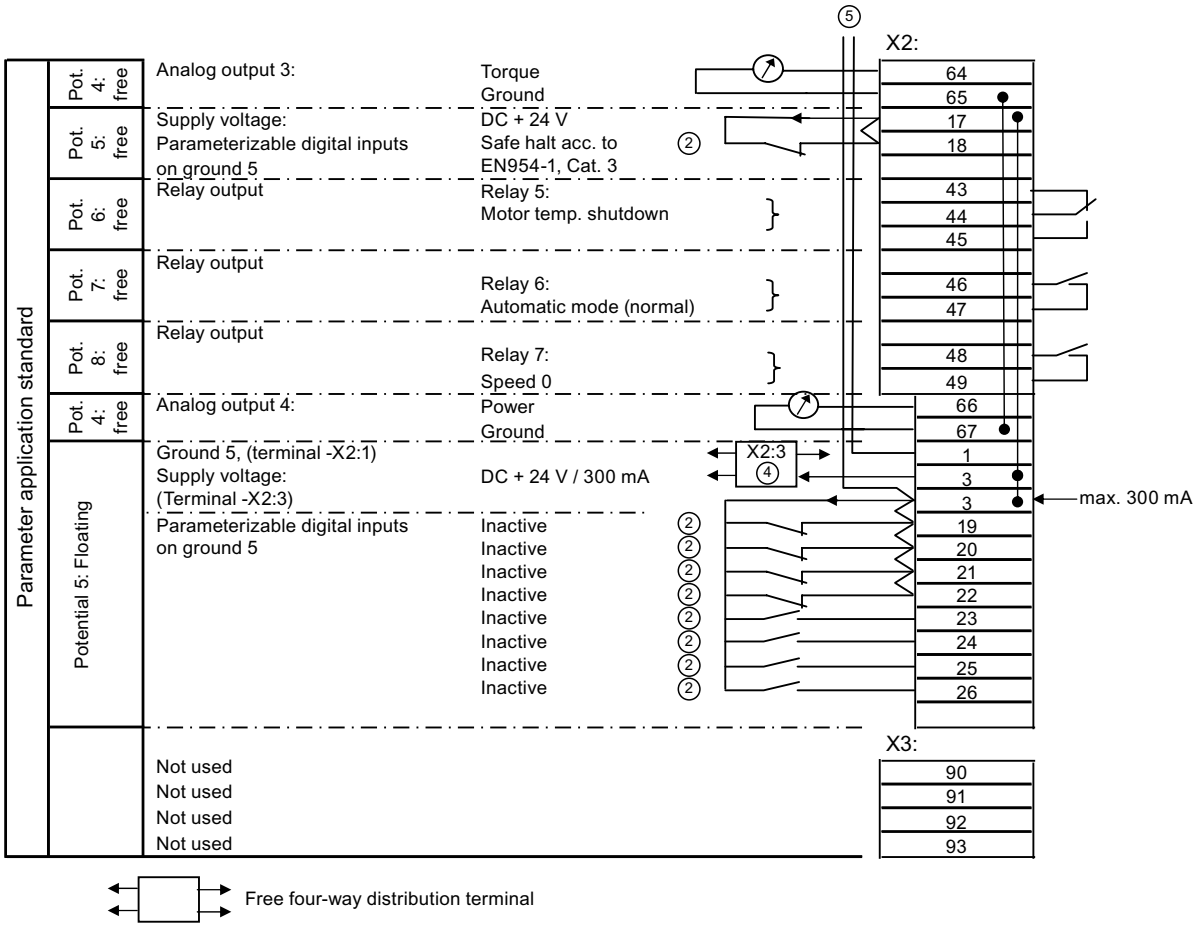

② Remove the jumper if these control cable terminals are in use.

④ Four-way distribution terminal for 24 V

⑤ In the case of an equipped peripheral board 3 / 4, the supply of the digital inputs -X2:8 … 16 is changed over. The digital inputs are supplied from -X2:1/3 instead of -X2:51/55.

Figure 8-34 Control cable terminals for "peripheral board 3" application

8.8.1.5 Control cable terminals "peripheral board 4"

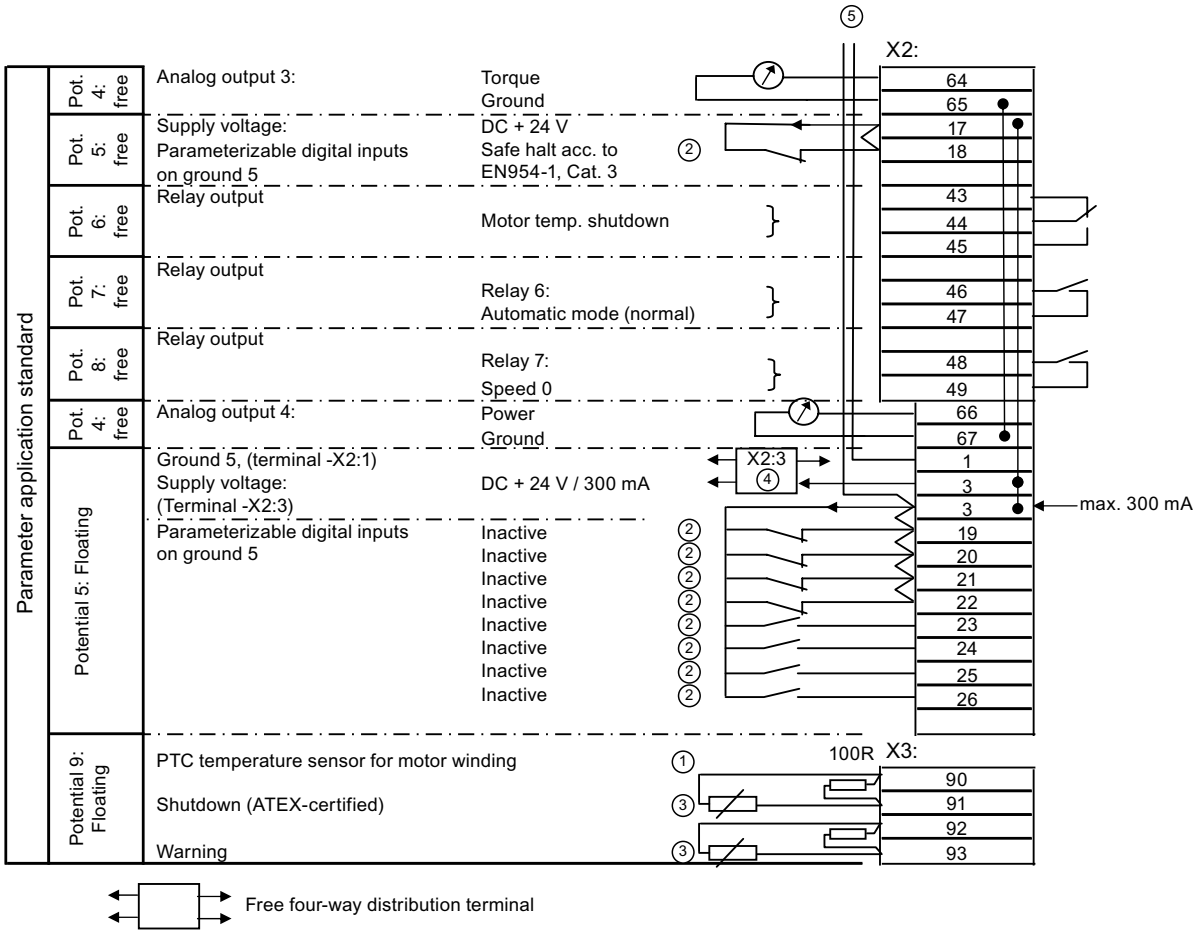

① PTC inputs, suitable for motors in the Ex-zone or Non-Ex-Zone

② Remove the jumper if these control cable terminals are in use.

③ Remove the 100 Ω resistor if these control cable terminals are in use.

④ Four-way distribution terminal for 24 V

⑤ In the case of an equipped peripheral board 3 / 4, the supply of the digital inputs -X2:8 … 16 is changed over. The digital inputs are supplied from -X2:1/3 instead of -X2:51/55.

Figure 8-35 Control cable terminals for "peripheral board 4" application

8.8.1.6 Mode setting of the "Standard" application

The mode setting for the "Standard" application is "siss". Further information can be found in section "Standard mode settings" (Page 87).

8.8.1.7 Assignment of the digital inputs

Terminal -X2:13	External fault input. In the case of actuation with 24 V, this results in an error shutdown with storage.
Terminal -X2:29	External warning. In the case of actuation with 24 V, this results in a warning without storage.
Terminal -X2:27	Connect a motor PTC thermistor for the motor monitoring here. If the sensor is triggered, a "Motor overtemperature " shutdown is performed, which is stored. More detailed information can be found in the section "Multiple function of the analog and digital inputs" (Page 112). In the case of the "peripheral board 2 / 4" option, connect the PTC thermistor connector to the peripheral board.
Terminal -X2:28	Connect another motor PTC thermistor for the motor monitoring here. If the sensor triggers, a warning with "!! Advance warning !! Motor overtemperature" is output, which is not stored. More detailed information can be found in the section "Multiple function of the analog and digital inputs" (Page 112). In the case of the "peripheral board 2 / 4" option, connect the PTC thermistor connector to the peripheral board.
In the case of the "peripheral board 3 / 4" option	The digital inputs are set to inactive and can thus be freely used for other configurations.

8.8.1.8 Assignment of the digital outputs

Relay 1, terminal -X2:37, 38, 39	The "Ready" message as changeover contact in the open-circuit principle is available to you here. Ready for operation means that the inverter has no faults and the DC link is preloaded.
Relay 2, terminal -X2:41, 42	The message "Working" is output here.
Relay 3, terminal -X2:30, 31	All warnings which are generated in board CB08 are signaled here in the open-circuit principle. Example: The message "!! Prewarning !! Inverter overtemp."
Relay 4, terminal -X2:32, 33	-
Relay outputs, terminal -X2:34, 35, 36	Inverter fault All faults which cause the inverter to shut down are signaled here with a changeover contact in the closed-circuit principle.
In the case of the "peripheral board 3 / 4" option, terminals -X2:43 … 49	The messages "Temp.Motor", "Shutdown", "Automat.operation" and "Speed zero" are available.

8.8.1.9 Assignment of the analog inputs

- Analog input one, terminal -X2:50, 51, 52:
  - You apply your speed setpoint to these terminals which is effective in the "Remote" mode.
  - You can use the terminal 50 as current input or the terminal 52 as voltage input. The terminal 51 is the ground connection.
  - The input range from 0 mA to 20 mA or from 0 V to 10 V is proportional to the output frequency from 0 Hz to 50 Hz.
- Analog input two, terminal -X2:53 and -X2:54:
  - Equivalent, additional analog input.

8.8.1.10 Assignment of the analog outputs

- Isolated terminal -X2:62, 63:
  An output signal of 4 mA to 20 mA is present here. This corresponds to a motor current from zero up to a unit-dependent value.
- Isolated terminal -X2:60, 61:
  This output provides a speed signal. A value from 4 mA to 20 mA is the default. This corresponds to a motor speed from 0 to 1500 rpm.
- Terminal -X2:64, 67:
  In the case of the "peripheral board 1 ... 4" option, the torque and the power are available at these terminals. A value from 4 mA to 20 mA is the default. The corresponding countervalue is output-dependent and is stored in the software "IMS".

8.8.1.11 Input "Safe halt" / PTC thermistor inputs on peripheral board

Detailed information

Detailed information can be found in the section "Peripheral boards 1 to 4" (Page 136).

8.8.2 "NAMUR" application

8.8.2.1 Control cable terminals for "NAMUR" application

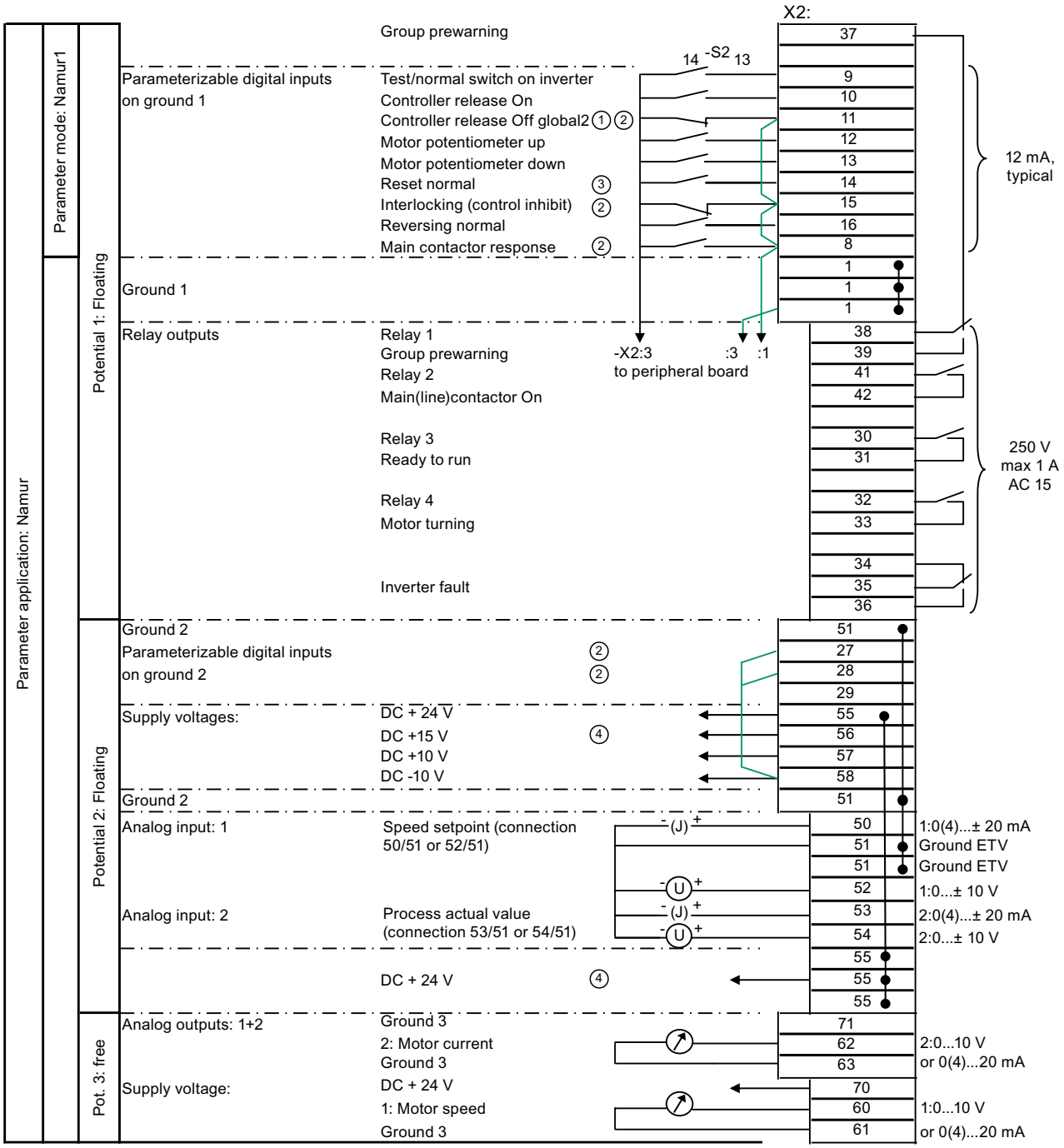

① "Global" = functional for "Test" and "Normal"

② If you use these inputs, remove the jumper.

③ As long as "P-INTERFACE: Reset-Source" is set to "Global" , all reset sources are always effective.

④ Max. current load of the control voltages:

- + 24 V DC, potential 2: 300 mA
- + 15 V DC, potential 2: 150 mA ± 10 mA

This voltage can also supply a speed encoder connected at terminal -X101.

Figure 8-36 Control cable terminals for "NAMUR" application

8.8.2.2 Control cable terminals "peripheral board 4"

NOTICE
Non-compliance with NAMUR guideline NE-37 The NAMUR guideline NE-37 is only completely implemented with the "peripheral board 4" option.

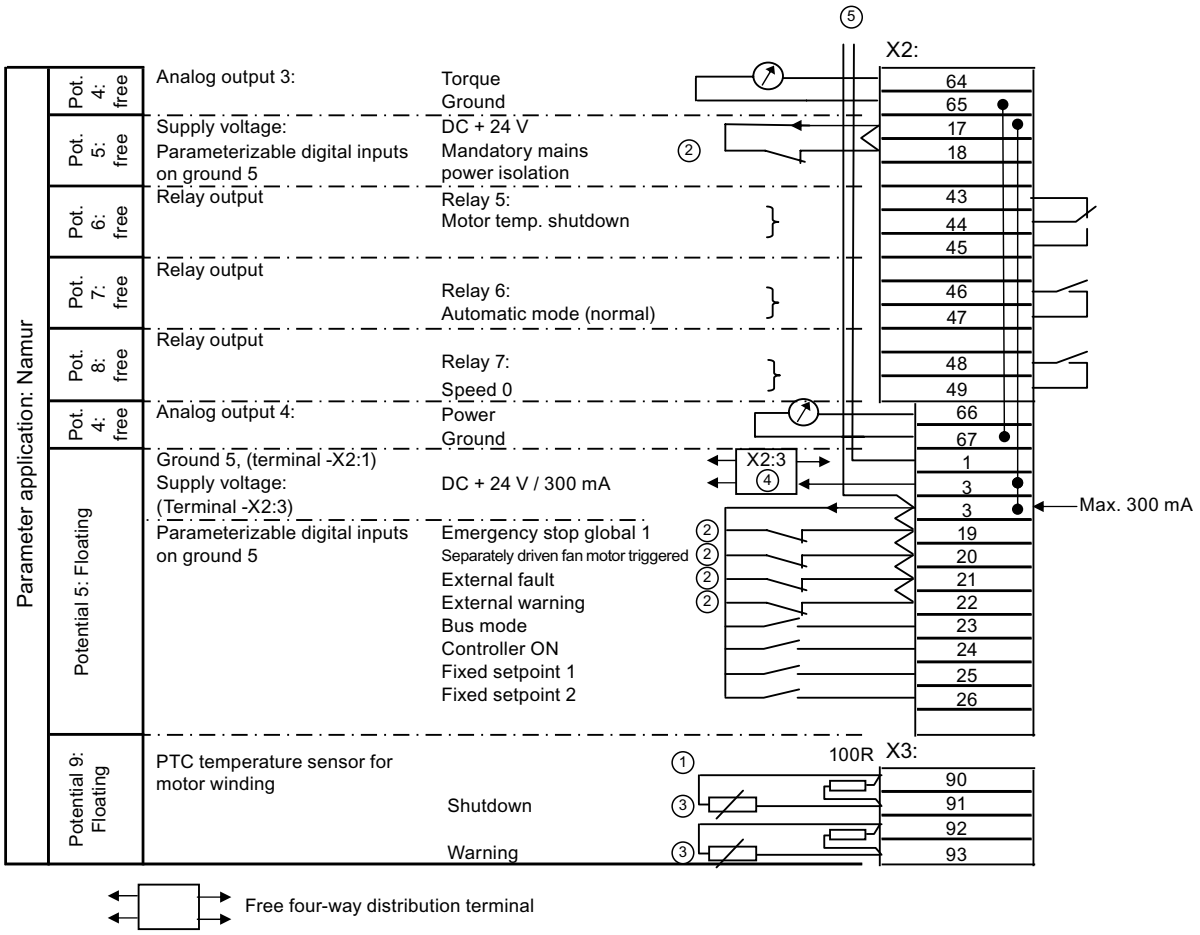

① PTC inputs, suitable for motors in the Ex-zone or Non-Ex-Zone

② If you use these inputs, remove the jumper.

③ If you use these inputs, remove the 100 Ω resistor.

④ Four-way distribution terminal for 24 V

⑤ In the case of equipped peripheral board 3 / 4, the supply of the digital inputs -X2:8 to 16 is changed over. The digital inputs are now supplied from -X2:1/3 instead of -X2:51/55.

Figure 8-37 Control cable terminals for "peripheral board 4" application

This application fulfills the requirements concerning the terminal assignment and the inverter functions which have been developed by the Normengemeinschaft für Mess- und Regelungstechnik, in short NAMUR. These specifications can be found in the NAMUR NE37 guideline.

Perform the wiring of the terminal block in accordance with the terminal plan. Remove the factory-installed jumpers according to the "Standard" application if the respective application requires this.

8.8.2.3 Mode setting of the NAMUR application

The mode setting for the NAMUR application is "Namur 1". Refer to the section "NAMUR mode settings" (Page 90) for more detailed information.

8.8.2.4 Assignment of the relay outputs

- Terminal -X2:41, 42:
  You can control the main contactor using these terminals. The main contactor function is not activated in the software for the NAMUR application. For more detailed information, refer to the section titled "Contactor functions" (Page 108).
- Terminal -X2:37, 39:
  All warnings which are acquired in board CB08 are signaled here with a changeover contact in the open-circuit principle, e.g. message ""!! Prewarning !! Inverter overtemp.".
- Terminal -X2:30, 31:
  The "Rdy.f.work" message as normally open contact is available to you here. "Rdy.f.work means that the inverter has no faults and the DC link is pre-charged.
- Terminal -X2:32, 33:
  The contact closes if the motor is turning.
- Terminal -X2:34 … 36:
  "Inverterfault: All faults which cause the inverter to shut down are signaled here with a changeover contact in the closed-circuit principle.
- Terminal -X2:43 … 49:
  In the case of the "peripheral board 4" option: the messages "Temp.Motor", "Shutdown", "Automat.operation" and "Speed zero" are displayed here.

8.8.2.5 Assignment of the analog inputs

- Terminal: -X2:50 ... 52:
  - Apply the speed setpoint which is active in normal operation to these terminals.
  - You can use the terminal 50 as current input or the terminal 52 as voltage input. The terminal 51 is the ground connection.
  - The input range from 0 mA to 20 mA or from 0 V to 10 V is proportional to the output frequency from 0 Hz to 50 Hz.
- Terminal: -X2:53, 54:
  - The signal for the speed actual value feedback can be supplied to this input. The values 0 mA to 20 mA at terminal 53 and 0 V to 10 V or up to 180 V at terminal 54 are preset.
  - You can connect an analog motor tachometer to these terminals.
  - More detailed information can be found in the section "DIL switches S1 and S2" (Page 101).
  - You can use the signal in the software for limit value comparisons or as display.

8.8.2.6 Assignment of the analog outputs

- Isolated terminal -X2:62, 63:
  An output signal of 4 mA to 20 mA is present here. This corresponds to a motor current from zero up to a unit-dependent value.
- Isolated terminal -X2:60, 61:
  This output provides a speed signal. A value from 4 mA to 20 mA is the default. This corresponds to a motor speed from zero to 1500 rpm.
- Option "Peripheral board 4":
  The torque and power are available at terminals –X2:64 … 67. A value from 4 mA to 20 mA is the default. The corresponding countervalue is output-dependent and is stored in the parameterization software "IMS".

8.8.2.7 Input "Mandatory mains power isolation" / PTC thermistor inputs on peripheral board

Detailed information can be found in the section "Peripheral boards 1 to 4" (Page 136).

Maintenance 9

9.1 Maintenance and servicing

For your personal safety and in order to prevent material damage it is essential that you follow the instructions given in section "Safety instructions" (Page 13), especially section "Information about personal protection" (Page 16), and all safety-related instructions in your product documentation. Pay particular attention to the safety notices on the product itself.

There is an appropriate maintenance schedule for each device type. We recommended that maintenance is carried out at least once per year. For further information, please contact the Service Center, see "Service & Support" (Page 161).

Retighten all screw connections at regular intervals.
Depending on utilization, the installed fans each have a service life of between 5 and 10 years.
The service life of the lithium battery on the board CB08 is 10 years.
The electrolyte capacitors are designed for a service life of 20 years.

- Service the device after 5 years in accordance with a specified maintenance schedule.
- Check and clean the equipment and air filter mats (if present) depending on the accumulation of dust.

9.2 Replacing compact device

Procedure

Proceed as follows if a compact device must be replaced completely:

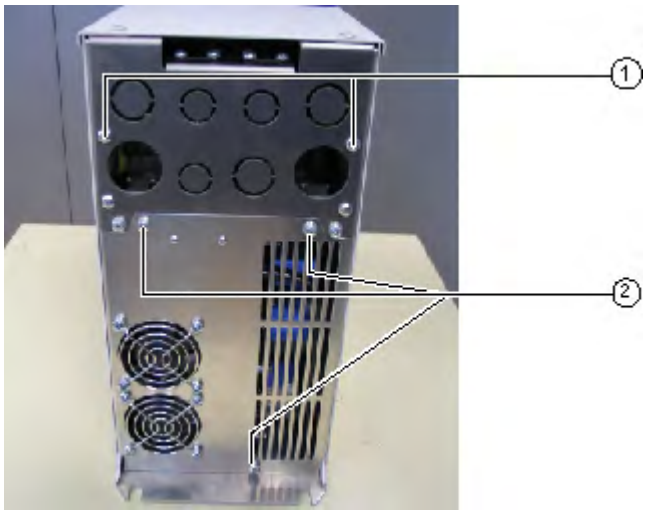

① Screws - device replacement

② Screws - fan replacement

Figure 9-1 Bottom view of compact device

1. Undo the device replacement screws on the outside.
2. Unscrew the cover at the front.
3. Slacken both the nuts of the cable entry plate in the upper connection space near the cover.
4. Disconnect the power cables.
5. Unplug the controller wiring connector.
6. Release the fastener on the mounting plate by only slackening the screws at the bottom.
7. Lift the inverter away so that the cabling remains with the cable entry plate.
8. Install the new inverter in reverse order.

Observe the instructions for the transport of inverters in the section "Transporting inverter" (Page 33).

9.3 Replacing fans for the compact device

Procedure

All internal inverter fans are installed at the bottom of the inverter. Proceed as follows to remove the fans:

1. Undo the fan replacement screws - wide inverters have more screws than narrow inverters.
2. Remove the complete fan plate downwards. The fan connections are made using one connector.
3. Replace the defective fan on the removed fan plate.
4. Reassemble in reverse order.

9.4 Maintenance and service of water cooling (option)

Visual inspection

As part of the inspection of the complete system, Siemens recommends that the water cooling parts are visually inspected every 6 months and a leakage check performed.

Perform the following checks on an annual basis:

- Check that the hose clamps and valve connections are securely seated.
- Perform a visual inspection of the hoses (where these are visible) for tears, cracks or other damage.

We expect an average lifetime of 20 years for the hoses when the specified environmental conditions are complied with. Values must be taken from the documentation.

You can find further information in the documentation 4BS0698 AL for water cooling systems.

9.5 Decommissioning

The device components used have no PCB and BeO.

Dispose of the equipment in accordance with the applicable regulations and also with respect to electrolyte capacitors.

If you want to decommission a device, please contact the Service Center.

Spare parts and accessories 10

10.1 Use of tested, certified and Siemens-approved components

Observe the following instructions if you would like to integrate your own components in the system.

⚠ WARNING
Components which are not approved It is dangerous to use components which are not tested, not certified and not approved by Siemens. This can result in death, serious injury or material damage. Use only components which are tested, certified and approved by Siemens.

10.2 Peripheral boards 1 to 4

10.2.1 General information about the peripheral boards 1 to 4

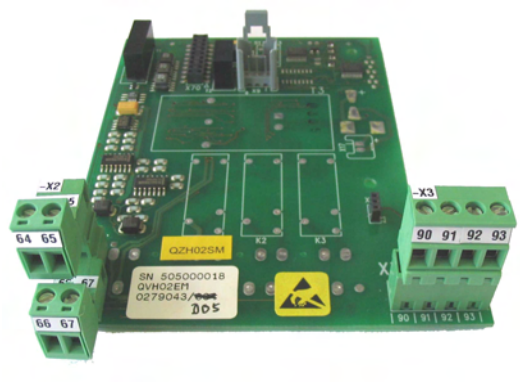

Peripheral board 1

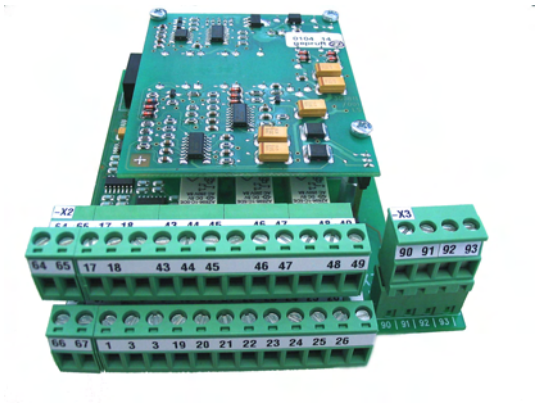

Peripheral board 4

Peripheral board terminals

- The functionality of the inverter is expanded with the peripheral board.
- Every inverter can be fitted with one peripheral board.
- The following variants are available:

Table 10-1 Configuration of the peripheral boards

	Peripheral board 1	Peripheral board 2	Peripheral board 3	Peripheral board 4
2 PTC thermistor inputs, one ATEX-certified, one warning motor temperature monitoring for motors in the Ex-zone	-	X	-	X
One "Safe halt" digital input according to EN 954-1, Category 3	-	-	X	X
9 digital inputs (DI)	-	-	X	X
3 relay outputs (DO)	-	-	X	X

	Peripheral board 1	Peripheral board 2	Peripheral board 3	Peripheral board 4
2 analog outputs (AO)	X	X	X	X
Power supply unit, 24 V, 300 mA	-	-	X	X

In addition to the main board, the peripheral boards two and four are also fitted with a daughterboard which contains the circuitry for the PTC thermistor inputs.

The connection diagram of these variants can be found in the section "Control cable terminals "peripheral board 1" (Page 120).

Use the digital inputs and the analog outputs of the peripheral board corresponding to the inputs and outputs on the main terminal block. Further information can be found in the section "Standard control cable terminals" (Page 119).

Configure the three relay outputs corresponding to the relay outputs of the main terminal block. For further information about galvanic isolation, refer to section "Safe isolation in accordance with EN 61800-5-1" (Page 97).

10.2.2 Electronic shutdown for "Safe halt" / PTC inputs

10.2.2.1 Standards for electronic shutdown

The electronic shutdown complies with the following standards:

- DIN EN ISO 12100, Safety of machinery, Part 1 and 2
- DIN EN 954, Safety-related parts of control systems, Parts 1 and 2
- DIN EN ISO 14121, Guidelines to assess risk (draft standard)
- EN 50281, Electrical apparatus for use in the presence of combustible dust
- EN 60079, Electrical apparatus for explosive gas atmospheres according to VDE 0165, except mine workings

10.2.2.2 General information about electronic shutdown

Using the electronic shutdown concept of the inverter, a system without main contactor can be shut down. This also applies for the operation of motors in the Ex-Zone 1. In the case of a fault, the inverter interrupts the power supply to the motor electronically.

10.2.2.3 Motor temperature monitoring shutdown concept

Principle of operation

The peripheral board 2 / 4 evaluates the measure motor temperature using a PTC thermistor. The board ensures safety and reliability using the installed short-circuit detection. The "Safe

halt" function of the peripheral board 2 / 4 and the "Safe halt" function use the same shutdown routing:

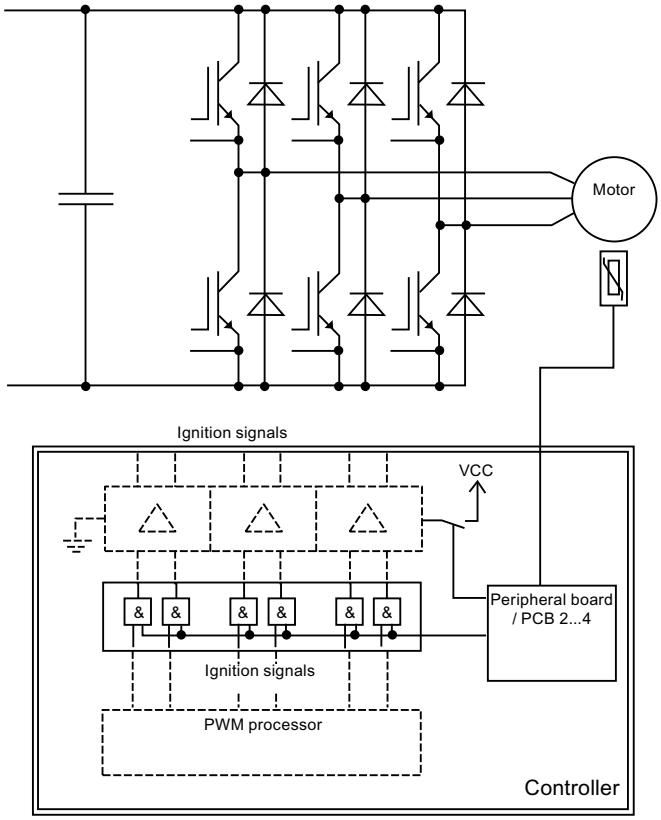

Figure 10-1 Electronic shutdown concept

The controller of the inverter processes the signal of the peripheral board. In the case of a motor temperature too high or the "Safe halt" function, the inverter blocks the ignition signals of the IGBTs. The power supply of the driver stages is also disconnected. Both these shutdown routes ensure that the power supply for the motor is interrupted immediately. Further heating or rotation of the motor is ruled out. The inverter cannot be reset or switched on again until the motor has cooled down sufficiently.

If the power fails, the inverter safely interrupts the power supply to the motor as no more ignition signals are transmitted. If there was a fault present at the time of the power failure, the inverter also remains in an error state when the power is restored.

10.2.2.4 Risk comparison

In order to rule out possible risks in advance, a risk analysis according to EN 1050 or DIN EN ISO 14121 (draft standard) has been performed for the shutdown path. This analysis concluded that the risk of loss of the shutdown function is small due to the redundant design of the shutdown route and the use of reliable components. However, no general risk assessment was performed as this is usually dependent on many customer-specific parameters. This must be taken into account for the implementation and operation of a system. In comparison to the shutdown using contactors, only the additional hazard die to dangerous shock currents occurred in the inverter.

Due to the redundant design, it is even achieved that the shutdown is still ensured even if a fault in the electronic shutdown route occurs. As components proven in operation are also used, the inverter is in compliance with EN 954-1, Category two.

WARNING

Danger of explosion in the case of deactivated shutdown

In principle, the shutdown function can be deactivated by connecting an appropriate resistor instead of the PTC thermistor to the control cable terminals.

10.2.3 "Safe halt"

The control cable terminals -X2:17, -X2:18 provide a safety-oriented input for safe standstill to EN 954-1, category three. This input safely prevents starting the machine. Use this input, for example for safe shutdown in the case of servicing work on the machine. When using the input, remove the jumper inserted between the control cable terminals -X2:17, -X2:18.

The "Safe halt" function and the ATEX-certified PTC thermistor input have a redundant switch-off path in the inverter. The implementation is performed using hardware. A relay in the power section of the inverter disconnects the power supply of the IGBT drivers. A second circuit, also via hardware, produces a controller block. Both switch-off paths are based on the closed-circuit principle, i.e. a failure of the control voltage results in redundant shutdown of the inverter.

WARNING

Electric shock

If you carry out maintenance or overhaul work on the inverter without safely disconnecting the power supply, serious injury or death due to electric shock can occur. The input for "Safe halt" is not an Emergency Off input which safely disconnects the inverter or the motor from the mains power supply.

Safely and reliably disconnect the power supply before opening covers or terminal boxes at the inverter. For example, use a main switch.

10.2.3.1 Checking the "Safe halt" function

Procedure

Test the shutdown function for the operation of the "Safe halt" function. Proceed as follows:

1. Apply voltage to the inverter until the "READY" LED lights.
2. Open the jumper inserted between the control cable terminals -X2:17 and -X2:18. The inverter then switches to "FAULT":
   – The "READY" LED goes out.
   – The red "FAULT" LED lights.
   – The inverter display shows the message "Safe halt active".
3. From this time, the inverter cannot be switched on by pressing the <On> button on the display.
4. Acknowledge the error, e.g. using the <S+I> buttons on the display. The inverter checks both the redundant shutdown routes.
   – If the inverter returns to "READY" after the acknowledgement and does not display any errors, the test has been completed successfully.
   – If the inverter remains on "FAULT" and "!!FAULT!! Test Safe halt" is on the display, one of the shutdown routes is not functioning correctly. In this case, you must contact the factory.
5. The inverter checks the safety function automatically when the control voltage of the inverter returns or when the error is acknowledged after a test.

10.2.3.2 "Safe halt" in the DC link version

The "Safe halt" input is redundant in design from the control cable terminal. You can use a switching element with one circuit or with two circuits. In the case of two circuits, connect the second contact of the switching device to control cable terminals -X2:3 and -X2:24. Provide conversion of the inverter. This can only be performed by the service personnel of the manufacturer. Contact the factory for this.

If you only actuate one circuit in this configuration, "!!FAULT!! Actuation Safe halt" is shown on the display.

NOTICE
Malfunctions If the inverter is used in safety-relevant applications with visible transport damage, malfunctions and damage to property can occur. Do not use inverters with visible transport damage.

- Only replace a peripheral board 2 / 4 with safety-oriented inputs with original parts. Only replace parts in consultation with the factory.
- Use the "Safe halt" function of the inverter for asynchronous and synchronous motors. If two errors also occur in the power section, this can result in residual rotation for synchronous motors. The residual rotation angle can be maximum 180°. Calculate the residual rotation angle from 360° / number of poles n. Take account of the residual rotation for your design. This does not apply for asynchronous motors.

10.2.4 PTC inputs for motor PTC thermistor

The peripheral boards 2 / 4 provide two PTC thermistor inputs at the control cable terminals -X3:90-93 for the motor temperature monitoring. When using the inputs, remove the 100 Ω resistor connected there.

The peripheral board 3 has control cable terminals for the PTC inputs. However, there is no evaluation board. No monitoring is made if you connect PTC thermistors.

Test the PTC thermistors as described below. Consult the factory if the shutdown does not function.

Inverters without a peripheral board provide PTC thermistor inputs at control cable terminals -X2:27-28. If the peripheral board 2 or 4 is fitted, connect the PTC thermistors of the motor to control cable terminal -X3. This has the following advantages:

- Sensor short-circuit monitoring
- Protective separation of the PTC thermistor inputs from all other inputs up to a rated voltage of 690 V. The control cable terminals -X2:27/28 provides protective separation from the electronics, but no separation from the other inputs.
- Input -X3:90-91 is ATEX-certified according to PTB 07 ATEX 3057 for motors located in hazardous zones.
- Redundant shutdown route, realized using hardware.

See also

Input "Safe halt" / PTC thermistor inputs on peripheral board (Page 124)

10.2.4.1 Checking the PTC thermistor shutdown function

Procedure

Test the shutdown function before commissioning the board. Proceed as follows:

1. Replace the 100 Ω resistor at control cable terminals -X3:90-91 with a potentiometer with at least 10 kΩ. Set a value of approx. 100 Ω.
2. Ensure that 24 V is applied at control cable terminal -X2:8. When required, jumper -X2:8 and -X2:3.

3. Apply voltage to the inverter so that the "READY" LED on the display lights.
4. Increase the resistance at the potentiometer. The inverter must go to "FAULT" at the latest for 3,8 kΩ:
   – The "READY" LED goes out.
   – The red "FAULT" LED lights.
   – The inverter display shows the error message "!!FAULT!! PTC thermistor X3:90/91".
5. From this time, the inverter cannot be switched on by pressing the <On> button on the display.
6. Acknowledge the error, e.g. using the <S+I> buttons on the display. The inverter checks both the redundant shutdown routes for the acknowledgement.
   – If the inverter returns to "READY" after the acknowledgement and does not display any errors, the test has been completed successfully.
   – If the inverter remains on "FAULT" and "!!FAULT!! Test PTC X3:90/91" is shown on the display, one of the shutdown routes did not function correctly. In this case, please contact the factory.
7. If the inverter is ready again, then rotate the potentiometer towards 0 Ω. At the latest at a resistance of 15 Ω the short-circuit monitoring of the sensor circuit responds. Follow the description under points four and five.
8. The safety function is checked automatically when the control voltage of the inverter returns and when the error is acknowledged after a test.

10.3 Brake transistor and brake resistor

During motor operation the electrical power flow is from the inverter to the motor. During generator operation the electrical power flow is from the motor to the inverter.

Example: braking flywheels.

The DC link current reverses the direction. The standard version of the inverter cannot feed energy back into the system. Kinetic energy can be converted into dissipated heat in braking operation. Approx. 10% braking torque is available in the upper speed range. A braking torque of up to 50% without additional equipment is achieved in the medium and lower speed ranges by oversaturation of the motor. With the brake transistor accessory, the same braking as driving torque is available. The energy occurring is converted to heat using a pulsed transistor. Also connect an external brake resistor.

WARNING

Risk of fire

If the clearance between the resistors and the neighboring components is selected too small, fire can occur due to overheating. This can result in death, serious injury or material damage.

Maintain a minimum clearance of 200 mm.

10.3.1 Dimensioning the brake resistor

Select a resistance value of at least that stated in the technical data. This value corresponds to the minimum configurable value. The maximum value is calculated from the following equation:

$R = (1.57 \times U_{mains})^2 / P_{brake}$

10.3.2 Connecting the brake resistor

1. Using the device designation on the rating plate of the device, check whether you have a device with the "brake resistor" option. The designation must be ...2T..-.....-...B....
   For more detailed information, refer to section "Type designations" (Page 27).
2. Connect the external braking resistor at terminals -X1:R and -X1:UD2+.
3. Set the parameter "P-INVERTER DATA/Brake" to "On".
4. Set the rated output of the resistor under "/P-BrakeRes." and the resistance value under "/R-BrakeRes.". In this way, you prevent overloading of the resistor.

CAUTION

Incorrect parameter settings

If you parameterize the resistance data incorrectly, you can destroy the brake transistor or the brake resistor which can result in injury to personnel.

Input the correct data in the inverter.

Install the resistors so that the perforated plate is on the bottom, top and the front sides. The connection box can be provided on the left or the right side.

If you require several resistors for series or parallel connection, install the resistors next to each other. This also applies for wall mounting.

10.4 Parameter overview

A more detailed overview of all parameters can be found in the "IMS" software or in the parameterization guide. You can find both on the Internet (http://www.siemens.com).

10.5 "Factory settings" application

Saved device settings which have been made during the internal factory device inspection can be found in this application. For example, these can be special data for the motor or also a complete parameter configuration.

10.6 Protective cover IP21 for compact and compact Plus devices

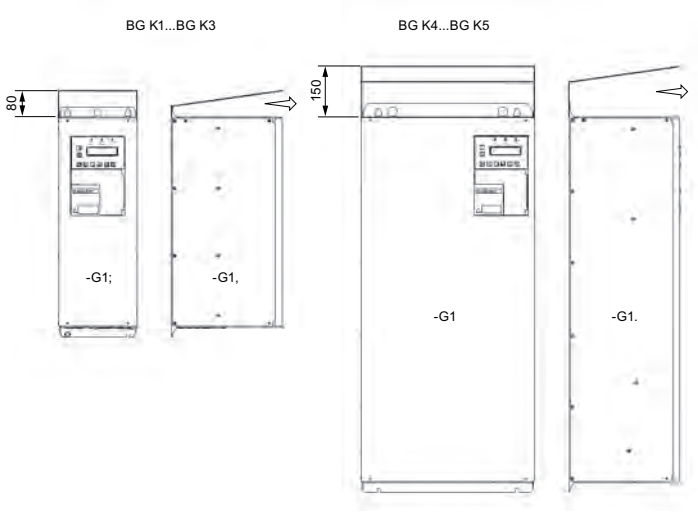

Figure 10-2 Canopy IP21

All compact units have degree of protection IP20. The canopy with degree of protection IP21 is available as an accessory for all compact and compact Plus devices. The cover is 5 mm wider on both sides than the inverter.. Take account of this clearance for the alignment. Leave the outlet area at the front clear.

Proceed as follows to install the roof supplied loose:

1. Screw the inverter without cover on to a mounting plate. Do not tighten the top two mounting screws completely.
2. Slide the cover under the not yet completely tightened mounting screws.
3. Tighten the mounting screws completely.

With degree of protection IP21, the type code changes from 2T2A.....-... to 2T3A.....-... .

10.7 Main switch "Q 2T..." or "W 2T..."

Inverters can optionally be purchased with a main switch as switch disconnector. The manual operation of the switch is on the inside for the "W" version. The switch is strictly a maintenance switch. The switch can only be operated when the corresponding covers for compact units or doors for cabinet units are opened.

The switch can be manually operated from the outside for the "Q" version. The handle can be blocked in the zero position with up to three padlocks. The switch is thus protected against being switched on again. The padlocks are not included in the delivery.

For this option, the following dimensions are produced for the individual frame sizes:

Table 10-2 Main switch option for different frame sizes

BG K1 … BG K4	Standard device dimensions only
BG K5	Option "Q" / "W" is not possible.

BG K51	For this frame size you can integrate option "Q" / "W".
BG K6	In this case, option "Q" / "W" is only possible in a cabinet system 2X….
BG K6 BG SL/W2…BG SL/W3	No different dimensions than standard device

CAUTION

Serious injury and material damage caused by arcs

If the mains power supply cable is not properly connected to the main switch for the "Q" / "W" option, destruction due to arcs can occur. Connect the mains power supply line to the main switch properly. Follow the connection instructions supplied by the manufacturer of the main switch The instructions can be found in the unit or inside the door in the cabinet pocket.

10.8 DC link terminals for compact devices

Features

The DC link terminals –X1:UD+2 and –X1:UD-2 are generally available for the small inverters up to 2T2A07400-030 for 400 V or, up to 2T2A07500-037 for500 V. These are optionally available for all larger inverters. The inverters only have to be connected using the DC link if you would like to establish a DC network. Only implement the DC network if you would like generator operation with one drive.

Example: Test station with load apparatus. In this case only the losses are supplied via the network. The generated energy is routed via the DC link. Refer to the following graphic for the electrical design:

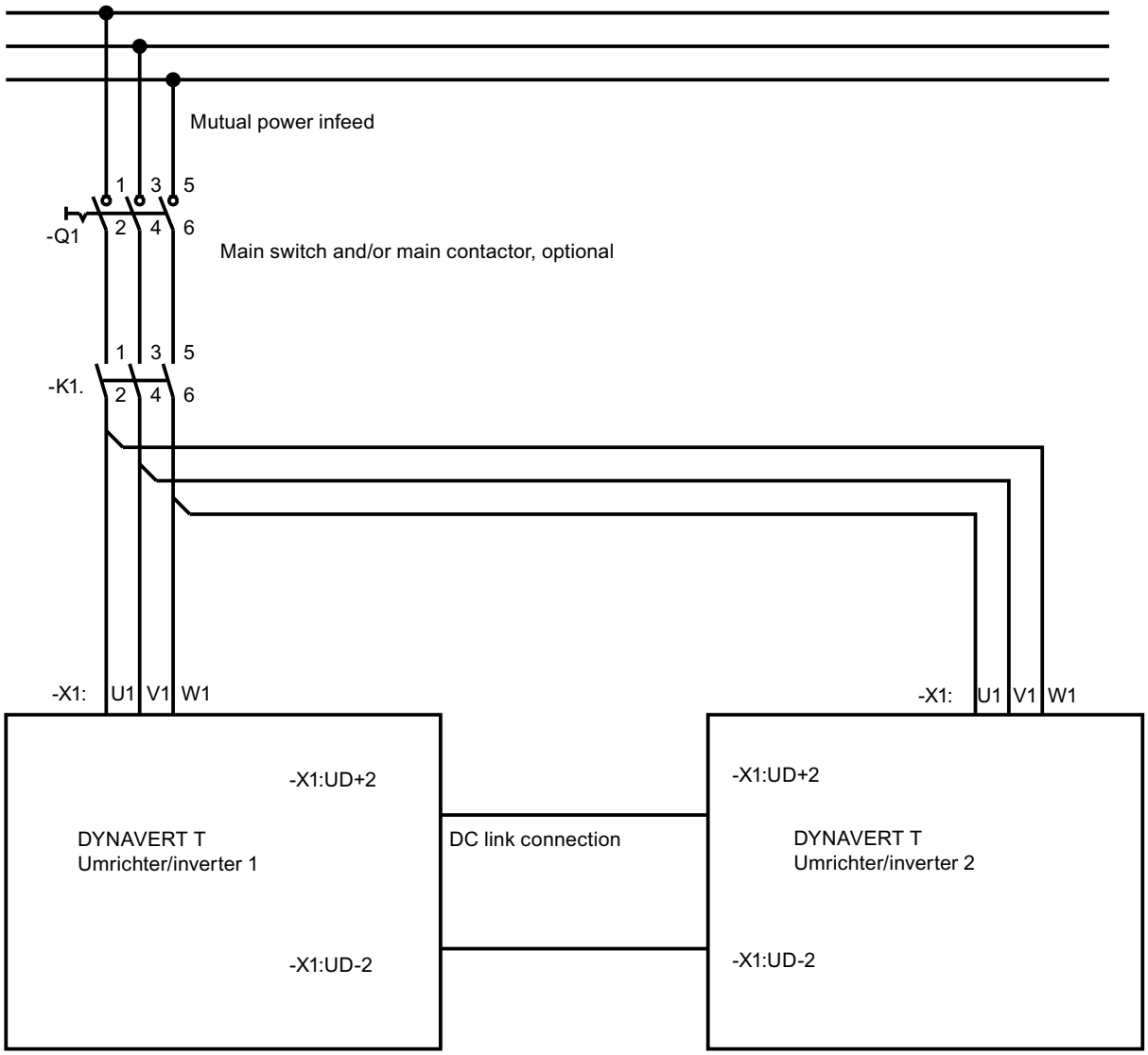

Figure 10-3 DC network

Please observe the following:

- Inverter 1 and Inverter 2 must be the same type.
- Connect both inverters to the mains power using a common supply line.
- Operate the mains power feed-in current of each inverter at maximum 75% of the rated current.
- The mains power supply connection cables from –K1:2, 4, 6 to both inverters must be the same length and have the same cross-section.
- You can use a normal cable to connect the DC link, e.g. H07VK in the cabinet, or NYY outside the cabinet.

- Design the cross section according to the current load.
  - DC link current = 1.3xmains current.
  - Lay both lines parallel with as small as possible distance from each other.
  - Bind the H07VK cables together using cable ties.
- For both inverters, change the parameter "P-INVERTER DATA/Brake"from "Off" to "R-Supply".
  - Use a braking device if the overall drive for braking flywheels can generate electricity for both inverters.
  - In this case, configure the inverter with brake resistor to "On".

NOTICE
Destruction of the inverters If you use one of the following configurations without consulting the factory, the inverter can be destroyed: • Two different inverters • More than two inverters • More than 75% mains power feed • Only one mains power connection. • DC network for cabinet units. Check the design with DC network exactly. Consult the factory for this.

10.9 External display

An external display can optionally be connected. The external display with the item number L0296033 has the same functionality as the internal display.

Further information can be found in the sections "Connection for optional external display with RS 485" (Page 107) and "Installing external display" (Page 48).

10.10 RFI suppression filter, category C1 (class B)

Use an RFI suppression filter, category C1 (class B), in the inverters if necessary. For more detailed information, refer to section "EMC" (Page 37).

From the unit designation you can identify whether you have a unit with the option RFI suppression filter category C1 (class B). In this case, the rating plate is stamped as follows ". 2...-.....-....B....".
Refer to section "Type designations" (Page 27) for more detailed information.

The dimensions are unchanged for compact devices. The dimensions of cabinet units increase if an RFI suppression filter category C1 (class B) is installed. Additional data is provided in the unit documentation.

10.11 Strengthened du/dt filter

A strengthened du/dt filter is available as an option.

See also

Dimensioning maximum motor cable length (Page 59)

10.12 Sine-wave filter

Note the following information for the operation of a sine-wave filter

A sine-wave filter is available as an option for the motor power supply.
It must be noted that sine-wave filters are only designed for the nominal clock frequency. Therefore the parameter "f-pulse min" under "P-INVERTER DATA" must always be set to the nominal clock frequency.

NOTICE
Overheating of the sine-wave filter If the clock frequency drops to below the nominal clock frequency of the sine-wave filter, the filter can overheat. The equipment will be damaged as a result. For this reason, the parameter "f-pulse min" under "P-INVERTER DATA" must always be set to the nominal clock frequency.

10.13 Additional mains power protection chokes

You can expand a inverter with an additional mains power protection choke. Use an additional choke if the input side mains power shows a large unbalanced load due to different voltage on L1, L2 and L3 or if the mains power or if the mains power already has harmonics. In this case, please contact the Service Center.

10.14 Profibus DP

You can purchase a Profibus circuit board as an accessory. The Profibus circuit board is installed under the grey plastic cover. The circuit board can be retrofitted. You recognize from the description "… *Type code* _ _ _ _ P _" on the rating plate that a Profibus circuit board has been integrated.

More details about the circuit board and the Profibus parameters can be found in the separate Profibus description.

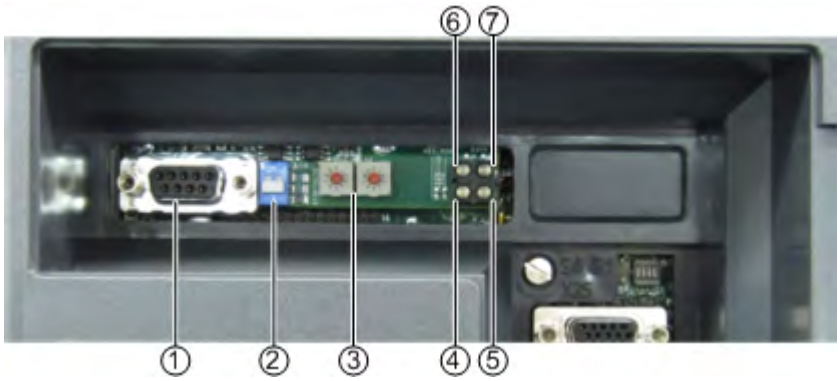

① PROFIBUS connection
② Switch for terminating resistor
③ PROFIBUS address, configurable
④ LED "bus diagnostics"
⑤ LED "Offline"
⑥ Unused LED
⑦ LED "Online"

Figure 10-4 Profibus circuit board

Table 10-3 Profibus circuit board - external elements

component	Function	
LED "Status" (only just visible under the grey cover)	Flashing red at different frequencies	Hardware error on the Profibus circuit board: contact Customer Service.
	Flashing green at 1 Hz, 0.5 s on, 0.5 s off	Initialization of the Profibus circuit board OK
	Flashing green at 2 Hz, 0.25 s on, 0.25 s off	Initialization of the Profibus circuit board has errors: contact Customer Service.
LED "Online"	This green LED lights if the bus connection is OK.	
LED "Offline"	This red LED lights if the bus connection is interrupted. Check the external bus configuration.	
PROFIBUS connection	Sub-D female connector for Profibus	
Switch for terminating resistor	A bus line must be terminated with a terminating resistor. Note that a terminating resistor can also be present in the connector and select the switch position accordingly. Switch up = resistor On. Only one terminating resistor is permitted at the end of a Profibus line.	
Available PROFIBUS addresses	You can set the Profibus address using the software as follows: A value from 0 to 125 can be set under "P-INTERFACE/P-Fieldbus/P-Profibus/Modbus/P-Profibus/BUS address". If you specify the value 0, the address will be set by the hardware. In this case, set an address in the range 0 to 99 using a screwdriver.	
LED "bus diagnostics"	Flashing at 1 Hz, 0.5 s On, 0.5 s Off	Error in the input/output configuration
	Flashing at 2 Hz, 0.25 s On, 0.25 s Off	Error in the length of the Profibus telegram
	Flashing at 4 Hz, 0.12 s On, 0.12 s Off	Error in the initialization of the Profibus
	Off	No bus fault

10.15 Modbus RTU

You can purchase a Modbus board as an accessory. The Modbus board is installed under the plastic cover. The board can be retrofitted. You recognize from the description "… *Type code* _ _ _ _ M _" on the rating plate that a Modbus board has been integrated.

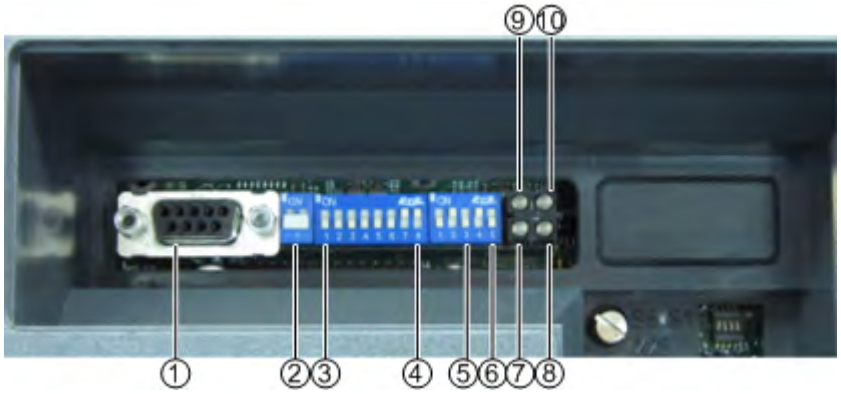

① Modbus connection
② Switch for terminating resistor
③ DIL switches 1 - 7: Modbus address, configurable
④ DIL switches 8, 1, 2: baud rate, configurable
⑤ DIL switches 3, 4: parity, configurable
⑥ DIL switch 5: interface type, configurable
⑦ LED "Status Hardware Settings"
⑧ LED "Bus ready"
⑨ LED "Processing"
⑩ LED "Bus error"

Figure 10-5 Modbus board

Table 10-4 Profibus circuit board - external elements

component	Function	
LED "Status Hardware Settings"	Red, lit	DIL switches are set to "not active" status (all set to "off" or impermissible values)
	Green, lit	DIL switch settings changed by software.
	OFF	DIL switch settings are used and are OK.
LED "Bus ready"	Green, lit	bus OK, normal operation
	Red, lit	Bus error, timeout
	OFF	Board has not been correctly initialized
LED "Processing"	Flashing green	Board receives a request and produces a response
	OFF	Board is not currently processing any requests
LED "Bus error"	Red, lit	Bus error
	OFF	Normal operation or circuit board not initialized
Modbus connection	Sub-D female connector for Modbus	

component	Function	
Switch for terminating resistor	A bus line must be terminated with a terminating resistor. A terminating resistor can be fitted in the connector. Select the switch position accordingly. Switch up = resistor On 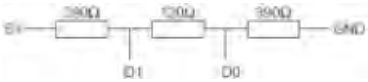 	
Available Modbus addresses 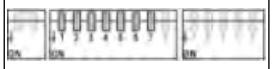	You can set the Modbus address using the software as follows: A value from 0 ... 247 can be set under "P-INTERFACE/P-Fieldbus/P-Profibus/Modbus/P-Modbus RTU/BUS address". If you specify the value 0, the address will be set by the hardware. In this case, set a binary address from 1 to 127 with the DIL switches. (Switch 1 is MSB, switch 7 is LSB)	
Configurable baud rate 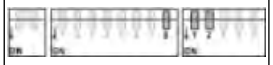	You can set the baud rate using the software under "P-INTERFACE/P-Fieldbus/P-Profibus/Modbus/P-Modbus RTU/Baudrate". If you specify the value 0 under "P-INTERFACE/P-Fieldbus/P-Profibus/Modbus/P-Modbus RTU/BUS address", then the hardware will set the baud rate. Set the binary baud rate according to the following list: • 000: not available • 001: 1200 • 010: 2400 • 011: 4800 • 100: 9600 • 101: 19,200 (standard for RTU) • 110: 38.400 • 111: 57.600	
Configurable parity 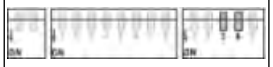	You can set the parity using the software under "P-INTERFACE/P-Fieldbus/P-Profibus/Modbus/P-Modbus RTU/Parity". If you specify the value 0 under "P-INTERFACE/P-Fieldbus/P-Profibus/Modbus/P-Modbus RTU/BUS address", then the hardware will set the parity. Set the binary parity according to the following list: • 00: not available • 01: none (standard for RTU) • 10: even • 11: odd	
Configurable interface type 	Set this switch according to the interface you want to use. • 0: RS 485 • 1: RS 232	
LED "Status" (above the DIL switches, only visible if the blue cover is removed)	Flashing red at different frequencies	Hardware error on the Modbus board: Contact the service department.
	Flashing green at 1 Hz, 0.5 s on, 0.5 s off	Initialization of the Modbus board OK
	Flashing green at 2 Hz, 0.25 s on, 0.25 s off	Initialization of the Modbus board has errors: Contact the service department.

Table 10-5 Pin assignment of the Modbus connection with Sub-D connector

Pin	Designation	Function
Enclosure	Shield	Cable shield
1	-	Not used
2	RS 232 - TX	Signal (transmit)
3	RS 232 - RX	Signal (receive)
4	-	Not used
5	GND	Signal ground
6	+ 5 V	Supply voltage
7	RS 485 D0	-
8	RS 485 D1	-
9	-	Not used

Modbus connection Sub-D

10.16 Modbus TCP

You can purchase a Modbus TCP board as an accessory. The Modbus board is installed under the plastic cover. The board can be retrofitted. You recognize from the description "… *Type code* _ _ _ _ T _" on the rating plate that a Modbus TCP board has been integrated.

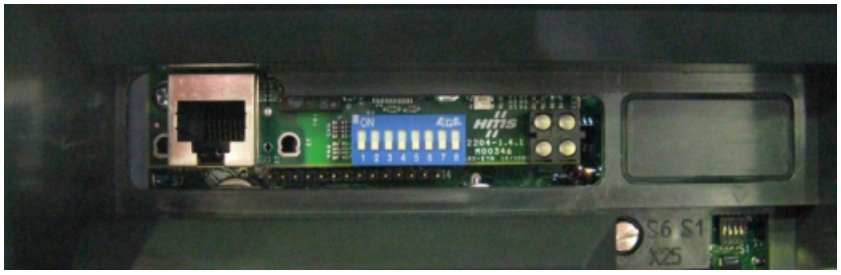

Figure 10-6 Modbus TCP board

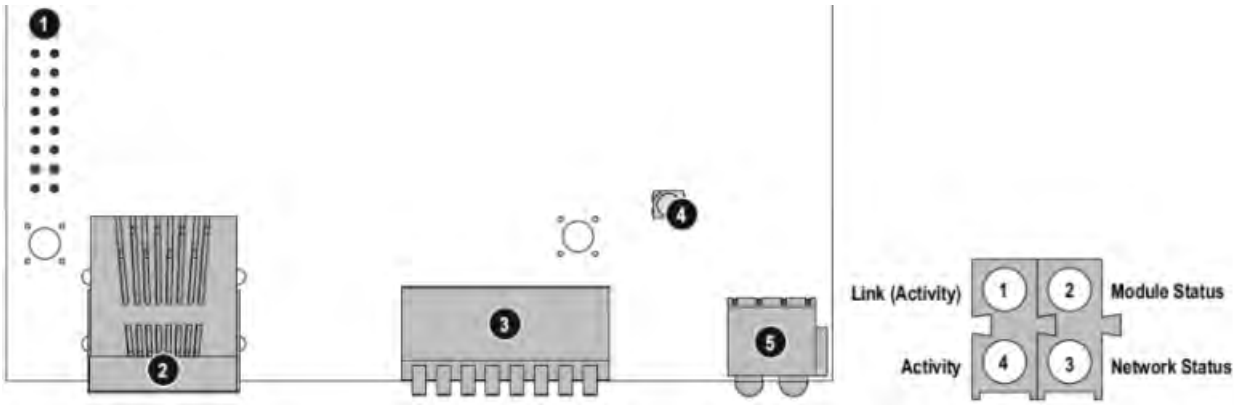

(1) Internal bus connection
(2) Ethernet connection socket RJ45
(3) Configuration switch
(4) Anybus Watchdog
(5) Status LEDs

Figure 10-7 Modbus TCP board

Table 10-6 Modbus TCP board - external elements

Component	Function	
LED 1 "Link (Activity)"	Off	No connection found
	Green, lit	Connection found
LED 2 "Module Status"	Off	No power supply
	Flashing green (1 Hz)	IP address not set via the configuration switch
	Flashing red (1 Hz)	Invalid MAC address (internal error)
	Flashing red (2 Hz)	Ethernet configuration was not able to be loaded from the FLASH
	Flashing red (4 Hz)	Internal error (fatal)
	Red	Already assigned IP address found
LED 3 "Network Status"	Flashes n times	The number of flashing signals of this LED corresponds to the number of existing Modbus/TCP connections
LED 4 "Activity"	Flashing green	Data is being received or sent
Modbus connection	Ethernet connection socket RJ45	
Configuration switch 1 2 3 4 5 6 7 8 ON (MSB) (LSB)	You can set the TCP/IP settings via the software as follows: IP address under "P-INTERFACES/P-Fieldbus/P-Profibus/Modbus/P-Modbus TCP/IP" Sub-Net under "P-INTERFACES/P-Fieldbus/P-Profibus/Modbus/P-Modbus TCP/SN" Gateway under "P-INTERFACES/P-Fieldbus/P-Profibus/Modbus/P-Modbus TCP/GW" If you enter the value 0-0-0-0 for the IP address, then the following standard values are used, the IP address is completed by the hardware: IP address: 192.168.0.x (x = value at the configuration switch) Gateway: 0.0.0.0 Subnet: 255.255.255.0 At the configuration switch, the last byte of the IP address is set as binary number. The set IP address in the example of the diagram on the left is: 192.168.0.42	

Ethernet

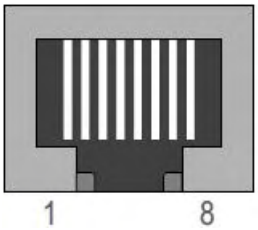

Figure 10-8 RJ45 standard connection socket

Table 10-7 RJ45 pin assignment

Pin	Signal	Remark
1	TD+	-
2	TD-	-
3	RD+	-
4	-	Normally not used; in order to prevent falsification of the signals, these pins are connected with one another and connected via a filter circuit on the module with PE.
5	-	
6	RD-	-
7	-	Normally not used; in order to prevent falsification of the signals, these pins are connected with one another and connected via a filter circuit on the module with PE.
8	-	

10.17 Water cooling

10.17.1 General information about water cooling

Cabinet units can optionally be purchased with water cooling. From the type designation 2T..-7… you can identify that a unit is equipped with water cooling. Water cooling is adapted to the existing conditions, Further information can be found in the order-related documentation.

The "Water cooling" section describes the design of the direct water cooling with open cooling circuit. Recooling of the coolant is not performed. Provide corresponding cooling of the water on-site.

10.17.2 Direct water cooling diagram

Structure

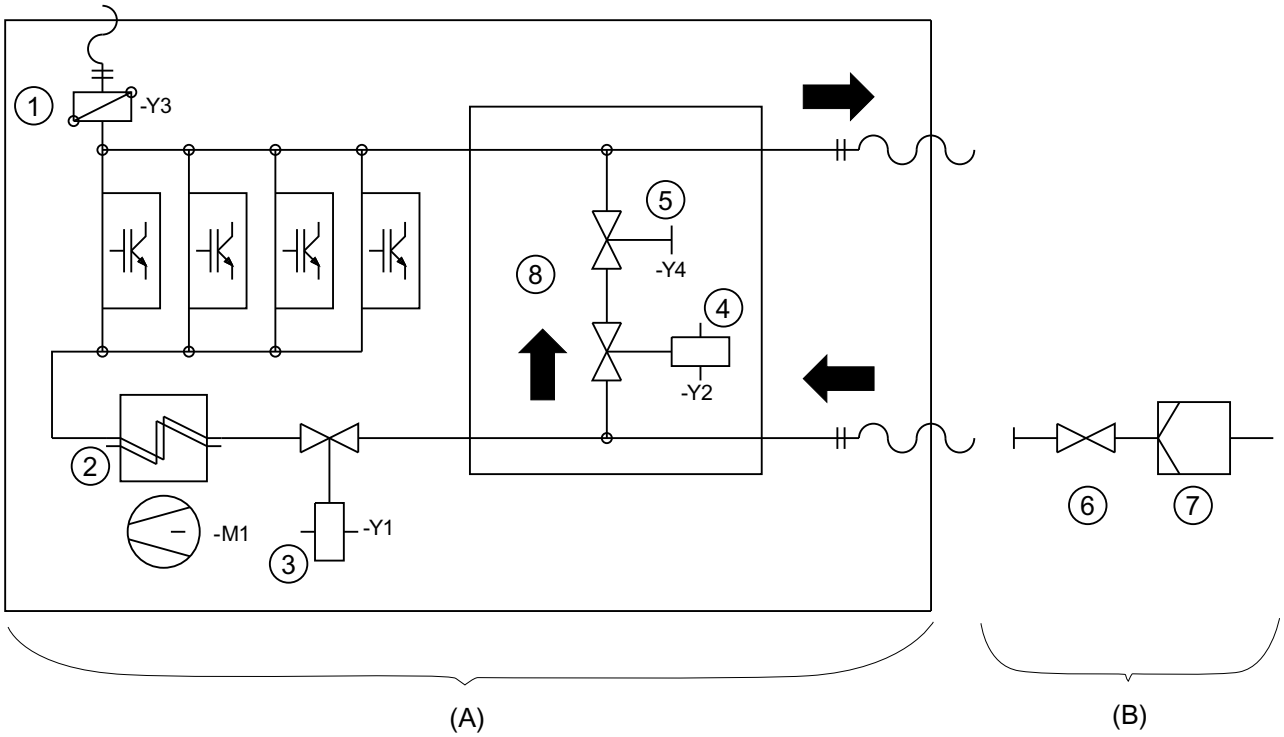

(A) Components in the inverter cabinet
(B) Components provided by the customer
① Ventilation
② Air / water heat exchanger with fan for interior
③ Electromagnetic valve NC
④ Electromagnetic valve NO
⑤ Stop valve, regulation of the flow rate
⑥ Flow rate regulation valve
⑦ Filter
⑧ Bypass - The version is optional

Figure 10-9 Diagram - Direct water cooling

10.17.3 Connecting water cooling

Procedure

- Connect the water cooling to the three low-pressure hoses which are installed approx. 2 m above the bottom edge of the cabinet. The hoses are labeled as follows:
  - Inlet
  - Return flow
  - Ventilation
- Install a fine filter with approx. 50 µm mesh size on-site before the inverter.

10.17.4 Venting the water cooling

Procedure

- If counterpressure builds up in the return line, vent the water cooling.
- Also vent the water cooling if it is operated in an enclosed system.

1. Disconnect the inverter before the cooling from the power supply and secure it against being switched on again.
2. Open the solenoid valve +H1.K2-Y1 to vent the water cooler.
   Proceed as follows:
   - Open the isolating blade terminals +H1.K1-X5 (or X4):12 and ...:13.
   - At terminals +H1.K1-X5 (or X4):11 and ...:14 connect an auxiliary voltage AC 230 V.
   - Open the water supply.
   - Open the manual valve +H1.K2-Y3 to vent until no more air exits. The valve is located on the top side at the back on the left.

- Hose bushings and hose clamps are required to establish the connection:

Table 10-8 Hose sizes

Hose sizes	½ "	¾ "	1 "	1 ½ "
Outer hose diameter	24 mm	30 mm	37 mm	51 mm

10.17.5 Decommissioning and shutdown

Procedure

- In the case of long shutdown or decommissioning of the inverter, drain the water cooling. You can find further information in the documentation 4BS0698.
- Note that putrefaction products are produced if the cooling water does not flow and that damage due to frost occurs if the unit is stored at temperatures below 0 °C.

NOTICE
Frost damage Material damage occurs if the water cooling is exposed to frost without being drained. Drain the system in order to avoid damage. Disconnect the hoses from the connection points. Proceed as described for the venting. For complete purging, blow compressed air into the supply hose while the venting valve is closed until no more water exits.

The water cooling system is drained before the inverters are shipped by the manufacturer.

10.17.6 Cooling water additives for the closed inverter cooling with cooling unit (optional)

Use a cooling water additive for the closed cooling system of the inverter.

Siemens recommends the agent "Antifrogen N" made by Clariant as a cooling water additive. The concentration of this additive can be adjusted to provide the required level of frost protection.
A minimum concentration of 20 % by volume provides anti-freeze protection down to - 10 °C.
An Antifrogen / water mixture of 1:2 provides anti-freeze protection down to - 20 °C.

Unpolluted water mixed with a minimum concentration of 20 % by volume Antifrogen N prevents the growth of microorganisms and the formation of algae.

If you need more detailed information and recommendations regarding cooling water additives, please refer to your order-specific inverter documentation. For further information, please refer to document 4BS0698.

Diagnostics, faults and warnings 11

For your personal safety and in order to prevent material damage, follow the instructions given in section "Safety instructions" (Page 13), especially section "Information about personal protection" (Page 16). Observe all the safety-related instructions in your product documentation. Pay particular attention to the safety notices on the product itself.

Every inverter is subject to individual inspection and warm up at the factory. Therefore errors in the device during the initial commissioning can be almost ruled out. In most cases, faults usually originate from the peripherals such as incorrect wiring or missing agreement for the respective application.

The most frequent causes of errors during the initial commissioning are shown below:

Table 11-1 Error causes and rectification

Errors	Possible causes	Fault rectification
All three LEDs on the display, i.e. "READY", "WORKING" and "FAULT" are not lit.	There is no voltage at the inverter.	Measure the input voltage at –X0:U1, V1, W1.
The "READY LED lights. The "WORKING" and "FAULT" LEDs are not lit. The inverter cannot be started.	The On command does not arrive.	Trace the path to the inverter.
	The On command you selected is not preselected.	Check the parameter assignment.
	-	Has the "Local" or "Remote" option been configured correctly?
The "WORKING LED lights. The "READY" and "FAULT" LEDs are not lit. The inverter / motor does not operate satisfactorily.	-	Have you performed the commissioning according to the "Commissioning" (Page 71) section?
	-	Perform the "Auto-Tuning" again.
The "FAULT" LED lights. The "READY" and "WORKING" LEDs are not lit.	-	The error message is shown on the display in plain text. You can also invoke the event log. For additional information, refer to the section titled "Reading event log" (Page 159). Siemens provides a list with all messages which are shown on the display and possible remedies on the Internet.

11.1 Reading event log

If a fault occurs, the event log of the inverter stores the following data:

- Which error has occurred?
- With parallel-connected inverters:
  In which system has the fault occurred?

- Data and time of the error event
- Various actual values such as, e.g. setpoint, motor current, motor voltage, motor frequency etc.

These data are stored for the last 64 errors. The event number 01 is the most recent error.

Procedure

Read the event log using the "IMS" software.

You can also read these data on the display. Proceed as follows:

1. Press <I> and then the <down arrow> until "I-MEMORY" is shown on the screen.
2. Press <Return> to reach the first event, e.g. "I-Memory/01:Flt>Undervoltage".
   If you press <Return> again, you can view all the data stored for this event.
3. Press <S> to return.

Read out all data of the last event using the software "IMS" before you contact the Service Center for assistance with an error message. In this way, you significantly simplify the error localization.

Service & Support

A

A.1 Siemens Industry Online Support

Details regarding the design of this device and the permissible operating conditions are described in these instructions.

On-site service and spare parts

If you wish to request on-site service or if you require spare parts, please contact your local sales partner who establishes the contact to the responsible service center.

Technical queries or additional information

If you have any technical queries or you require additional information, please contact the Siemens Service Center.

Please have the following data ready:

- Order number
- Serial number

You can find this data on the rating plate of the device.

Answers to frequently asked questions and the possibility of sending your questions to the service department can be found here (http://www.siemens.com/automation/support-request).

You can find your local contact partner here (Link: http://support.automation.siemens.com/WW/view/en/16604999).

You can also call the following numbers directly during local working hours to reach a contact partner who speaks the corresponding national language.

Contact to central technical support

Europe and Africa

TEL +49 911 895 7222
FAX +49 911 895 7223
support.automation@siemens.com

Americas

TEL +1 423 262 5710
FAX +1 423 262 2231
support.america.automation@siemens.com

Asia/Australia/Pacific

+86 10 6475 7575
+86 10 6474 7474
support.asia.automation@siemens.com

A.2 Contacts in Ruhstorf an der Rott location (Germany)

Siemens AG

P.O. Box 1164
94095 Ruhstorf

Hans-Loher-Straße 32
94099 Ruhstorf

Germany

+49 8531 39 554
24-hour hotline:
+49 8531 39 222
0.06 €/min. from land lines of the German Telekom, mobile phone prices may differ.
+49 8531 39 569
Technical support: driveservice.rhf.de@siemens.com
Spare parts: drivespares.rhf.de@siemens.com
Repair: driverepair.rhf.de@siemens.com

Spare parts on the Internet:

Spares on Web (www.siemens.com/sow)

Quality documents

B

SIEMENS

EG-Konformitätserklärung / EC declaration of Conformity

(nach der EG-Richtlinie 2006/95/EG, NSR) (in accordance with the EC Directive 2006/95/EC)

Hersteller/Manufacturer:	Siemens Aktiengesellschaft	
	Sector Industry Drive Technologies Large Drives	DT LD
Anschrift/Address:	Postfach 1164	Hans-Loher-Str. 32
	D-94095 Ruhstorf a. d. Rott	D-94099 Ruhstorf a. d. Rott

Produktbezeichnung/Product designation: Sinamics G180

Das bezeichnete Produkt stimmt mit den Vorschriften folgender Europäischer Richtlinien überein:

2006/95/EG Richtlinie des Europäischen Parlaments und des Rates vom 12.Dezember 2006 zur Angleichung der Rechtsvorschriften der Mitgliedsstaaten betreffend elektrische Betriebsmittel zur Verwendung innerhalb bestimmter Spannungsgrenzen

The product is in accordance with the specifications of the following European directives.

2006/95/EC Directive of the European Parliament and of the Council of 12 December 2006 on the harmonisation of the laws of Member States relating to electrical equipment designed for use within certain voltage limits

Wir bestätigen die Konformität des oben genannten Produktes mit den Normen:

We confirm conformity of the product indicated above with the standards:

EN 61800-5-1: 2007

Anbringung der CE-Kennzeichnung / affixing of the CE-marking: Typenschild/Type plate

Nürnberg, den 29.04.2013

Siemens Aktiengesellschaft

i.V. ..... Unterschrift/Signature
Schwimmbeck,
Leitung Entwicklung I DT LD AP CD OPS R&D
Head of Research & Development I DT LD AP CD OPS R&D

i.V. ..... Unterschrift/Signature
Schöppler,
Produktsicherheitsbeauftragter I DT LD AP CD
Product safety representative I DT LD AP CD

Diese Erklärung bescheinigt die Übereinstimmung mit den genannten Richtlinien, ist jedoch keine Beschaffenheits- oder Haltbarkeitsgarantie nach §443 BGB.

This declaration confirms conformity with the guidelines mentioned. However, this is neither a quality nor a durability warranty.

Die Sicherheitshinweise der mitgelieferten Produktdokumentation sind zu beachten.
Please take notice of the safety notes supplied with the product documentation.

Siemens Aktiengesellschaft: Chairman of the Supervisory Board: Gerhard Cromme; Managing Board: Peter Loescher, Chairman, President and Chief Executive Officer; Roland Busch, Brigitte Ederer, Klaus Helmrich, Joe Kaeser, Barbara Kux, Hermann Requardt, Siegfried Russwurm, Peter Y. Solmssen, Michael Suess; Registered offices: Berlin and Munich, Germany; Commercial registries: Berlin Charlottenburg, HRB 12300, Munich, HRB 6684; WEEE-Reg.-No. DE 23691322

I DT LD Copyright (©) SIEMENS AG 2012 All rights reserved VQ 1013-1-1210 Seite 1 von 8

Figure B-1 Declaration of conformity of Sinamics G180 to low-voltage directive (4Z0005A-001)

SIEMENS

EG-Konformitätserklärung / EC declaration of Conformity

(nach der EG-Richtlinie 2004/108/EG, EMV-Richtlinie) (in accordance with the EC Directive 2004/108/EC, EMC Directive)

Hersteller/Manufacturer:	Siemens Aktiengesellschaft	
	Sector Industry Drive Technologies Large Drives	DT LD
Anschrift/Address:	Postfach 1164	Hans-Loher-Str. 32
	D-94095 Ruhstorf a. d. Rott	D-94099 Ruhstorf a. d. Rott

Produktbezeichnung/Product designation: Sinamics G180

Das bezeichnete Produkt stimmt mit den Vorschriften folgender Europäischer Richtlinien überein:

2004/108/EG **Richtlinie des Europäischen Parlaments und des Rates vom 15.Dezember 2004 zur Angleichung der Rechtsvorschriften der Mitgliedsstaaten über die elektromagnetische Verträglichkeit und zur Aufhebung der Richtlinie 89/336/EWG**

The product described is in accordance with the specifications of the following European Directives:

2004/108/EC **Directive of the European Parliament and of the Council of December 15, 2004, on the harmonization of the laws of Member States relating to electromagnetic compatibility and to the cancellation of the Directive 89/336/EEC**

Wir bestätigen die Konformität mit den zutreffenden Anforderungen folgender Normen:
We confirm conformity of the product indicated above with the following standards:
EN 61800-3:2004 + A1:2012

Hinweis: Angaben zur EMV-gerechten Installation und für den bestimmungsgemäßen Betrieb und weitere zutreffende Hinweise in der mitgelieferten Produktdokumentation sowie die jeweils zutreffenden Anschlußbedingungen müssen beachtet werden.

Note: Instructions relating to the correct EMC installation and the intended operation as well as further notes in the supplied product documentation and the respective follow-up conditions must be adhered to!

Anbringung der CE-Kennzeichnung / affixing of the CE-marking: Typenschild/Type plate

Ruhstorf a. d. Rott, den 29.04.2013

Siemens Aktiengesellschaft

i.V.	i.V. .....
Schwimmbeck, Unterschrift/Signature	Schöppler, Unterschrift/Signature
Leitung Entwicklung I DT LD AP CD OPS R&D	Produktsicherheitsbeauftragter I DT LD AP CD
Head of Research & Development I DT LD AP CD OPS R&D	Product safety representative I DT LD AP CD

Diese Erklärung bescheinigt die Übereinstimmung mit den genannten Richtlinien, ist jedoch keine Beschaffenheits- oder Haltbarkeitsgarantie nach §443 BGB. This declaration confirms conformity with the guidelines mentioned. However, this is neither a quality nor a durability warranty.
Die Sicherheitshinweise der mitgelieferten Produktdokumentation sind zu beachten.
Please take notice of the safety notes supplied with the product documentation.

Siemens Aktiengesellschaft Chairman of the Supervisory Board: Gerhard Cromme; Managing Board: Peter Loescher, Chairman, President and Chief Executive Officer; Roland Busch, Brigitte Ederer, Klaus Helmrich, Joe Kaeser, Barbara Kux, Hermann Requardt, Siegfried Russwurm, Peter Y. Solmssen, Michael Suess. Registered offices: Berlin and Munich, Germany; Commercial registries: Berlin Charlottenburg, HRB 12300, Munich, HRB 6684; WEEE-Reg.-No. DE 23691322

 Copyright (©) SIEMENS AG 2012 All rights reserved

Figure B-2 Declaration of conformity of Sinamics G180 to EMC directive (4Z0004D-001)

SIEMENS

SIL-Konformitätserklärung / SIL declaration of Conformity

(Funktionale Sicherheit nach IEC 61508) (Functional safety according to IEC 61508)

Hersteller/Manufacturer: Siemens Aktiengesellschaft
Sector Industry Drive Technologies Large Drives I DT LD
Anschrift/Address: Postfach 1164 Hans-Loher-Str. 32
D-94095 Ruhstorf a. d. Rott D-94099 Ruhstorf a. d. Rott

Produktbezeichnung/Product designation: Sinamics G180

mit Funktion Thermischer Motorschutz/with Function Thermistor Motor Protection

mit Peripherie 2: Option G03, S01, S02, S03, S04, S08, S09, S11, S12,
Artikelnummer L0279043 ab Index E05 und L0279031 ab Index D04 oder
mit Peripherie 4: Option G05, G08, S31,
Artikelnummer L0353143 ab Index A01 und L0279031 ab Index D04

with Periphery 2: Option G03, S01, S02, S03, S04, S08, S09, S11, S12,
Number L0279043 beginning from index E05 and L0279031 from index D04 or
with Periphery 4: Option G05, G08, S31,
Number L0353143 beginning from index A01 and L0279031 from index D04

Das bezeichnete Produkt ist für den Einsatz in Schutzfunktionen entsprechend der IEC 61508 geeignet ist, wenn zugehörige Sicherheitshinweise beachtet werden.

The product is suitable for the use in safety-instrumented systems according to IEC 61508, if provided the relevant safety instructions are observed.

Die FMEDA ergibt folgende Parameter:

The FMEDA provides the following parameters:

Gerät/Product **Bestellnummer/Order No.**	**2T..-07/27…-…** **6SE010.-…..-….**	**2T/X..-77/87…-…** **6SE014/7/8.-…..-….**
Schutzfunktion/Safety Function	Thermischer Motorschutz - TMS/Termistor Motor Protection	
SIL	1	
Prüfintervall/	≤ 20 Jahre/years	
Gerätetyp/	A	
HFT	0 (einkanalige Verwendung/)	
PFH[h^{-1}] 1) Einkanalig/single channel	1,3973E-07	3,1267E-07
PFD_{avg} 2) Einkanalig/single channel	1,2249E-03	2,7390E-03
SFF [%]	86,63	90,79
λ_{du} [FIT]	262	459
λ_{dd} [FIT]	1102	2940
λ_s [FIT]	663	1686
λ_d [FIT]	1364	3399
$MTBF_d$ 3) [Jahre/years]	195,23	94,98

I DT LD Copyright (©) SIEMENS AG 2012 All rights reserved VQ 1013-1-1210 Seite 1 von 2

Figure B-3 Declaration of conformity, PTC input-SIL1, Sinamics G180, page 1 (4Z0046A-001)

SIEMENS

Zum Nachweis der Beurteilung des Geräts wird auf die 1.Ergänzung der EG-Baumusterprüfbescheinigungs-Nr.: PTB 07 ATEX 3057 der PTB Braunschweig verwiesen.

For confirmation of the device assessment refer to the first time updated certificate: Conformity to Type Notification No.: PTB 07 ATEX 3057 from PTB Braunschweig.

Diese Erklärung ersetzt bisher veröffentlichte Erklärungen und macht diese ungültig.

This declaration replaces former distributed declarations and makes them no longer valid.

Ruhstorf a. d. Rott, den 29.04.2013

Siemens Aktiengesellschaft

i.V .....
Schwimmbeck, Unterschrift/Signature
Leitung Entwicklung I DT LD AP CD OPS R&D
Head of Research & Development I DT LD AP CD OPS R&D

i.V .....
Schöppler, Unterschrift/Signature
Produktsicherheitsbeauftragter I DT LD AP CD
Product safety representative I DT LD AP CD

Diese Erklärung bescheinigt die Übereinstimmung mit den genannten Richtlinien, ist jedoch keine Beschaffenheits- oder Haltbarkeitsgarantie nach §443 BGB.
This declaration confirms conformity with the guidelines mentioned. However, this is neither a quality nor a durability warranty.

Die Sicherheitshinweise der mitgelieferten Produktdokumentation sind zu beachten.
Please take notice of the safety notes supplied with the product documentation.

Siemens Aktiengesellschaft Chairman of the Supervisory Board: Gerhard Cromme; Managing Board: Peter Loescher, Chairman, President and Chief Executive Officer; Roland Busch, Brigitte Ederer, Klaus Helmrich, Joe Kaeser, Barbara Kux, Hermann Requardt, Siegfried Russwurm, Peter Y. Solmssen, Michael Suess; Registered offices: Berlin and Munich, Germany; Commercial registries: Berlin Charlottenburg, HRB 12300, Munich, HRB 6684; WEEE-Reg.-No. DE 23691322

 Copyright (©) SIEMENS AG 2012 All rights reserved

Figure B-4 Declaration of conformity, PTC input-SIL1, Sinamics G180, page 2 (4Z0046A-001)

SIEMENS

SIL-Konformitätserklärung / SIL declaration of Conformity

(Funktionale Sicherheit nach IEC 61508) (Functional safety according to IEC 61508)

Hersteller/Manufacturer: Siemens Aktiengesellschaft
Sector Industry Drive Technologies Large Drives I DT LD
Anschrift/Address: Postfach 1164 Hans-Loher-Str. 32
D-94095 Ruhstorf a. d. Rott D-94099 Ruhstorf a. d. Rott

Produktbezeichnung/Product designation: Sinamics G180

mit Funktion Sicherer Halt / with Function Safe Torque Off (STO)

mit Peripherie 3: Option G04, Artikelnummer L0353143 ab Index A01 oder
mit Peripherie 4: Option G05, G08, S31, Artikelnummer L0353143 ab Index A01 und
Artikelnummer L0279031 ab Index D04

with Periphery 3: Option G04, Number L0353143 beginning from index A01 or
with Periphery 4: Option G05, G08, S31, Number L0353143 beginning from index A01 and
Number L0279031 beginning from index D04

Das bezeichnete Produkt ist für den Einsatz in Schutzfunktionen entsprechend der IEC 61508 geeignet ist, wenn zugehörige Sicherheitshinweise beachtet werden.

The product is suitable for the use in safety-instrumented systems according to IEC 61508, if provided the relevant safety instructions are observed.

Die FMEDA ergibt folgende Parameter: / The FMEDA provides the following parameters:

Gerät/Product **Bestellnummer/Order No.**	**2T..-07/27…-…** **6SE010.-…..-….**	**2T/X..-77/87…-…** **6SE014/7/8.-…..-….**
Schutzfunktion/Safety Function	Sicherer Halt/Safe Torque Off (STO)	
SIL	2	
Prüfintervall/Proof test interval	≤ 20 Jahre/years	
Gerätetyp/Device type	A	
HFT	0 (einkanalige Verwendung/single channel use)	
PFH[h^{-1}] 1) Einkanalig/single channel	9,3253E-08	2,6620E-07
PFH[h^{-1}] 1) Zweikanalig/dual channel	5,0635E-08	2,2358E-07
PFD_{avg} 2) Einkanalig/single channel	8,1690E-04	2,3319E-03
PFD_{avg} 2) Zweikanalig/dual channel	4,4356E-04	1,9586E-03
SFF [%]	86,63	90,79
λ_{du} [FIT]	262	459
λ_{dd} [FIT]	1102	2940
λ_s [FIT]	663	1686
λ_d [FIT]	1364	3399
$MTBF_d$ 3) [Jahre/years]	195,23	94,98

1) Die Werte sind nach IEC 61508 innerhalb des für SIL2 definierten Bereiches. / The values comply with SIL2 according to IEC 61508.
2) Wert ist nur gültig unter der Annahme einer mittleren Anforderungsrate von 1/Jahr. / Value only valid under assumption by an average demand of 1/year.
3) Gemäß Siemens SN29500 / According to Siemens SN29500

I DT LD Copyright (©) SIEMENS AG 2012 All rights reserved VQ 1013-1-1210 Seite 1 von 2

Figure B-5 Declaration of conformity, SIL2, Sinamics G180, page 1

SIEMENS

Zum Nachweis der Beurteilung des Geräts wird auf das Zertifikat M6A 13 05 81799 und den Technischen Bericht Nr. 717507358 des TÜV SÜD verwiesen.

For confirmation of the device assessment refer to certificate M6A 13 05 81799 and technical report no. 717507358 from TÜV SÜD.

Diese Erklärung ersetzt bisher veröffentlichte Erklärungen und macht diese ungültig.

This declaration replaces former distributed declarations and makes them no longer valid.

Ruhstorf a. d. Rott, den 21.05.2013

Siemens Aktiengesellschaft

i.V .....

Schwimmbeck, Unterschrift/Signature

Leitung Entwicklung I DT LD AP CD OPS R&D

Head of Research & Development I DT LD AP CD OPS R&D

i.V .....

Schöppler, Unterschrift/Signature

Produktsicherheitsbeauftragter I DT LD AP CD

Product safety representative I DT LD AP CD

Diese Erklärung bescheinigt die Übereinstimmung mit den genannten Richtlinien, ist jedoch keine Beschaffenheits- oder Haltbarkeitsgarantie nach §443 BGB.

This declaration confirms conformity with the guidelines mentioned. However, this is neither a quality nor a durability warranty.

Die Sicherheitshinweise der mitgelieferten Produktdokumentation sind zu beachten.
Please take notice of the safety notes supplied with the product documentation.

Siemens Aktiengesellschaft: Chairman of the Supervisory Board: Gerhard Cromme; Managing Board: Peter Loescher, Chairman, President and Chief Executive Officer; Roland Busch, Brigitte Ederer, Klaus Helmrich, Joe Kaeser, Barbara Kux, Hermann Requardt, Siegfried Russwurm, Peter Y. Solmssen, Michael Suess; Registered offices: Berlin and Munich, Germany; Commercial registries: Berlin Charlottenburg, HRB 12300, Munich, HRB 6684; WEEE-Reg.-No. DE 23691322

I DT LD Copyright (©) SIEMENS AG 2012 All rights reserved VQ 1013-1-1210 Seite 2 von 2

Figure B-6 Declaration of conformity, SIL2, Sinamics G180, page 2

Technical data

C

Read the technical data of this device on the rating plate.

Compact units with the type designation 2T?A-0… up to 2T?A-3… have two rating plates. One of these is on the exterior on the left side panel and the other is on the inside on the left side panel.

In the case of cabinet units, the rating plate is in the cabinet in which the display is installed. You can see the rating plate on the top left after opening the cabinet door.

You can find additional technical data for the inverter on your CD and on the Internet at Configurator for drive technology (https://eb.automation.siemens.com/goos/catalog/Pages/ProductData.aspx?regionUrl=/de&tree=CatalogTree&nodeid=10028832&autoOpenConfigId=7&kmat=SD&autoopen=false&language=en&activetab=#topAnch&activetab=config&).

You can also find the "DT Configurator" here () using the search function.

Other lists and instructions

The following descriptions can be downloaded from the website of the manufacturer:

- Operating instructions
- Parameterization instructions
- Message text on the display, for example error messages
- Profibus description
- Technical list
- Motor dimensioning
- Inverter Management Software (IMS)
- GSD files for Profibus

C.1 Technical data for transportation

Carefully observe the following environmental conditions for transport according to EN 6180-5-1, Class2K3 according to EN 60721-3-2:

Environmental conditions for inverter transport	
Atmospheric pressure	700 mbar … 1060 mbar, corresponds to max. 3000 m above sea level
Ambient temperature	- 25 °C … + 70 °C

Environmental conditions for inverter transport	
Humidity rating	Maximum relative humidity if the temperature of the inverter slowly increases by 40 K: 95 % Maximum relative humidity if the device is brought immediately from -25 °C to +30 °C: 95 % Maximum absolute humidity if the device is brought immediately from +70 °C to +15 °C: 60 g/m³
Vibrations	Max. ≤ 1 g or ≤ 3.5 mm amplitude or according to Class 2M1 according to DIN IEC 721, Part 3-2

C.2 Technical data for storage

The environmental conditions for storage according to EN 6180-5-1 for temperature, Class 1K4 and for relative humidity, Class 1K3 according to EN 60721-3-1 are specified as follows:

Environmental conditions for inverter storage	
Atmospheric pressure	860 mbar … 1060 mbar, corresponds to max. 1000 m above sea level
Ambient temperature	- 25 °C … + 55 °C
Humidity rating	5 % … 95 %, 1 g/m³ … 29 g/m³

C.3 Frame sizes of compact units

Please refer to the following diagrams and tables for the frame size of your inverter.

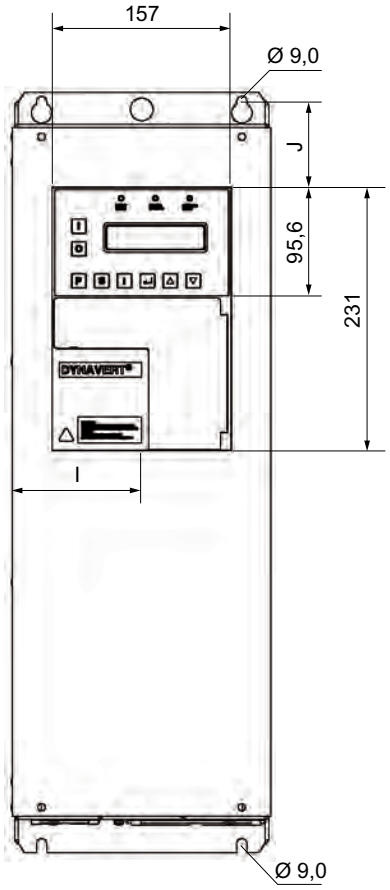

Compact device 1 dimension drawing

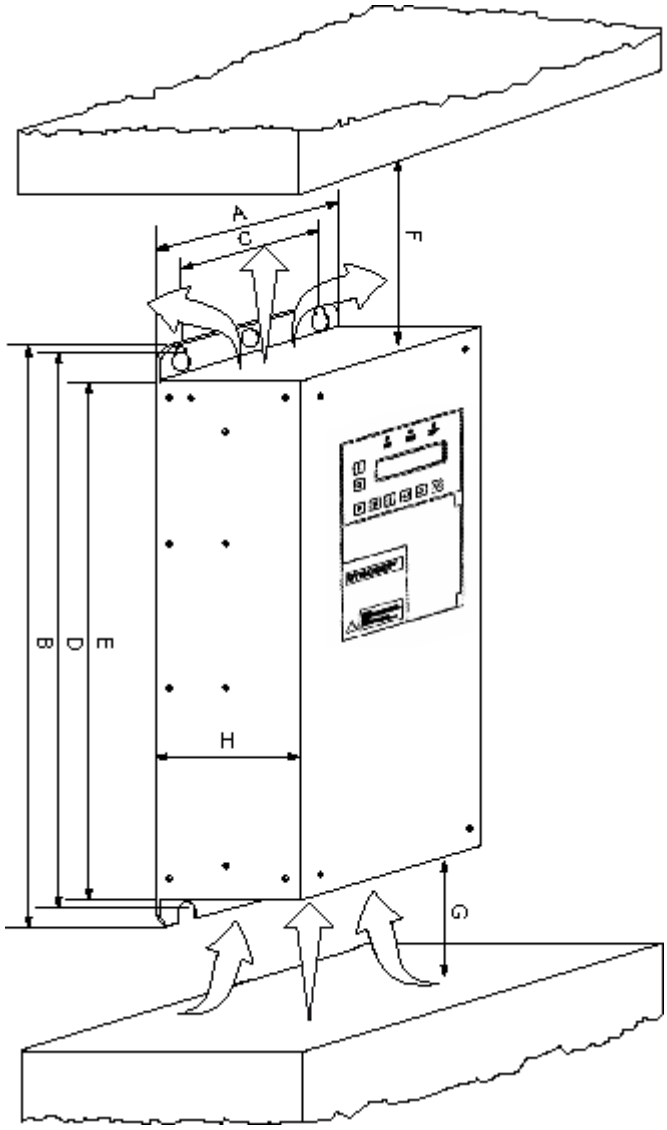

Compact device 2 dimension drawing

Table C-1 Dimensions of the different inverters in mm

Inverter type	A	B	C	D	E	F[1)]	G[2)]	H	I	J	BG[3)]
2T2A-07400-002 … 2T2A-07400-005 2T2A-07500-002 … 2T2A-07500-007	165	465	125	450	410	100	200	320	82.5	22.5	BG K1
2T2A-07400-007 … 2T2A-07400-011 2T2A-07500-011 … 2T2A-07500-015	165	565	125	550	510	100	200	320	82.5	22.5	BG K2
2T2A-07400-015 … 2T2A-07400-030 2T2A-07500-022 … 2T2A-07500-037 2T2A-07600-007 2T2A-07600-011 2T2A-07600-015 2T2A-07600-022	225	665	175	650	610	100	200	320	112.5	75	BG K3
2T2A-07400-037 … 2T2A-07400-055 2T2A-07500-045 … 2T2A-07500-075 2T2A-07600-030 … 2T2A-07600-075	350	775	300	750	710	100	200	320	255	70	BG K4
2T2A-07400-075 … 2T2A-07400-110 2T2A-07500-090 … 2T2A-07500-132 2T2A-07600-090 … 2T2A-07600-132	350	1.125	300	1.100	1.060	100	200	320	255	70	BG K5
2T2A-27400-075 … 2T2A-27400-110 2T2A-27500-090 … 2T2A-27500-132 2T2A-27600-090 … 2T2A-27600-132	350	1.538	300	1.490	1.460	100	200	345	255	70	BG K51
2T2A-07400-132 … 2T2A-07400-160 2T2A-07500-160 … 2T2A-07500-200 2T2A-07600-160 … 2T2A-07600-200	500	1.125	400	1.100	1.060	100	200	320	405	70	BG K6

1)	F = cooling air discharge area: Do not block this area.
2)	G = cooling air intake area: Do not block this area.
3)	BG = Frame size

C.4 Frame sizes of cabinet units

Please refer to the following table for the frame size of your inverter.

Table C-2 Inverter types and associated frame sizes

Inverter type	Frame size
2T3A-87401-200 … 2T3A-87401-315 2T3A-87501-250 … 2T3A-87501-400 2T3A-87601-250 … 2T3A-87691-400	BG SL2
2T3A-87401-400 2T3A-87501-500 2T3A-87601-500	BG SL21
2T3A-87401-500 … 2T3A-87401-630 2T3A-87501-560 … 2T3A-87501-800 2T3A-87601-560 … 2T3A-87691-910	BG SL3

The corresponding dimension drawings can be found in the following illustrations.

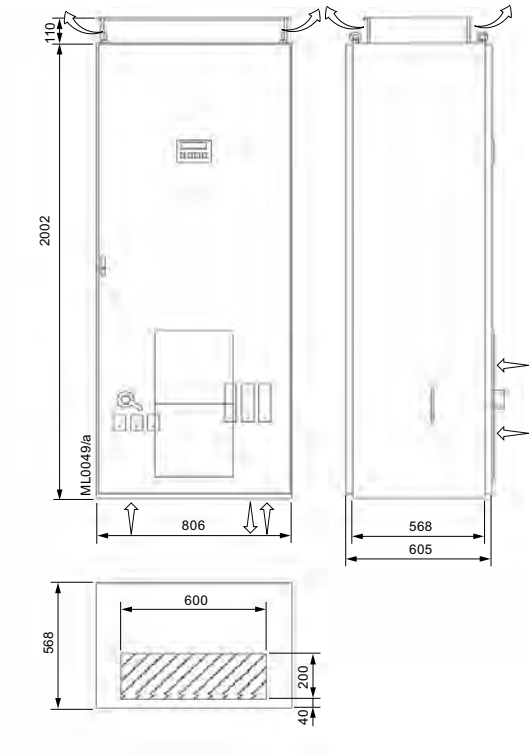

Dimension drawing BG SL2

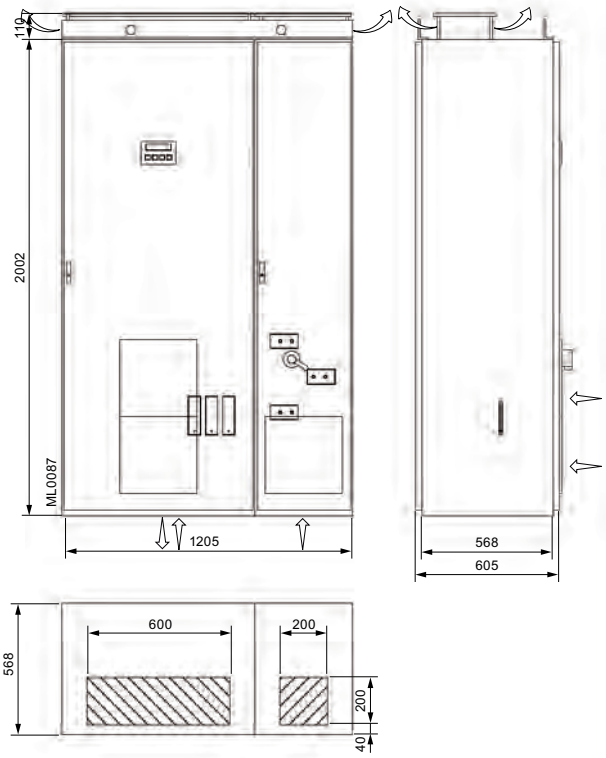

Dimension drawing BG SL21

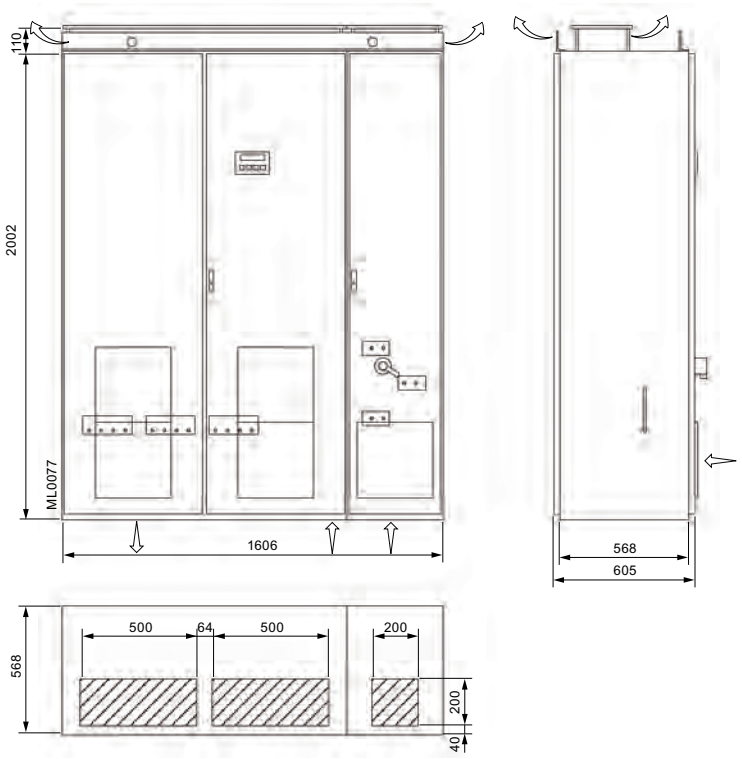

Figure C-1 Dimension drawing BG SL3

C.5 Technical data for operation

Make sure that the following environmental conditions for operation are fulfilled.

The inverters are designed for indoor installation.

- Class 3K3 environmental conditions in accordance with EN 60721
- Pollution degree 2
- Overvoltage category 3
- Degree of protection IP20 for compact units
- Degree of protection IP21 for cabinet units

Environmental conditions for the inverter application	
Atmospheric pressure	860 mbar … 1060 mbar, corresponds to max. 1000 m above sea level[1)]
Ambient temperature	0 °C … + 40 °C [1)]
Humidity rating	5 % … 85 %, 1 g/m³ … 25 g/m³

[1)] The units can be operated under different environmental conditions if derating is applied.

For further information, refer to section "Derating" (Page 181).
For further technical data, refer to the technical data sheet or the CD supplied with the product.

C.6 Tightening torques for power cables

Please refer to the table below for the torques for tightening power cable connections.

Note the information in section "Electrical connection" (Page 51).

Table C-3 Tightening torques for terminal and lug connections

Terminal UK6N, 8,2 mm wide	Terminal UK35, 15,2 mmwide	M6	M8	M10	M12	M16
1.5 … 1.8 Nm	3.2 … 3.7 Nm	9 Nm	22 Nm	44 Nm	75 Nm	106 Nm

Table C-4 Tightening torques for switch and contactor connections

M3 / 3,5	M4	M6	M8	M10	M12
1,2 Nm	1,8 Nm	4 Nm	6 Nm	20 Nm	45 Nm

C.7 Technical data of the control cable terminals

Red pins avoid mixing up the connectors. The control cable terminals are plug-in connections. You can unplug the plugged-in connections when disconnected from the power supply.

When installing cables and selecting the cabling materials, it is essential that you observe the information in sections "Safe isolation in accordance with EN 61800-5-1" (Page 97) and "Connecting the control cable" (Page 52).

The control cable terminals are color-coded:

- The green terminals on the far left contain all relay outputs and the optocoupler inputs at a separate potential.
- The black terminals contain the potential-free analog inputs and digital inputs which are electrically separated the same as the analog inputs.
- The white terminals contain the electrically separated analog outputs.

All external voltages can be connected together for controlling a PCS or PLC. To do this, jumper the ground terminals -X2:1 with -X2:51 and -X2:51 with -X2:71.

If you control the inverter using different devices, potential displacements occur which depend on the cable length used. Remove the jumpers for longer cables.

Technical data of the control cable terminals	
Conductor cross-section –X2	rigid / flexible: 0.5 mm² … 2.5 mm²
Relay outputs –X2:30 … 42	5 V … 250 V AC / 1 A, 15 AC 5 V … 30 V DC / 1 A > 30 V … 60 V DC / 120 mA > 60 V … 250 V DC / 60 mA
With peripheral board 3 or 4 only: Relay outputs –X2:43 … 49	Minimum switching load: 12 V / 100 mA

Technical data of the control cable terminals	
Digital inputs –X2:8 ... 16	Low: - 3 V … + 5 V High: 13 V … 32 V Floating Typically 12 mA for High
Analog inputs –X2:50 … 53	Voltage input 0 V … ± 10 V, 200 kΩ Terminal 52 and 54 or current input 0 mA or 4 mA*) … ± 20 mA, 100 Ω, Terminals 50 and 53
Supply voltages on potential of the analog inputs for diverse sensors:	Terminal 55: 24 V DC, max. 300 mA Terminal 56: 15 V DC, max. 150 mA Terminal 57: 10 V DC, max. 10 mA Terminal 58: -10 V DC, max. 10 mA
Digital inputs –X2:27, 28	Low: - 3 V … + 5 V High: 13 V … 32 V Floating on potential of the analog inputs Typically 2.4 mA for High
	Direct connection of PTC thermistors Reference potential for PTC thermistor: Terminal -X2:58 (- 10 V). The voltage over the PTC thermistor is approx. 2.5 V Can also be used as an f or n input.
Digital input –X2:29	Low: - 3 V … + 5 V, High: 13 V … 32 V Floating on potential of the analog inputs, typically 2.4 mA for High Can also be used as f or n input
Analog outputs –X2:60 … 63	With automatic changeover current or voltage, floating: Load < 300 Ω: 0 mA or 4 mA*) … 20 mA Load > 1 kΩ: 0 V … 10 V
Supply voltages on potential of the analog outputs:	Terminal 70: 24 V DC, max. 300 mA

*) 0 mA or 4 mA can be parameterized.

C.8 Technical data and identification of the PTC thermistor input at peripheral boards 2 and 4

PTC thermistor input - Data	
Application	For temperature monitoring of explosion-protected motors, type of protection "Increased safety" EX e according to DIN EN 50019 VDE 0170/0171 and "flameproof enclosure" Ex d according to DIN EN 50018 VDE 0170/0171 as well as normal motors outside a hazardous zone
Identification	EX II (2) GD
maximum number of sensors	6 sensors according to DIN VDE 0660 Teil 303
OK state	< 1.5 kΩ … 1.8 kΩ

PTC thermistor input - Data	
Overtemperature message	> 3.2 kΩ … 3.8 kΩ
Short-circuit in the sensor circuit	< 15 Ω … 25 Ω
Measuring circuit load	< 5 mW at R = 1.5 kΩ
Voltage in the sensor circuit	< 2 V at R = 1.5 kΩ
Current in the sensor circuit	< 1.5 mA at R = 1.5 kΩ
Voltage for measuring sensor break	11.6 V
Current for short-circuited sensor circuit	1.45 mA
Electrical design	Protective separation for 690 V to the other circuits according to EN 50178, EN 61800-5-1

Maximum cable length for PTC thermistor sensor circuit:	
Cross-section 2.5 mm²	2 × 500 m
Cross-section 1.5 mm²	2 × 300 m
Cross-section 0.5 mm²	2 × 100 m

The PTC input can be used for monitoring motors in the Ex-Zone. The inverter itself must not be installed in the Ex-Zone.

The PTC thermistor evaluation function can be deactivated by an internal switch. For this reason, carry out the test described in section "Testing the PTC thermistor shutdown function" (Page 141). If the result of the test is negative, contact the Service Center for advice.

C.9 Technical data of the direct water cooling

Technical data

Inverter type	Frame size
2T3A-77401-200 … 2T3A-77401-315 2T3A-77501-250 … 2T3A-77501-400 2T3A-77601-250 … 2T3A-77601-400	BG SW2
2T3A-77401-400 2T3A-77501-500 2T3A-77601-500	BG SW21
2T3A-77401-500 … 2T3A-77401-630 2T3A-77501-560 … 2T3A-77501-800 2T3A-77601-560 … 2T3A-77601-910	BG SW3

If you connect several inverters in parallel, the technical data are multiplied according to the number of systems. The water flowrate for type 2T 6 A-7 5 69 4-925 with four inverter systems is e.g. 4×2000 l/h.

The water-cooled units BG SW2 and SW21 have the same cabinet width as the air-cooled units.

In the case of units with frame size S3, the cabinet width when compared to the air-cooled version increases as follows:

Cabinet increase for water cooling	
Units with one system	200 mm
Units with two or three systems	400 mm
Units with four systems	600 mm

Water cooling - Ambient conditions	
Frame size	BG SW2, BG SW21, BG SW3
Degree of protection	IP55 IP54 with operator panel in the door
Water quality	For industrial water, see section "Permissible substance values for the cooling water" (Page 180)
Permissible coolant temperature	+ 10 °C … + 25 / 30°C (depends on the power, see inverter documentation)
Permissible ambient temperature	In operation: + 1 °C … + 55 °C

Water cooling - Water pressure and amount of water			
Frame size	BG SW2	BG SW2/21	BG SW3
Water flow rate [l/h]	720	1200	2000
Min. operating pressure [bar]	1	1	2.5
Max. operating pressure [bar]	6	6	6
Pressure loss [approx. bar]	0.5	0.7	1.4
Test pressure [bar]	10	10	10

Water cooling - Connection hoses			
Frame size	BG SW2	BG SW2/21	BG SW3
Inlet DN "…^…"	13 ^ ½ "	13 ^ ½ "	19 ^ ¾ "
Return DN "…^…	13 ^ ½ "	13 ^ ½ "	19 ^ ¾ "
Venting DN "…^…"	13 ^ ½ "	13 ^ ½ "	13 ^ ½ "
Cabinet height [mm]	2000	2200	2200

C.10 Permissible substance values for the cooling water

Permissible substance values for the cooling water (process water and de-ionized water) for inverter cooling with open standard cooling without a cooling system.

Material: Stainless steel, material number: 1.4301; 1.4571

	Permissible values for stainless steel material
Water temperature	+ 10 ... + 30 (+ 35) °C
pH value	7 ... 8
Total hardness	6 ... 20 °dH
Carbonate hardness	3 ... 10 °dH
Solid residue from evaporation 105 °C	< 500 mg / l
Free carbon dioxide	< 1 mmol / l
Chlorides	< 150 mg / l
Sulfates	500 mg / l
Nitrates	< 10 mg / l
Nitrites	0 mg / l
Phosphates	< 0,5 mg / l
Ammonium NH4	< 0,5 mg / l
Ammonia	0 mg / l
Silicon (SiO2 crystalline)	< 10 mg / l
Free CO2 (p value)	< 15 mg / l
Iron	< 0,2 mg / l
Hydrogen sulfide	< 1 mg / l
Suspended solids < 50 µm	< 10 mg / l
Conductivity	< 3000 µS / cm
Oxygen	8 ... 12 mg / l

C.11 Threshold values for fan control system

The fan control system detects the three following states: OFF, SLOW and FAST.

- OFF: The fans are OFF if the unit is not switching and all relevant temperatures are below the thresholds for FAST.
- SLOW: The fans operate slowly if the unit is turned on (= is switching) and all relevant temperatures are below the thresholds for FAST.
- FAST: The fans operate fast if one of the relevant temperatures is higher than the threshold for FAST irrespective of whether or not the unit is turned on.

Table C-5 Threshold values for fan control system

Actual value in inverter	Fans OFF or SLOW	Fans FAST
T-CPU	≤ 50 °C	≥ 55 °C
T-heats. max./T-KK-N max	≤ 40 °C	≥ 50 °C
T-thr.-M max/T-thr.-N max	≤ 40°C	≥ 45 °C
T-Diff. max/T-DIFF_N max	Air: ≤ 5 °C, water: ≤ 7 °C	Air: ≥ 7 °C, water: ≥ 9 °C

C.12 Derating

C.12.1 Current derating

The devices and the associated system components are rated for an ambient temperature of 40 °C and installation altitudes of up to 1000 m above sea level.

The following tables specify the permissible output currents as a function of the installation altitude and ambient temperature.

Note also the information in section "Voltage derating" (Page 183).

Table C-6 Current derating for air-cooled inverters

Installation altitude above sea level in m	Current derating factor in % of rated current							
	20 °C	25 °C	30 °C	35 °C	40 °C	45 °C	50 °C	55 °C[1]
0 … 1000	100 %	100 %	100 %	100 %	100 %	87.5 %	75.0 %	62.5 %
1001 … 1500	100 %	100 %	100 %	100 %	94.4 %	82.6 %	70.8 %	59.0 %
1501 … 2000	100 %	100 %	99.4 %	94.3 %	88.9 %	77.8 %	66.7 %	55.6 %
2001 … 2500[2]	100 %	97.7 %	93.2 %	88.4 %	83.3 %	72.9 %	62.5 %	52.1 %
2501 … 3000[2]	95.3 %	91.2 %	87.0 %	82.5 %	77.8 %	68.1 %	58.3 %	48.6 %
3001 … 3500[2][3]	89.8 %	86.0 %	82.0 %	77.8 %	73.3 %	64.2 %	55.0 %	45.8 %
3501 … 4000[2][3]	84.4 %	80.8 %	77.0 %	73.1 %	68.9 %	60.3 %	51.7 %	43.1 %
4001 … 4500[2][3]	78.9 %	75.6 %	72.1 %	68.4 %	64.4 %	56.4 %	48.3 %	40.3 %
4501 … 5000[2][3]	73.5 %	70.4 %	67.1 %	63.6 %	60.0 %	52.5 %	45.0 %	37.5 %

[1] Permissible only for compact units that are not installed in a cabinet
[2] Voltage derating must also be implemented for compact units at an installation altitude of > 2000 m.
[3] Voltage derating must also be implemented for cabinet units at an installation altitude of > 3000 m.

The following current derating values apply to water-cooled inverters. Refer to the technical data sheet or the CD supplied with the product for the maximum water inlet temperature.

Table C-7 Current derating for water-cooled inverters with a maximum water inlet temperature of 28 °C

Installation altitude above sea level in m	Current derating factor in % of rated current				
	18 °C	23 °C	28 °C	33 °C	38 °C
0 … 1000	100 %	100 %	100 %	84.0 %	64.2 %
1001 … 1500	100 %	100 %	94.4 %	79.3 %	60.6 %
1501 … 2000	100 %	100 %	88.9 %	74.7 %	57.0 %
2001 … 2500	100 %	94.8 %	83.3 %	70.0 %	53.5 %
2501 … 3000	98.0 %	88.5 %	77.8 %	65.3 %	49.9 %
3001 … 3500[1)]	92.4 %	83.4 %	73.3 %	61.6 %	47.1 %
3501 … 4000[1)]	86.8 %	78.4 %	68.9 %	57.9 %	44.2 %
4001 … 4500[1)]	81.2 %	73.3 %	64.4 %	54.1 %	41.4 %
4501 … 5000[1)]	75.6 %	68.3 %	60.0 %	50.4 %	38.5 %

[1)] Voltage derating must also be implemented for cabinet units at an installation altitude of > 3000 m.

Table C-8 Current derating for water-cooled inverters with a maximum water inlet temperature of 30 °C

Installation altitude above sea level in m	Current derating factor in % of rated current				
	20 °C	25 °C	30 °C	35 °C	40 °C
0 … 1000	100 %	100 %	100 %	81.6 %	57.7 %
1001 … 1500	100 %	100 %	94.4 %	77.1 %	54.5 %
1501 … 2000	100 %	100 %	88.9 %	72.6 %	51.3 %
2001 … 2500	100 %	96.2 %	83.3 %	68.0 %	48.1 %
2501 … 3000	100 %	89.8 %	77.8 %	63.5 %	44.9 %
3001 … 3500[1)]	94.7 %	84.7 %	73.3 %	59.9 %	42.3 %
3501 … 4000[1)]	88.9 %	79.5 %	68.9 %	56.2 %	39.8 %
4001 … 4500[1)]	83.2 %	74.4 %	64.4 %	52.6 %	37.2 %
4501 … 5000[1)]	77.5 %	69.3 %	60.0 %	49.0 %	34.6 %

[1)] Voltage derating must also be implemented for cabinet units at an installation altitude of > 3000 m.

Table C-9 Current derating for water-cooled inverters with a maximum water inlet temperature of 35 °C

Installation altitude above sea level in m	Current derating factor in % of rated current			
	25 °C	30 °C	35 °C	40 °C
0 … 1000	100 %	100 %	100 %	70.7 %
1001 … 1500	100 %	100 %	94.4 %	66.8 %
1501 … 2000	100 %	100 %	88.9 %	62.9 %
2001 … 2500	100 %	100 %	83.3 %	58.9 %
2501 … 3000	100 %	95.3 %	77.8 %	55.0 %
3001 … 3500[1)]	100 %	89.8 %	73.3 %	51.9 %
3501 … 4000[1)]	97.4 %	84.4 %	68.9 %	48.7 %

Installation altitude above sea level in m	Current derating factor in % of rated current			
	25 °C	30 °C	35 °C	40 °C
4001 … 4500[1)]	91.1 %	78.9 %	64.4 %	45.6 %
4501 … 5000[1)]	84.9 %	73.5 %	60.0 %	42.4 %

[1)] Voltage derating must also be implemented for cabinet units at an installation altitude of > 3000 m.

C.12.2 Voltage derating

The compact units are dimensioned according to minimum air clearances up to 2000 m above sea level and the cabinet units up to 3000 m. Voltage derating is not required unless the installation altitude is higher than 2000 m or 3000 m above sea level.

Since the air clearances in the inverter cannot be changed, this factor must be taken into account in the voltage derating calculation.

Table C-10 Voltage derating for compact units

Installation altitude above sea level in m	Voltage derating factor in % of rated voltage
0 … 2000	100 %
2001 … 2500	93.4 %
2501 … 3000	87.7 %
3001 … 3500	81.9 %
3501 … 4000	77.5 %
4001 … 4500	71.9 %
4501 … 5000	67.6 %

Table C-11 Voltage derating for cabinet units

Installation altitude above sea level in m	Voltage derating factor in % of rated voltage
0 … 3000	100 %
3001 … 3500	93.9 %
3501 … 4000	88.5 %
4001 … 4500	82.4 %
4501 … 5000	77.0 %

List of abbreviations

D

ATEX	"Atmosphère explosible": Synonym for the two EC explosion protection Directives: ATEX Product Directive 94/9/EC and ATEX Safety Directive 1999/92/EC
BeO	beryllium oxide: toxin. Relevant for the disposal
BGR	Health and safety at work regulations
BGV	Regulations of the German Trade Association
CD	"Compact Disc": Optical storage medium for digital storage of music and data.
CB08	Control electronics board
DIL	"Dual In-Line Package": Oblong case form (Package) for electronic components
DVC	"Decisive Voltage Class": Classification of the voltage range used to determine protective measures against electric shock hazards
ESD	Electrostatically Sensitive Devices
EMC	Electromagnetic compatibility
EN	"Europäische Norm": European standards are rules which have been ratified by one of the three European standardization committees.
Ex	Explosion-proof area
GSD	"General Station Description", original "device master data": A data format for PROFIBUS and PROFInet devices
IEC	"International Electrotechnical Commission": Standards committee for electrical engineering
IGBT	"Insulated Gate Bipolar Transistor": Type of power semiconductor
IMS	"Inverter Management Software": You can also parameterize the inverter with this software using a PC, save parameter sets, etc. You can download the software at no cost from the manufacturer's website.
LED	"Light Emitting Diode", Light Emitting Diode
LHF	"Line Harmonics Filter": Reduces the low-frequency line harmonics of 6-pulse rectifier connections
LSB	"Least Significant Bit": Least significant bit of a binary number
MLFB	"Maschinenlesbare Fabrikate Bezeichnung": Product Order No.
MSB	"Most Significant Bit": Most significant bit of a binary number
MSC	Machine-side converter
NAMUR	originally "Normenarbeitsgemeinschaft für Meß- und Regeltechnik in der chemischen Industrie": International user association for automation in the process industry
NC	"Normally Closed", NC contact
NO	"Normally Opened", NO contact
LSC	Line-side converter
NRTL	"Nationally Recognized Testing Laboratory": United States designation given to testing facilities that provide product safety testing and certification services to manufacturers
NYY, NYCWY	Cable types
PCB	polychlorinated biphenyls: toxins. Relevant for the disposal.
PELV	"Protective Extra Low Voltage", protective extra-low voltage (PELV). previously function extra-low voltage with safe isolation
PMM	permanent magnet machine

PCS	Process control system
PPO	Parameter process data object: integral part of a Profibus profile
PTC	"Positive Temperature Coefficient", Positive Temperature Coefficient: PTC thermistor
RS 232, RS 485, RS 422	standards for serial interfaces
RTU	"Remote Terminal Unit": Remote terminal unit
SELV	"Safety Extra Low Voltage": Safety extra low voltage
PLC	Programmable Logic Controller
Sub-D	Actually "D-Sub": common type of a connector system for data connections
TCP	"Transmission Control Protocol": a network protocol
TÜV	"Technischer Überwachungsverein": Body which carries out technical safety checks as prescribed by national laws or regulations
UL	"Underwriters Laboratories": Certification organization for product safety in the USA
USB	"Universal Serial Bus": serial bus system
UPS	Uninterruptible power supply
VDE	Association for Electrical, Electronic & Information Technologies
De-ionized water	Fully de-ionized water
ZLU	Supplementary supply agreements for inverter drives in power plants

Index

A

Analog inputs, 112
Analog outputs, 86
Antifreeze
    First aid measures, 20
Application
    Factory settings, 143

B

Brake transistor, 142
Braking resistor, 142

C

Commissioning, 71
Configuration, 116
Connecting control cables, 52
Connection
    external control voltage, 61
    Line supply, 53
    Motor, 57
Contact person, 161
Contactor functions, 108
Contacts, 162
Control cable terminals, 97, 176
    NAMUR, 126
    Standard, 120
Control voltage, 61
    Protecting, 26, 61
Coolant
    Safety precautions, 20
Cooling water, 180
    Additives, 157

D

DC link terminals, 145
Default setting, 143
Derating, 181
    Current derating, 181
    Derating according to installation altitude, 181
    Temperature derating, 181
    Voltage derating, 183
Digital inputs, 112
Digital outputs, 85
Display, 79
    External, 147
    installing, 48
du/dt filter, 148

E

Electrical installation, 51
electronic shutdown, 137
Erroneous pulses, 25, 26
ESD guidelines, 23
ESD protective measures, 24
external control voltage, 61
external display, 48, 147

F

Fan, 180
Fiber-optic cables, 26
Filter
    du/dt, 148
    Mains power protection, 148
    RFI suppression, 147
    Sinusoidal, 148
First aid
    Antifreeze , 20
Five safety rules, 13
Flashlight, 26
Fuse, 51

I

Inputs
    Analog, 112
    Digital, 112
Installation, 45
    Cabinet unit, 47
    Compact unit, 46
    Electrical, 51
    external display, 48
    Mechanical, 45

M

Main switches, 144
Mains connection, 53

Mains power protection choke, 148
Maintenance, 131
MLFB, 27
Mobile telephones, 25
Modbus board, 150, 152
Modbus circuit board, 85
More information, 161
Motor connection, 57

O

On-site service, 161
Operation, 79
Operation settings
    NAMUR, 90
    Standard, 87
Order number, 27
Outputs
    Analog, 86
    Digital, 85

P

Parameter
    Overview, 143
Profibus circuit board, 85, 148
Protecting the inverter, 51
Protective cover, 46, 144
PTC inputs, 141
PTC thermistor inputs, 141

R

Radio telephones, 25
RFI suppression filter, 147

S

Safe halt, 137, 139
Safety precautions
    Coolant, 20
Safety rules, 13
Service Center, 161
    Ruhstorf, 162
Setpoint source, 116
Setting supply voltage, 56
shutdown, electronic, 137
Siemens Service Center, 161
Sine-wave filter, 148
Software
    Update, 27
Spare parts, 161, 162
Storage, 36
Switch disconnectors, 144

T

Technical data
    Control cable terminals, 176
    Inverter, 169
Technical support, 162
Threshold values
    Fan, 180
Transport, 33
Type code, 27
Type designation, 27

W

Water cooling, 154, 155
    Maintenance, 133
    Technical data, 178