Function Manual · 07/2008

FUNCTION MANUAL

G120
G120D
ET 200S FC
ET 200pro FC

Firmware version V3.2

sinamics
simatic

SIEMENS

SIEMENS

SINAMICS / SIMATIC

G120, G120D, ET 200S FC, ET 200pro FC

Function Manual

Introduction 1

Safety Notes 2

Product Line 3

Parameter Assignment/Addressing 4

BICO Technology 5

Common Inverter Functions 6

Functions only available with G120 inverters 7

Fail-Safe Functions 8

Power module dependent functions 9

List of Abbreviations A

Edition 07/2008, Firmware version V3.2

07/2008 - FW 3.2
A5E01137279B AB

Safety Guidelines

This manual contains notices you have to observe in order to ensure your personal safety, as well as to prevent damage to property. The notices referring to your personal safety are highlighted in the manual by a safety alert symbol, notices referring only to property damage have no safety alert symbol. These notices shown below are graded according to the degree of danger.

⚠DANGER
indicates that death or severe personal injury **will** result if proper precautions are not taken.

⚠WARNING
indicates that death or severe personal injury **may** result if proper precautions are not taken.

⚠CAUTION
with a safety alert symbol, indicates that minor personal injury can result if proper precautions are not taken.

CAUTION
without a safety alert symbol, indicates that property damage can result if proper precautions are not taken.

NOTICE
indicates that an unintended result or situation can occur if the corresponding information is not taken into account.

If more than one degree of danger is present, the warning notice representing the highest degree of danger will be used. A notice warning of injury to persons with a safety alert symbol may also include a warning relating to property damage.

Qualified Personnel

The device/system may only be set up and used in conjunction with this documentation. Commissioning and operation of a device/system may only be performed by **qualified personnel**. Within the context of the safety notes in this documentation qualified persons are defined as persons who are authorized to commission, ground and label devices, systems and circuits in accordance with established safety practices and standards.

Prescribed Usage

Note the following:

⚠WARNING
This device may only be used for the applications described in the catalog or the technical description and only in connection with devices or components from other manufacturers which have been approved or recommended by Siemens. Correct, reliable operation of the product requires proper transport, storage, positioning and assembly as well as careful operation and maintenance.

Trademarks

All names identified by ® are registered trademarks of the Siemens AG. The remaining trademarks in this publication may be trademarks whose use by third parties for their own purposes could violate the rights of the owner.

Disclaimer of Liability

We have reviewed the contents of this publication to ensure consistency with the hardware and software described. Since variance cannot be precluded entirely, we cannot guarantee full consistency. However, the information in this publication is reviewed regularly and any necessary corrections are included in subsequent editions.

Siemens AG
Industry Sector
Postfach 48 48
90327 NÜRNBERG
GERMANY

Ordernumber: A5E01137279B AA
℗ 06/2008

Copyright © Siemens AG 2007/, 2008.
Technical data subject to change

Table of contents

1 Introduction 9
1.1 Documents for the Inverter 9
1.2 Description of Document Classes 10
2 Safety Notes 11
3 Product Line 15
3.1 Global System Overview 15
3.2 Function Overview 16
4 Parameter Assignment/Addressing 21
4.1 Overview of Parameters 21
4.2 Write parameters 22
4.3 Monitoring parameters 22
4.4 Parameter Attributes 23
5 BICO Technology 29
5.1 BICO Technology Overview 29
5.2 Using BICO technology 29
6 Common Inverter Functions 33
6.1 Motor Data Identification 33
6.2 Motorized Potentiometer (MOP) 36
6.3 Positioning Ramp Down 40
6.4 JOG 43
6.5 Monitoring Functions 46
6.5.1 General monitoring functions and messages 46
6.5.2 Load torque monitoring 49
6.5.3 Power Module Protection 52
6.5.3.1 General Overload Monitoring 52
6.5.3.2 Power Module Thermal Monitoring 53
6.5.4 Thermal Motor Protection and Overload Responses 55
6.5.4.1 Thermal motor protection without sensor 57
6.5.4.2 Thermal motor protection with a PTC thermistor 58
6.5.4.3 Thermal motor protection with a KTY84 sensor 59
6.5.4.4 Thermal motor protection with a ThermoClick sensor 59
6.6 Restart Functions 60
6.6.1 Automatic restart 60
6.6.2 Flying restart 62
6.7 Data Sets 66

6.8 Electro-Mechanical Brakes ... 73
6.8.1 Motor Holding Brake ... 74
6.8.2 Instantaneous brake ... 79

6.9 Setpoint Channel ... 81
6.9.1 Summation and modification of frequency setpoint ... 81
6.9.2 Ramp-function generator ... 84
6.9.3 OFF/Braking Functions ... 88
6.9.4 Manual and Automatic Operation ... 92
6.9.5 FFBs and Fast FFBs ... 94
6.9.6 Wobble Generator ... 103

6.10 Control Functions ... 105
6.10.1 Open-loop and closed-loop control overview ... 105
6.10.2 V/f Control ... 106
6.10.2.1 Voltage boost ... 110
6.10.2.2 Slip compensation ... 113
6.10.2.3 V/f resonance damping ... 114
6.10.2.4 V/f control with FCC ... 115
6.10.2.5 Current limiting (Imax controller) ... 117
6.10.3 Vector Control ... 119
6.10.3.1 Vector Control without Speed Encoder ... 121
6.10.3.2 Vector control with speed encoder ... 128
6.10.3.3 Speed controller ... 133
6.10.3.4 Closed-loop torque control ... 137
6.10.3.5 Closed-loop torque control (SLVC) ... 139
6.10.3.6 Switch-over from Frequency to Torque Control ... 140
6.10.3.7 Limiting the torque setpoint ... 142

7 Functions only available with G120 inverters ... 145

7.1 2-/3-Wire Control ... 145
7.1.1 Siemens standard control (P0727 = 0) ... 147
7.1.2 2-wire control (P0727 = 1) ... 149
7.1.3 3-wire control (P0727 = 2) ... 150
7.1.4 3-wire control (P0727 = 3) ... 152

7.2 Setpoint via Fixed Frequencies ... 153

7.3 PID Controller ... 157
7.3.1 PID dancer roll control ... 161
7.3.2 PID Motorized Potentiometer ... 165
7.3.3 Setpoint via PID Fixed Frequencies ... 166

7.4 Digital inputs (DI) ... 169

7.5 Digital outputs (DO) ... 172

7.6 Analog inputs (A/D converter) ... 174

7.7 Analog outputs (D/A converter) ... 176

8 Fail-Safe Functions ... 179

8.1 Overview of the fail-safe functions ... 179
8.1.1 Permissible applications for the fail-safe functions ... 181
8.1.2 Application examples for fail-safe functions ... 183
8.1.3 Dependency of Failsafe and OFF commands ... 185

8.2 Monitoring the fail-safe functions ... 186

8.3 Limiting values for SS1 and SLS ... 188

8.4 Safe Torque Off 193
8.5 Safe Stop 1 196
8.6 Safely Limited Speed 200
8.6.1 Safely Limited Speed, Mode 0 202
8.6.2 Safely Limited Speed, Mode 1 210
8.6.3 Safely Limited Speed, Mode 2 218
8.6.4 Safely Limited Speed, Mode 3 223
8.7 Safe Brake Control 231
9 Power module dependent functions 233
9.1 Electronic Brakes 233
9.1.1 DC braking 234
9.1.2 Compound braking 237
9.2 Dynamic Brakes 239
9.2.1 Dynamic braking 239
9.2.2 Regenerative braking 243
9.3 DC Link Voltage Controller 245
9.3.1 Closed-loop Vdc control 245
9.3.2 Vdc_max controller 246
9.3.3 Kinetic buffering 247
A List of Abbreviations 249
A.1 Abbreviations 249
Index 255

Introduction 1

1.1 Documents for the Inverter

Available technical documentation

Comprehensive information and support tools are available from the Service and Support internet site

- http://support.automation.siemens.com

You find there the following types of documentation:

- Getting Started
- Operating Instructions
- Hardware Installation Manual
- Function Manual
- Parameter Manual
- Product Information

Further internet addresses

You can download the respective documents for your inverter under the following links:

- SINAMICS G110
  http://support.automation.siemens.com/WW/view/en/13740464/13740464
- SINAMICS G120
  http://support.automation.siemens.com/WW/view/en/22339653/133300
- SINAMICS G120D
  http://www.siemens.com/sinamics-g120d
- SIMATIC ET 200S FC
  http://support.automation.siemens.com/WW/view/en/18698679/133300
- SIMATIC ET 200pro FC
  http://support.automation.siemens.com/WW/view/en/24622073/133300

Application examples

You find various application examples to the inverters under the following link:

- http://support.automation.siemens.com/WW/view/en/20208582/136000

1.2 Description of Document Classes

Description of the documents

The following section describes the available document types for your inverter:

Brochure

The Brochure is advertising literature designed to introduce the product to the marketplace. It contains a basic outline of the product with a brief overview of the technical capabilities of the product.

Catalog

The Catalog presents information that allows the customer to select an appropriate inverter including all available options. It contains detailed technical specifications, ordering and pricing information to allow the customer to order the appropriate items for their application or plant.

Getting Started

The Getting Started presents warnings, dimension drawings and a brief set up information for the customer.

Operating Instructions

The Operating Instructions gives information about the features of the inverter. It gives detailed information about commissioning, control modes, system parameters, troubleshooting, technical specifications and the available options of the product.

Hardware Installation Manual

The Hardware Installation Manual gives information for the Power Modules regarding the features of the product. It gives detailed information on installation, technical specifications, dimension drawings and the available options from the product.

Function Manual

The Function Manual is a list of detailed information about the inverter's functions. It contains descriptions of the internal components, modules and gates as well as examples for usage. Moreover associated parameters and miscellaneous logic operations of the controls are given.

Parameter Manual

The Parameter Manual contains a detailed description of all the parameters that can be modified to adapt the inverter to specific applications. The Parameter Manual also contains a series of function diagrams to diagrammatically portray the nature and interoperability of the system parameters.

Safety Notes 2

Safety Instructions

The following Warnings, Cautions and Notes are provided for your safety and as a means of preventing damage to the product or components in the connected machines. This section lists Warnings, Cautions and Notes, which apply generally when handling the inverter, classified as General, Transport and Storage, Commissioning, Operation, Repair and Dismantling and Disposal.

Specific Warnings, Cautions and Notes that apply to particular activities are listed at the beginning of the relevant sections in this manual and are repeated or supplemented at critical points throughout these sections.

Please read the information carefully, since it is provided for your personal safety and will also help prolong the service life of your inverter and the equipment to which it is connected.

General

⚠ WARNING

This equipment contains dangerous voltages and controls potentially dangerous rotating mechanical parts. Non-compliance with the warnings or failure to follow the instructions contained in this manual can result in loss of life, severe personal injury or serious damage to property.

Protection in case of direct contact by means of SELV / PELV is only permissible in areas with equipotential bonding and in dry indoor rooms. If these conditions are not fulfilled, other protective measures against electric shock must be applied e.g. protective insulation.

Only suitably qualified personnel should work on this equipment, and only after becoming familiar with all safety notices, installation, operation and maintenance procedures contained in this manual. The successful and safe operation of this equipment is dependent upon its proper handling, installation, operation and maintenance.

As the earth leakage for this product can be greater than 3.5 mA a.c., a fixed earth connection is required and the minimum size of the protective earth conductor shall comply with the local safety regulations for high leakage current equipment.

If an RCD (also referred to as an ELCB or a RCCB) is fitted, the Power Module will operate without nuisance tripping provided that:

- A type B RCD is used.
- The trip limit of the RCD is 300 mA.
- The neutral of the supply is grounded.
- Only one Power Module is supplied from each RCD.
- The output cables are less than 15 m screened or 30 m unscreened.

The power supply, DC and motor terminals, the brake and thermistor cables can carry dangerous voltages even if the inverter is inoperative. Wait at least five minutes to allow the unit to discharge after switching off the line supply before carrying out any installation work.

It is strictly prohibited for any mains disconnection to be performed on the motor-side of the system; any disconnection of the mains must be performed on the mains-side of the Inverter.

When connecting the line supply to the Inverter, make sure that the terminal case of the motor is closed.

This equipment is capable of providing internal motor overload protection according to UL508C. Refer to P0610 and P0335, i^2t is ON by default.

When changing from the ON to OFF-state of an operation if an LED or other similar display is not lit or active; this does not indicate that the unit is switched-off or powered-down.

The inverter must always be grounded.

Isolate the line supply before making or changing connections to the unit.

Ensure that the inverter is configured for the correct supply voltage. The inverter must not be connected to a higher voltage supply.

Static discharges on surfaces or interfaces that are not generally accessible (e.g. terminal or connector pins) can cause malfunctions or defects. Therefore, when working with inverters or inverter components, ESD protective measures should be observed.

Take particular notice of the general and regional installation and safety regulations regarding work on dangerous voltage installations (e.g. EN 50178) as well as the relevant regulations regarding the correct use of tools and personal protective equipment (PPE).

⚠ CAUTION

Children and the general public must be prevented from accessing or approaching the equipment!

This equipment may only be used for the purpose specified by the manufacturer. Unauthorized modifications and the use of spare parts and accessories that are not sold or recommended by the manufacturer of the equipment can cause fires, electric shocks and injuries.

NOTICE

Keep this manual within easy reach of the equipment and make it available to all users.

Whenever measuring or testing has to be performed on live equipment, the regulations of Safety Code BGV A2 must be observed, in particular § 8 "Permissible Deviations when Working on Live Parts". Suitable electronic tools should be used.

Before installing and commissioning, please read these safety instructions and warnings carefully and all the warning labels attached to the equipment. Make sure that the warning labels are kept in a legible condition and replace missing or damaged labels.

Product Line 3

3.1 Global System Overview

Inverter families

The function manual contains the function description of the following inverter families.

- SINAMICS G120
- SINAMICS G120D
- SIMATIC ET 200S FC
- SIMATIC ET 200pro FC

All the inverters - except the ET 200pro FC- are modular build. That means, within a series there is a range of Control Units that can be combined with different variants of Power Modules.

Power Modules and Control Units of different ranges must not be interchanged.

3.2 Function Overview

This section gives an overview about the available functions, depending on the type of frequency inverters.

Common inverter functions

The Inverter provide the following functions:

- Motor Data Identification
- Motorized potentiometer (not available available for ET 200S FC and ET 200pro FC)
- JOG function
- Monitoring functions
  - General monitoring functions and messages
  - Load torque monitoring
  - Power Module Protection

    General Overload Monitoring

    Power Module Thermal Monitoring
  - Thermal Motor Protection and Overload Responses

    Thermal motor model

    Motor Temperature Identification after Restart

    Temperature sensors
- Restart functions
  - Automatic restart
  - Flying restart
- Data Sets
- Electro-mechanical brake functions
  - Motor Holding Brake
  - Instantaneous Brake
- BICO Technology
- Setpoint channel
  - Summation and modification of frequency setpoint
  - Ramp-function generator
  - OFF/Braking Functions
  - Manual and Automatic Operation
  - FFBs and Fast FFBs
  - Wobble Generator
- Positioning ramp down

- Control functions
  - V/f Control
    Voltage boost
    Slip compensation
    V/f resonance damping
    V/f control with FCC
    Current limiting (Imax controller)
  - Vector Control
    Vector control without speed encoder
    Vector control with speed encoder (not available for ET 200pro FC)
    Speed controller
    Speed controller (SLVC)
    Closed-loop torque control
    Closed-loop torque control (SLVC)
    Switch-over from Frequency to Torque Control
    Limiting the torque setpoint

Functions only available with G120 inverters

- 2-/3-wire control
- Fixed frequencies
- PID Controller
  - PID dancer roll control
  - PID Motorized Potentiometer
  - Setpoint via PID Fixed Frequencies
- Digital Input Functions
- Digital Output Functions
- Analog Input Functions
- Analog Output Functions

Fail-safe functions

Table 3-1 Fail-safe functions

	SINAMICS G120				SINAMICS G120D		SIMATIC ET 200S FC		ET 200pro FC	ET 200pro FC-F [2]
	CU240S	CU240S DP	CU240S DP-F	CU240S PN	CU240D DP	CU240D DP-F	ICU24	ICU24F [1]		
STO	---	---	X	---	---	X	---	X	---	X
SS1	---	---	X	---	---	X	---	X	---	X
SLS	---	---	X	---	---	X	---	X	---	X
SBC	---	---	X	---	---	---	---	---	---	---

[1] only in combination with a failsafe ET 200 Power module (PM-DF)
[2] only in combination with an FRSM

Power Module functions

Table 3-2 Power Module relating functions

	SINAMICS G120			SINAMICS G120D	ET 200S FC	ET 200pro FC
	PM240	PM250	PM260	PM250D	IPM25	
Closed-loop Vdc control	X	---	---	---	---	---
Electronic brakes	X	---	---	---	---	---
Dynamic braking via chopper resistor	X	---	---	---	---	---
Dynamic braking via regenerative braking	---	X	X	X	X	X
VDC controller	X	---	---	---	---	---

Interfaces

The following table defines the realizable function sources for each device. E. g. on the ET 200pro FC, you cannot activate the MOP function via the BOP.

Table 3-3 Control Unit communication interfaces

	SINAMICS G120				SINAMICS G120D		ET 200S FC		ET 200pro FC	ET 200pro FC-F
	CU240S	CU240S DP	CU240S DP-F	CU240S PN	CU240D DP	CU240D DP-F	ICU24	ICU24F		
Option port (BOP/STARTER) via r0019	X	X	X	X	---	---	---	---	---	---
USS on RS232 via r2032	--	X	X	X	X	X	---	---	---	---
USS on RS485 via r2036	X	---	---	---	---	---	---	---	---	---
PROFIBUS DB via r2090	---	X	X	---	X	X	via IM151-1	---	Via IM154-1 or IM154-2	Via IM154-1 or IM154-2
PROFInet via r8890	---	---	---	X	---	---	Via IM151-3	---	Via IM154-4	Via IM154-4

Table 3-4 Control Unit interfaces

	SINAMICS G120				SINAMICS G120D		ET 200S FC		ET 200pro FC	ET 200pro FC-F
	CU240S	CU240S DP	CU240S DP-F	CU240S PN	CU240D DP	CU240D DP-F	ICU24	ICU24F		
MMC	X	X	X	X	X	X	X	X	X	X
Digital inputs	9	9	6	6	6	6	---	---	---	---
Safe Digital inputs	---	----	2	---	---	---	---	---	---	---
Digital outputs	3	3	3	3	2	2	---	---	---	---
Analog inputs	2	2	2	2	---	---	---	---	---	---
Analog outputs	2	2	2	2	---	---	---	---	---	---
Encoder	X	X	X	X	X	X	X	X	---	---
PTC/KTY	X	X	X	X	---	---	X	X	---	---

Table 3-5 Power Module interfaces

	SINAMICS G120			SINAMICS G120D	ET 200S FC	ET 200pro FC	ET 200pro FC F
	PM240	PM250	PM260	PM250D	IPM25		
PTC/KTY in motor cable	---	---	---	X	---	X	X
EM Brake 24 V	X	X	X	---	X	---	---
EM Brake 180 V	---	---	---	X	• DC 24 V via XB1 • DC 500 V via XB2	X	X
DC+ / DC- terminals	X	---	---	---	---	---	---
Brake chopper	X	---	---	---	---	---	---

Parameter Assignment/Addressing

4

4.1 Overview of Parameters

Overview of parameters

The inverter is adapted to a particular application using the corresponding parameters. This means that each parameter is identified by a parameter number and specific attributes (e.g. monitoring parameter, write parameter, BICO attribute, group attribute etc.). Within any one particular inverter system, the parameter number is unique.

Parameters can be accessed using the following operator units:

- BOP
- PC-based commissioning (start-up) tool STARTER.

There are two main types of parameters; those that can be altered and those that are read-only.

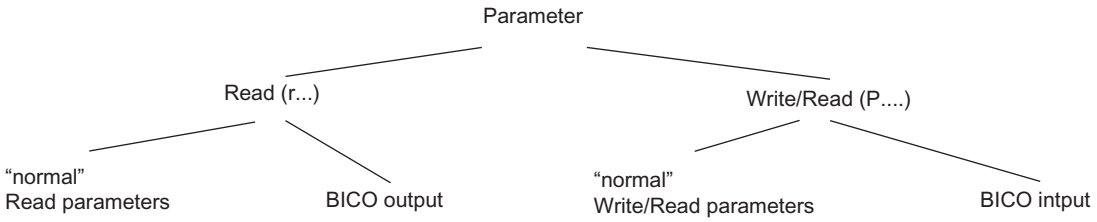

Figure 4-1 Parameter types

4.2 Write parameters

Description

Parameters which can be written into and displayed are indicated by the prefix "P".

These parameters directly influence the behavior of a function. The value of this parameter is saved in non-volatile memory (EEPROM) as long as the appropriate option was selected (non-volatile data save). Otherwise, these values are saved in the volatile memory (RAM) of the processor, which are lost after power failure or power-off/power-on operations.

Examples of the standard notation used throughout our manuals is given below.

Notation examples:

P0970	parameter 970
P0748.1	parameter 748, bit 01
P0819[1]	parameter 819 index 1
P0013[0 ... 19]	parameter 13 with 20 indices (indices 0 to 19)

4.3 Monitoring parameters

Description

Parameters which can only be monitored are indicated by the prefix "r".

These parameters are used to display internal quantities, for example states and actual values.

Notation examples:

r0002	monitoring parameter 2
r0052.3	monitoring parameter 52, bit 03
r0947[2]	monitoring parameter 947 index 2
r0964[0 ... 4]	monitoring parameter 964 with 5 indices (indices 0 to 4)

4.4 Parameter Attributes

Overview

In the Parameter Manual, the header line of each parameter shows all the attributes and groups for that specific parameter. The figure below shows the details for parameter P0700 and r1515.

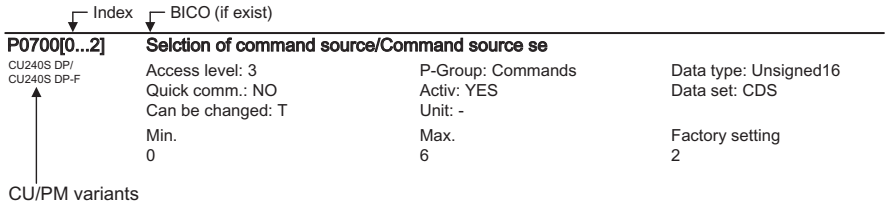

Figure 4-2 Description of attributes for parameter P0700

Figure 4-3 Description of attributes for parameter r1515

Index

Using the index, a parameter (e.g. p0013[20]) is defined with several consecutive elements (in this case, 20). Each individual index is defined using a numerical value.

When transferred to a parameter this means that an indexed parameter can have several values. The values are addressed using the parameter number including the index value (e.g. p0013[0], p0013[1], p0013[2], p0013[3], p0013[4], ...).

Indexed parameters are used, for example:

- Drive Data Sets (DDS)
- Command Data Sets (CDS)
- Sub functions.

BICO

The following types of connectable parameters are available. A description of BICO technology is given in the section "BICO Technology".

Table 4-1 Parameter attributes - BICO

BICO	Description
BI	Binector Input
BO	Binector Output
CI	Connector Input
CO	Connector Output
CO/BO	Connector Output/Binector Output

Access level

The access level is controlled using parameter P0003. In this case, only those parameters are visible at the BOP, where the access level is less than or equal to the value assigned in parameter P0003. On the other hand, for STARTER, only access levels 0 and 3 are relevant. For example, parameters with access level 3 cannot be changed, if the appropriate access level has not been set.

The following access levels are implemented in the inverters:

Table 4-2 Parameter attributes - access level

Access level	Description
0	User-defined Parameter Manual (refer to P0013)
1	Standard access to the most frequently used parameters
2	Extended access, e.g. to inverter I/O functions
3	Expert access only for experienced users
4	Service access only for authorized service personnel – with password protection.

Note

In STARTER, all user parameters (access stage 3) are always displayed using the expert list – independent of the setting p0003 = 0, 1, 2 or 3.

When changing parameters using STARTER, or via a higher-level control system, parameter value changes always become immediately effective.

Can be changed

"P" parameters can only be changed depending on the inverter state. The parameter value is not accepted if the instantaneous state is not listed in the parameter attribute "Can be changed". For instance, the quick commissioning parameter P0010 with the attribute "CT" can only be changed in quick commissioning "C" or ready "T" but not in operation "U".

Table 4-3 Parameter attributes - Can be changed

State	Description
C	Quick commissioning
U	Operation (Drive running)
T	Drive ready to run

Data types

The data type of a parameter defines the maximum possible value range. Five data types are used for the inverter. They either represent an unsigned integer value (U16, U32) or a floating-point value (float). The value range is frequently restricted by a minimum and maximum value (min, max) or using inverter/motor quantities.

Table 4-4 Parameter attributes - Data types

Data type	Description
U16	Unsigned, integer value with a size of 16 bits
U32	Unsigned, integer value with a size of 32 bits
I16	Signed integer 16-bit value
I32	Signed integer 32-bit value
Float	A simple precise floating point value according to the IEEE standard format max. value range: -3.39e+38 –+3.39e+38

Unit

The values of parameters support the following units:

Table 4-5 Parameter attributes - Unit

Unit	Description	Unit	Description
-	No dimension	m/s	Meters per second
%	Percentage	Nm	Newton meter
A	Ampere	W	Watt
V	Volt	kW	Kilowatt
Ohm	Ohm	Hp	Horse power
us	Microseconds	kWh	Kilowatt hours
ms	Milliseconds	°C	Degrees Celsius
s	Seconds	m	Meter
Hz	Hertz	kg	Kilograms
kHz	Kilohertz	°	Degrees (angular degrees)
1/min	Revolutions per minute [RPM]		

Grouping

The parameters are sub-divided into groups according to their functionality. This increases the transparency and allows a quicker and more efficient search for specific parameters. Furthermore, parameter P0004 can be used to control the specific group of parameters that are displayed on the BOP.

Table 4-6 Parameter attributes - Grouping

Grouping	Description		Main parameter area:
ALWAYS	0	all parameters	
INVERTER	2	inverter parameters	0200 … 0299
MOTOR	3	motor parameters	0300 … 0399 and 0600 … 0699
ENCODER	4	speed encoder	0400 … 0499
TECH_APL	5	technical applications/units	0500 … 0599
COMMANDS	7	control commands, digital I/O	0700 … 0749 and 0800 … 0899
TERMINAL	8	Analog inputs/outputs	0750 … 0799
SETPOINT	10	Setpoint channel and ramp-function gen.	1000 … 1199
Safety integrated	11	Fail-safe functions	9000 … 9999
FUNC	12	Inverter functions	1200 … 1299
CONTROL	13	Motor open-loop/closed-loop control	1300 … 1799
COMM	20	Communications	2000 … 2099
ALARMS	21	Faults, warnings, monitoring functions	0947 … 2199
TECH	22	Technology controller (PID controller)	2200 … 2399

Active

This attribute is only of importance in conjunction with an BOP. The "Yes" attribute indicates that this value is immediately accepted when it is changed. Especially parameters which are used for optimization functions have this property (e.g. constant voltage boost P1310 or filter time constants). On the other hand, for parameters with the attribute "First confirm", the value is only accepted after first pressing the key P. These include, for example, parameters where the parameter value can have different settings/meanings (e.g. selecting the frequency setpoint source P1000).

Table 4-7 Parameter attributes - Active

Active	Description
Yes	The value becomes valid immediately.
First confirm	The value becomes valid after pressing P

Note

Parameter values that are changed using STARTER or a higher-level control do not have to be acknowledged.

Quick commissioning

This parameter attribute identifies as to whether the parameter is included in the quick commissioning (QC) (P0010 = 1).

Table 4-8 Parameter attributes - Quick commissioning

QC	Description
No	The parameter is not included in the quick commissioning
Yes	The parameter is included in the quick commissioning

Value range

The value range, which is first specified by the data type, is restricted by minimum and maximum values depending on the quantities of the inverter/motor. The values min and max are permanently saved in the inverter and cannot be changed by the user. To support commissioning each write parameter has a default value called factory setting.

Table 4-9 Parameter attributes - Value range

Value range	Description
-	No value entered (e.g.: "r parameter")
Min	Minimum value
Max	Maximum value
Def	Default value

Data sets

A detailed description for the data sets is given in the respective section

Table 4-10 Data sets

BICO	Description
CDS	Command data set
DDS	Drive data set

BICO Technology 5

5.1 BICO Technology Overview

Interconnecting signals (BICO)

A state-of-the-art inverter must be able to interconnect internal and external signals (setpoint or actual values and control or status signal). This interconnection functionality must have a high degree of flexibility in order to be able to adapt the inverter to new applications. Further, a high degree of usability is required, which also fulfills standard applications. To fulfill these requirements BICO technology and fast parameterization using parameters P0700/P1000 are used.

5.2 Using BICO technology

Description

Using BICO technology, process data can be freely interconnected using the "standard" inverter parameterization.

For this all **values** which can be freely interconnected are defined as "**Connectors**" , e.g. frequency setpoint, frequency actual value, current actual value, etc.

All **digital signals** which can be freely interconnected are defined as "**Binectors**" eg. status of a digital input, ON/OFF, message function when a limit is violated etc.

There are many input and output quantities as well as quantities within the closed-loop control which can be interconnected in an inverter. It is possible to adapt the inverter to the various requirements using BICO technology.

Binectors

A binector is a digital (binary) signal without any units, it can take the value 0 or 1. Binectors always refer to functions and are sub-divided into binector inputs and binector outputs (see the table below). In this case, the binector input is always designated using a "P" parameter (e.g. P0840 BI: ON/OFF1), while the binector output is always represented using an "r" parameter (e.g. r1025 BO: FF status).

As can be seen from the examples above, the binector parameters have the following abbreviations in front of the parameter names:

BI: Binector Input, signal sink ("P" parameters)

The BI parameter can be interconnected with a binector output as a source, by entering the parameter number of the binector output (BO parameter) as a value in the BI parameter.

BO: Binector Output, signal source ("r" parameters)

The BO parameter can be used as a source for BI parameters. For a particular interconnection the BO parameter number must be entered into the BI parameter.

Example

Combine the ON/OFF1 command with selecting a fixed frequency.

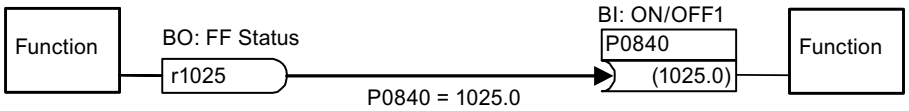

Figure 5-1 Binector output (BO) ==> Binector input (BI)

When selecting a fixed frequency the fixed frequency status bit (r1025) is internally set from 0 to 1.

The source for the ON/OFF1 command is parameter P0840 (default DI0). If the fixed frequency status bit is connected as source for P0840 (P0840 = 1025) the inverter starts with activating a fixed frequency and stops with OFF1 with deactivating.

Binector symbols

Table 5-1 Binector symbols

Abbreviation and symbol	Name	Function
BI	Binector input (signal sink)	Data flow Pxxxx Function BI: ...
BO	Binector output (signal source)	Data flow rxxxx Function BO: ...

Connectors

A connector has a value (16 or 32 bit), which can include a normalized quantity (without dimension) as well as a quantity with associated units. Connectors always refer to functions and are sub-divided into connector inputs and connector outputs. Essentially it is the same as for the binectors, the connector inputs are characterized by a "P" parameter (e.g. P0771 CI: AO (analog output)); while the connector outputs are always represented using an "r" parameter (e.g. r0021 CO: Act. frequency).

As can be seen from the examples above, connector parameters have the following abbreviations in front of the parameter names:

CI: Connector Input, signal sink ("P" parameters)

The CI parameter can be interconnected with a connector output as a source, by entering the parameter number of the connector output (CO parameter) as a value in the CI parameter.

CO: Connector Output, signal source

The CO parameter can be used as source for CI parameters. For a particular interconnection, the CO parameter number must be entered in the CI parameter.

Example

Associate parameter r0755 (Displays analog input, scaled using ASP_{min} and ASP_{max}) with an internal value (main frequency setpoint) to calculate internally scaled value. Thus interconnect the CO Parameter r0755 (Scaled analog input) with CI parameter P1070 (Main setpoint).

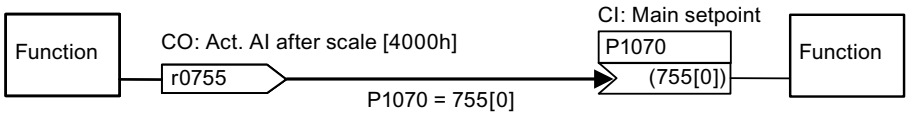

Figure 5-2 Connector output (CO) ==> Connector input (CI)

Connector symbols

Table 5-2 Connector symbols

Abbreviation and symbol	Name	Function
CI	Connector input (signal sink)	Data flow Pxxxx Function CI: ...
CO	Connector output (signal source)	Data flow Function rxxxx CO: ...

Connector and Binector Outputs

Further, there are "r" parameters where several binector outputs are combined in a word (e.g. r0052 CO/BO: Status word 1). This feature reduces, on one hand, the number of parameters and simplifies parameterization using the serial interface (data transfer). These parameters are further characterized by the fact that they do not have any units and each bit represents a digital (binary) signal.

As can be seen from the examples of parameters, these combined parameters have the following abbreviation in front of the parameter names:

CO/BO: Connector Output/Binector Output, signal source ("r")

CO/BO parameters can be used as a source for CI parameters and BI parameters:

- In order to interconnect all of the CO/BO parameters, the parameter number must be entered into the appropriate CI parameter (e.g. P2016[0] = 52).
- When interconnecting a single digital signal, in addition to the CO/BO parameter number, the bit number must also be entered into the CI parameter (e.g. P0731 = 52.3)

Example

###Beispielbeschreibung###

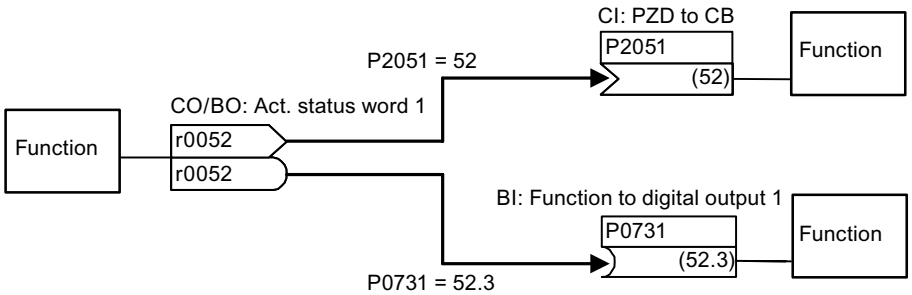

Figure 5-3 **Connector output/Binector output (CO/BO)**

Connector and Binector Output symbols

Table 5-3 Connector and binector output symbols

Abbreviation and symbol	Name	Function
CO BO	Binector/connector output (signal source)	Data flow rxxxx Function CO/BO: ...

In order to interconnect two signals, a BICO setting parameter (signal sink) must be assigned to the required BICO monitoring parameter (signal source).

Note

BICO parameters of the type CO, BO or CO/BO can be multiple used.

Common Inverter Functions 6

6.1 Motor Data Identification

Description

The Inverter has a measuring technique which is used to determine the motor parameters:

Equivalent circuit diagram (ECD)	→	P1900 = 2
Measures Equivalent circuit diagram (ECD) + Magnetizing characteristic (includes P1900 = 2)	→	P1900 = 3

For control-related reasons, it is essential that the motor data identification is performed. Without performing the motor data identification it is only possible to estimate ECD data using information from the motor rating plate. For example, the stator resistance is extremely important for the stability of the closed-loop Vector control and for the voltage boost of the V/f characteristic. The motor data identification routine should be executed, especially if long feeder cables or if third-party motors are being used.

If the motor data identification routine is being started for the first time, then the following data is determined, starting from the rating plate data (rated [nominal] data) with P1900 = 2:

- ECD data
- Motor cable resistance
- IGBT on-state voltage and compensation of IGBT gating dead times.

The rating plate data represents the initialization values for the identification. This is the reason that it is necessary to have the correct input from the rating plate data when determining the data specified above.

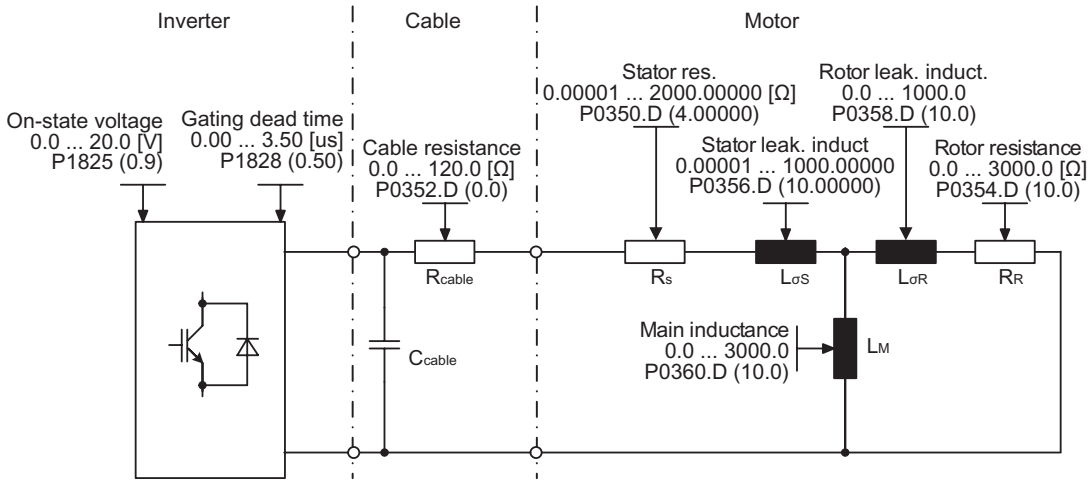

Figure 6-1 Equivalent circuit diagram (ECD)

In addition to the ECD data, the motor magnetizing characteristic (see the figure above) can be determined using the motor data identification (P1900 = 3). If the motor-inverter combination is operated in the field-weakening range (which is above the nominal frequency of the motor), then this characteristic should be determined, especially when Vector control is being used. As a result of this magnetizing characteristic, the Inverter can, in the field-weakening range, accurately calculate the current which is generated in the field and in-turn achieve a higher torque accuracy.

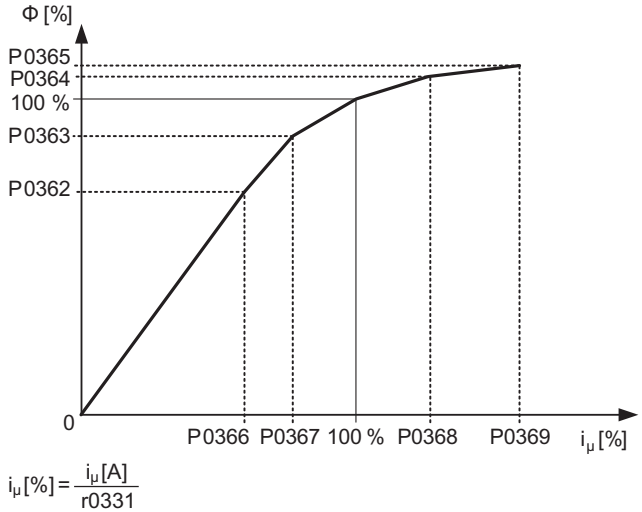

Figure 6-2 Magnetizing characteristic

The motor data identification is carried-out with the motor at a standstill and it takes, including the data calculation per selection (P1900 = 2 or 3), between 20 seconds and 4 minutes to complete, depending on the motor size. While the motor data identification is active A0541 is displayed.

The motor data identification routine must be carried-out with the motor in the **cold** condition so that the motor resistance values saved can be assigned to the parameter of the ambient temperature P0625. Only then is the correct temperature adaptation of the resistances possible during operation.

The motor data identification routine operates with the results of the "Complete parameterization" P0340 = 1 or the motor equivalent diagram data which was last saved. The results become increasingly better the more times that the identification routine is executed (up to 3 times).

⚠ WARNING

It is not permissible to carry-out the motor identification routine for loads which are potentially hazardous (e.g. suspended loads for crane applications). Before starting the motor data identification routine, the potentially hazardous load must be secured (e.g. by lowering the load to the floor or clamping the load using the motor holding brake).

When starting the motor data identification routine, the rotor can move into a preferred position. This is more significant for larger motors.

Note

The equivalent circuit data (P0350, P0354, P0356, P0358, P0360) and the motor cable resistance (P0352) have to be entered as phase values.

It is recommended that the resistance of the motor supply cable (p0352) is entered before starting the standstill measurement (p1900) so it can be included when the stator resistance (p0350) is calculated.

Entering the cable resistance improves the accuracy of thermal resistance adaptation, particularly when long supply cables are used. This governs behavior at low speeds, particularly during sensorless vector control.

It is not necessary to lock the motor rotor for the motor data identification routine but if possible it should be done, e.g. by closing the motor holding brake.

Before starting the motor identification, the correct ambient temperature value should be entered in P0625 (default 20 °C).

The following formula can be applied to check the correctness of the motor rating plate data:

$P_N = \sqrt{3} * V_{NY} * I_{NY} * \cos\phi * \eta \approx \sqrt{3} * V_{N\Delta} * I_{N\Delta} * \cos\phi * \eta$

Where:

P_N	rated motor power
V_{NY}, $V_{N\Delta}$	rated motor voltage (star/delta)
I_{NY}, $I_{N\Delta}$	rated motor current (star/delta)
$\cos\phi$	power factor
η	efficiency

If problems occur while the motor data identification is active, e.g. the current controller oscillates, the rating plate data should be re-checked and an approximately correct magnetizing current entered in P0320. The motor data identification routine should then be re-started by calling P1900 = 2 or P1900 = 3.

A step-by-step description is given in section "Quick Commissioning".

6.2 Motorized Potentiometer (MOP)

Data

This function is not available for ET 200S FC and ET 200pro FC

Parameter range:	P1031 … r1050
Warnings:	-
Faults:	-
Function chart number:	FP3100

Description - Operation

The motorized potentiometer (MOP) function emulates an electromechanical potentiometer to enter setpoints. The MOP value, adjusted using the "MOP UP" (P1035) and "MOP DOWN" (P1036) command is stored in r1050 and can be connected as main or additional setpoint.

The MOP functionality can be selected using digital inputs, operator panel, or a communication interface.

The behavior of the MOP also depends on the duration of the "MOP UP" (P1035) and "MOP DOWN" (P1036) command:

- P1035 / P1036 (MOP UP / MOP DOWN) = 1 for < 1 s:
  Frequency changes in steps of 0.1 Hz.
- P1035 / P1036 (MOP UP / MOP DOWN) = 1 for > 1 s:
  Frequency ramps up (down) with the time of P1047 (P1048) but not faster than 2 s.

Table 6-1 Overview of MOP behavior

Motorized potentiometer		Function
MOP UP	MOP DOWN	
0	0	Setpoint frozen
0	1	decrease setpoint
1	0	increase setpoint
1	1	Setpoint frozen

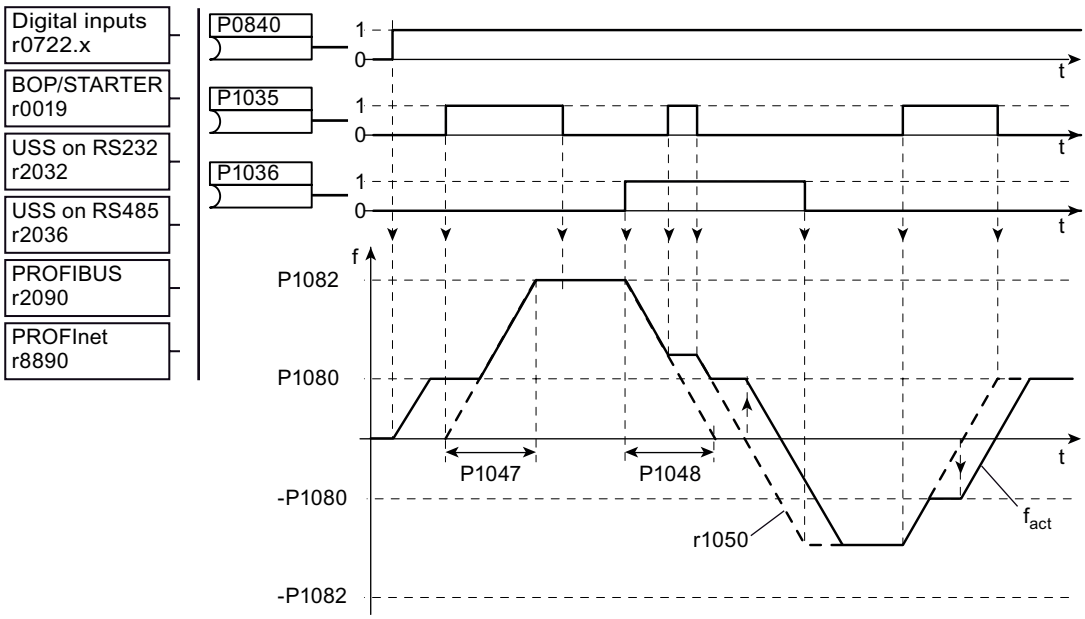

Figure 6-3 Details of MOP behavior

Input values

Table 6-2 Main function parameters

Parameter	Description	Setting
P1035 = …	**MOP UP** possible sources: 722.x (digital inputs), 19.13 (BOP, default), 2032.13 (USS on RS232), 2036.13 (USS on RS485), 2091.13 (PROFIBUS DP) r8890.13 (PROFInet)	
P1036 = …	**MOP DOWN** possible sources: 722.x (digital inputs), 19.14 (BOP, default), 2032.14 (USS on RS232), 2036.14 (USS on RS485), 2091.14 (PROFIBUS DP) r8890.14 (PROFInet)	
P1041 = …	**Select MOP setpoint source,** 0 = manual (default): MOP setpoint via P1035 and P1036, 1 = automatic (MOP setpoint via P1042)	
P1042 = …	**MOP auto setpoint** Setpoint from automatic motorized potentiometer (selected via P1041) (default = 0).	
P1043 = …	**MOP accept ramp generator setpoint** A positive edge via this parameter sets the setpoint source for MOP signal to P1044. 0 = inactive (default) 1 = active	
P1044 = …	**MOP ramp generator setpoint** MOP setpoint activated via a positive edge on P1043. That value becomes active immediately at the MOP output without the ramp up time set in P1047, default = 0.	

Table 6-3 Additional commissioning parameters

Parameter	Description	Setting
P1031 = …	**MOP mode** 0: Last MOP setpoint not saved in P1040, MOP UP/DOWN requires an ON command to become active (default). 1: Last MOP setpoint saved in P1040, MOP UP/DOWN requires an ON command to become active. 2: Last MOP setpoint not saved in P1040, MOP UP/DOWN active without additional no ON command. 3: Last MOP setpoint saved in P1040, MOP UP/DOWN active without additional no ON command.	
P1032 = …	**Inhibit reverse direction of MOP** 0: setpoint inversion allowed (default) 1: setpoint inversion inhibited	
P1040 = …	**Setpoint of the MOP** -650 … 650 Hz: Determines MOP setpoint (default = 5 Hz)	
P1047 = …	**MOP ramp-up time** 0 … 1000 s: Sets the ramp up time from standstill up to maximum motor frequency for the MOP ramp generator (default = 10 s).	
P1048 = …	**MOP ramp-down time** 0 … 1000 s: Sets the ramp down time from maximum motor frequency down to standstill for the MOP ramp generator (default = 10 s).	

Output value

r1045	**MOP ramp generator input frequency** input frequency of ramp generator
r1050	**Actual Output frequency of the MOP**

Additional parameters regarding the MOP function

Parameter	Description	Setting
P1080 = …	**Min. frequency** 0 (default) … 650 Hz: Lower limit of the motor frequency, irrespective of frequency setpoint.	
P1082 = …	**Max. frequency** 0 … 650 Hz, (50 Hz default): Upper limit of the motor frequency, irrespective of the frequency setpoint.	

Examples

Table 6-4 MOP setpoint sources

Function	Source		
	BOP	Serial Interface, e.g PROFIBUS	Digitial inputs
P1035 (MOP UP) P1036 (MOP DOWN)	= 19.13 = 19.14	= 2090.13 = 2090.14	= 722.4 (DI4) = 722.5 (DI5)

Table 6-5 MOP setpoint as main setpoint or additional setpoint

Function	Source
P1070 (Main setpoint) P1075 (Additional setpoint)	= r1050 (Output freq MOP)

6.3 Positioning Ramp Down

Data

Parameter range:	P2480 … r2489
Warnings:	-
Faults:	-
Function chart number:	-

Description

The positioning ramp down can be used for applications where it is necessary that a residual distance is moved-through up to the stop dependent on an external event (e.g. BERO switch). In this case, the inverter generates a continuous braking ramp by selecting OFF1 depending on the actual load speed and velocity. The motor will ramp down along this calculated braking ramp to cover the parameterised distance (see figure below).

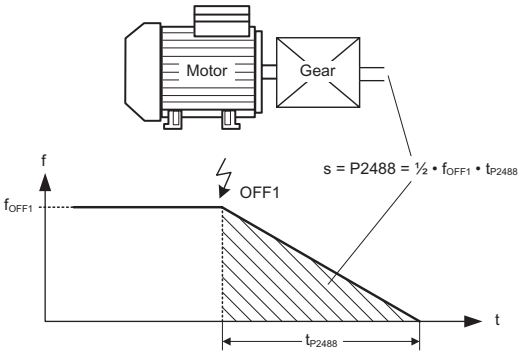

Figure 6-4 Positioning ramp down

To parameterize the position ramp down, enter the remaining distance that must be run through in P2488, referring to the load. In order to carry-out the residual distance calculation on the load side, the mechanical arrangement of the axis (gearbox ratio, linear or rotary axis) must be appropriately parameterized (see figure below).

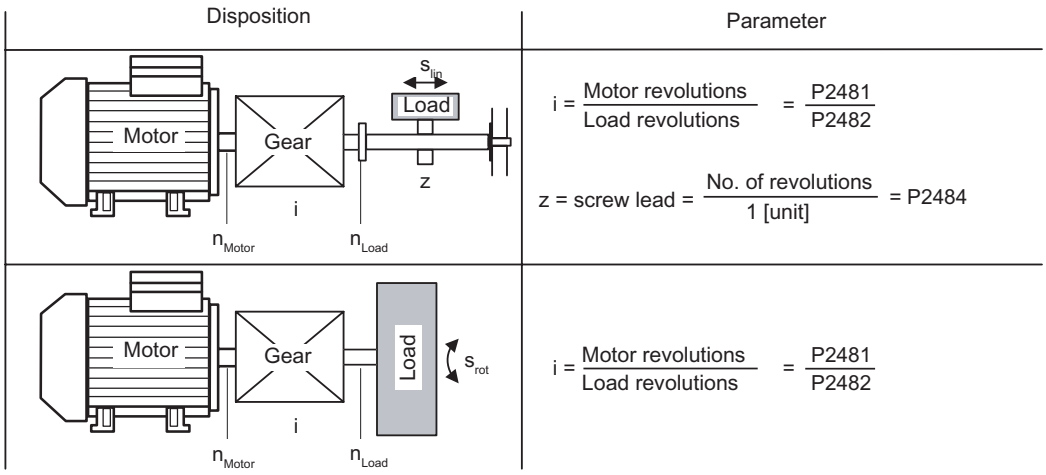

Figure 6-5 Rotary or linear axis

Using this data, the frequency inverter calculates the ratio between the distance and the motor revolutions and can therefore consider the movement on the load side.

Note

The "Switch-off frequency" (P2167) can have an influence on the final positioning result.

Input values

Table 6-6 Main function parameters

Parameter	Description	Setting
P2480 = …	**Enable positioning ramp down manually** Defines the source signal for enabling/disabling positioning	
P2481 = …	**Gearbox ratio input** 0.01 ... 9999.99, default 1.00 Defines ratio between number of motor shaft revolutions to equal one revolution of the gearbox input shaft	
P2482 = …	**Gearbox ratio output** 0.01 ... 9999.99, default 1.00 Defines ratio between number of motor shaft revolutions to equal one revolution of the gearbox output shaft	
P2484 = …	**No. of shaft turns = 1 Unit** 0.01 ... 9999.99, default 1.00 Sets the number of rotations of the motor shaft required to represent 1 unit of user selected unit	
P2487 = …	**Positional error trim value** -99 ... 200, default 0 Offset error corretion due to mechanical error	
P2488 = …	**Distance / No. of revolutions** 0.01 ... 9999.99, Number of units (P2484) for down ramp (default = 1.00) Sets the required distance or number of revolutions	

Output value

r2489	**Tracking Values** Index: 1: Remaining number of shaft revolutions 2: Accumulated shaft revolutions during the positioning ramp down 3: Accumulated encoder increments during the positioning ramp down

6.4 JOG

Data

Parameter range:	P1055 … P1061
Warnings:	A0923
Faults:	-
Function chart number:	FP5000

Description

The JOG function allows:

- to check the functionality of the motor and inverter after commissioning has been completed (first traversing motion, checking the direction of rotation, etc.)
- to bring a motor or a motor load into a specific position
- to traverse a motor, e.g. after a program has been interrupted

The JOG function has the commands "Jog enable", "Jog right" and JOG left". It can be performed via digital inputs, BOP or serial interface.

Table 6-7 Overview of Jog function

JOG enable	JOG right	JOG left	
0	0/1	0/1	No reaction
1	0	1	Inverter accelerates to JOG frequency left (P1059)
1	1	0	Inverter accelerates to JOG frequency right (P1058)
1	1	1	Frequency frozen at the current value with alarm A0293

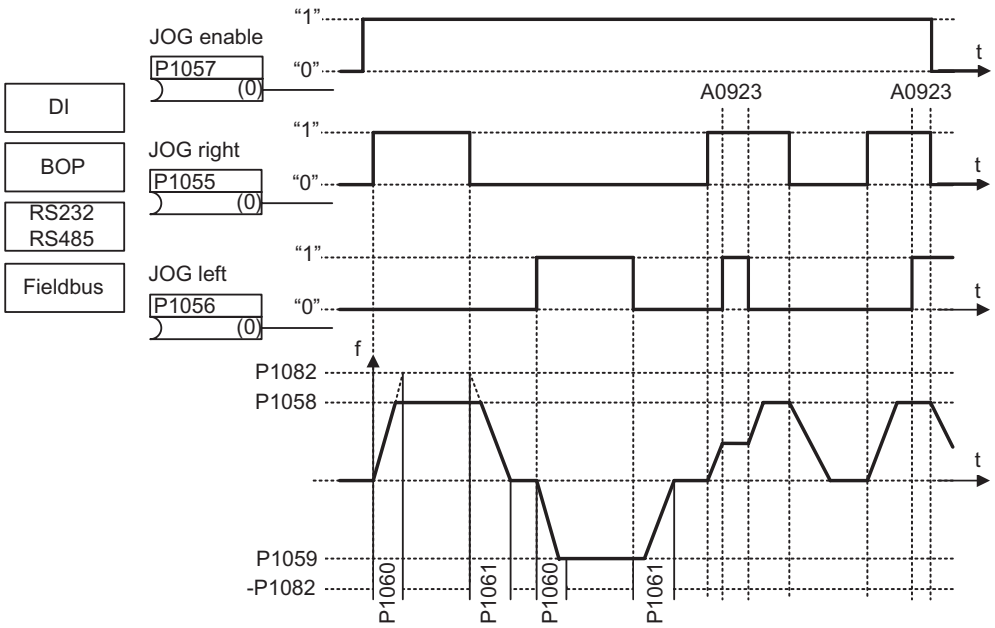

Figure 6-6 JOG counter-clockwise and JOG clockwise

Pressing the appropriate key accelerates the motor to the frequency in P1058 (JOG right) or P1059 (JOG left) at the ramp rate set in P1060. When the key is released, the motor stops, decelerating at the rate set in P1061. If JOG right and JOG left signals are given at the same time, there is no reaction, and a warning A0923 is raised.

Input values

Table 6-8 Main function parameters

Parameter	Description	Setting
P1055 = …	**Enable JOG right** possible sources: 722.x (digital inputs) / 2032.8 (option port) / r2090.8 (serial interface)	
P1056 = …	**Enable JOG left** possible sources: 722.x (digital inputs) / 2032.9 (option port) / r2090.9 (serial interface)	
P1057 = …	**JOG enable** 0 disabled, 1 enabled (default)	

Table 6-9 Additional commissioning parameters

Parameter	Description	Setting
P1058 = …	**JOG frequency right** 0 Hz … 650 Hz, default 5 Hz.	
P1059 = …	**JOG frequency left** 0 Hz … 650 Hz, default 5 Hz.	
P1060 = …	**JOG ramp-up time** 0 s ... 650 s, default 10 s	
P1061 = …	**JOG ramp-down time** 0 s ... 650 s, default 10 s	

Example

JOG function via option port (BOP)

Command source via PROFIBUS communication
P1055 = 2090.8 JOG right via PROFIBUS
P1056 = 2090.9 JOG left via PROFIBUS

Note

The JOG function as used in the described inverter does not correspond to the definition in the PROFIdrive profile.

6.5 Monitoring Functions

6.5.1 General monitoring functions and messages

Data

Parameter range:	P2150 … P2180
	r0052, r0053, r2197, r2198
Warnings:	-
Faults:	-
Function chart number:	FP4100, FP4110

Description

The described inverter has an extensive range of monitoring functions and messages which can be used for open-loop process control. The control can either be implemented in the inverter or using an external control (e.g. PLC). The interlocking functions in the inverter as well as the output of signals for external control are implemented using BICO technology.

The status of the individual monitoring functions and messages are emulated in the following CO/BO parameters:

r0019	CO/BO: BOP control word
r0050	CO/BO: Active command data set
r0052	CO/BO: Status word 1
r0053	CO/BO: Status word 2
r0054	CO/BO: Control word 1
r0055	CO/BO: Supplementary (additional) control word
r0056	CO/BO: Status word – closed-loop motor control
r0403	CO/BO: Encoder status word
r0722	CO/BO: Status, digital inputs
r0747	CO/BO: Status, digital outputs
r1407	CO/BO: Status 2 – closed-loop motor control
r2197	CO/BO: Messages 1
r2198	CO/BO: Messages 2
r9722	CO/BO: SI status word (only available with Fail-safe CUs)

Frequently used monitoring functions/messages including parameter number and bit are shown in the table below.

Table 6-10 Extract of monitoring functions and messages

Functions/states	Parameter/bit number	Function chart
Inverter ready	52.0	-
Inverter ready to run	52.1	-
Inverter running	52.2	-
Inverter fault active	52.3	-
OFF2 active	52.4	-
OFF3 active	52.5	-
On inhibit active	52.6	-
Inverter warning active	52.7	-
Deviation setpoint – actual value	52.8	-
PZD control	52.9	-
|f_act| >= P1082 (f_max)	52.10 / 2197.6	FP4110
Warning: Motor current limit	52.11	-
Brake active	52.12	-
Motor overload	52.13	-
Motor runs right	52.14	-
Inverter overload	52.15	-
DC brake active	53.0	-
|f_act| > P2167 (f_off)	53.1	FP4110
|f_act| > P1080 (f_min)	53.2	FP4100
i_act ≧ P2170	53.3 / 2197.8	FP4110
f_act > P2155 (f_1)	53.4 / 2197.2	FP4100
f_act ≦ P2155 (f_1)	53.5 / 2197.1	FP4100
f_act >= setpoint (f_set)	53.6 / 2197.4	-
Vdc_act < P2172	53.7 / 2197.9	FP4110
Vdc_act > P2172	53.8 / 2197.10	FP4110
Ramping finished	53.9	-
PID output R2294 == P2292 (PID_min)	53.10	FP5100
PID output R2294 == P2291 (PID_max)	53.11	FP5100
|f_act| <= P1080 (f_min)	2197.0	FP4100
f_act > zero	2197.3	FP4110
|f_act| <= P2167 (f_off)	2197.5	FP4110
f_act == setpoint (f_set)	2197.7	FP4110
No-load operation	2197.11	-
|f_act| <= P2157 (f_2)	2198.0	-
|f_act| > P2157 (f_2)	2198.1	-
|f_act| <= P2159 (f_3)	2198.2	-
|f_act| > P2159 (f_3)	2198.3	-
|f_set| < P2161 (f_min_set)	2198.4	-
f_set > 0	2198.5	-
Motor blocked	2198.6	-
Motor stalled	2198.7	-

Functions/states	Parameter/bit number	Function chart
|i_act r0068| < P2170	2198.8	FP4100
|m_act| > P2174 & setpoint reached	2198.9	-
|m_act| > P2174	2198.10	-
Load torque monitoring: Warning	2198.11	-
Load torque monitoring: Fault	2198.12	-

Table 6-11 Messages of SI status word (only available with Fail-safe CUs)

Functions/states	Parameter/bit number	Function chart
Safe torque off (STO) selected	r9772.0	
Safe torque off (STO) activated	r9772.1	
Safe stop 1 (SS1) selected	r9772.2	
Safety monitoring ramp active	r9772.3	
Safely limited speed (SLS) selected	r9772.4	
SLS limit reached	r9772.5	
Passivated STO active, drive fault	r9772.8	
Safe Brake closed	r9772.14	
Dynamisation required	r9772.15	

Note

On the BOP the bit numbers are displayed in hex-format (0..9, A..F).

6.5.2 Load torque monitoring

Data

Parameter range:	P2181 … P2192
	r2198
Warnings:	A0952
Faults:	F0452
Function chart number:	–

Description

This function allows the mechanical force transmission between motor and motor load to be monitored. Typical applications include, for example pulley belts, flat belts or chains, or pulleys for toothed wheels of motor shafts which then transmit circumferential velocities and circumferential forces (see figure).

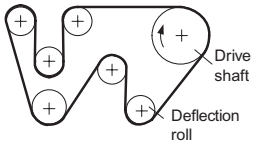

Shaft drive with flat belts

The load torque monitoring function can detect whether the motor load is locked or the force transmission has been interrupted.

For the load torque monitoring function, the actual frequency/torque characteristic is compared with the programmed frequency/torque characteristic (refer to P2182 … P2190). If the actual value lies outside the programmed tolerance bandwidth, then, depending on parameter P2181, either warning A0952 or fault F0452 is generated. Parameter P2192 can be used to delay the output of the warning or fault message. This avoids erroneous alarms which could be caused by brief transient states (see figure below).

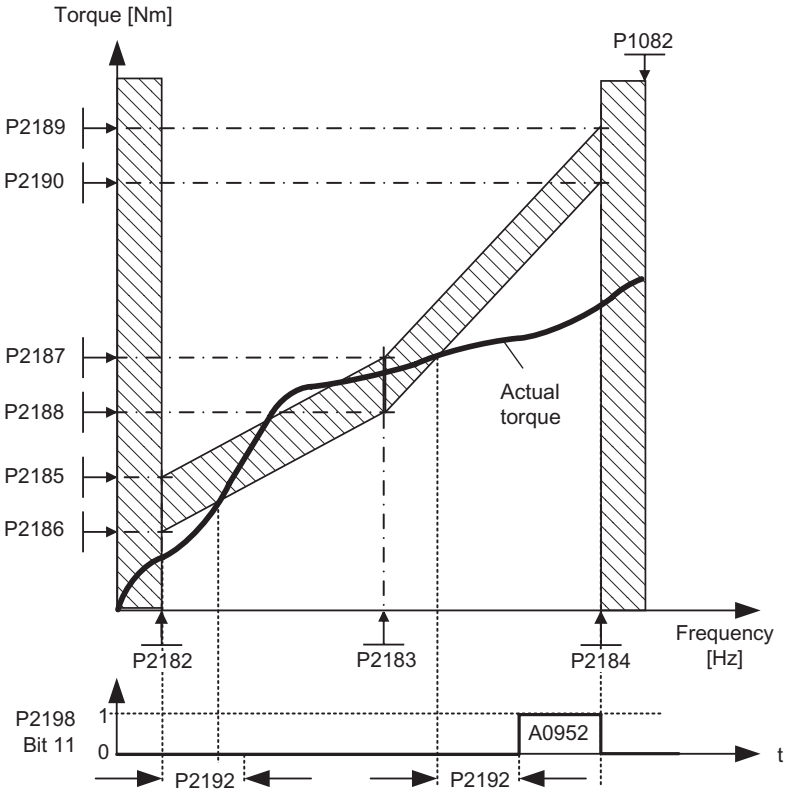

Figure 6-7 Load torque monitoring (P2181 = 1)

The frequency/torque tolerance bandwidth is defined by the gray shaded area in the figure below. The bandwidth is determined by the frequency values P2182 … P2184 including the max. frequency P1082 and the torque limits P2186 … P2189. When defining the tolerance bandwidth it should be ensured that a specific tolerance is taken into account in which the torque values are allows to vary corresponding to the application.

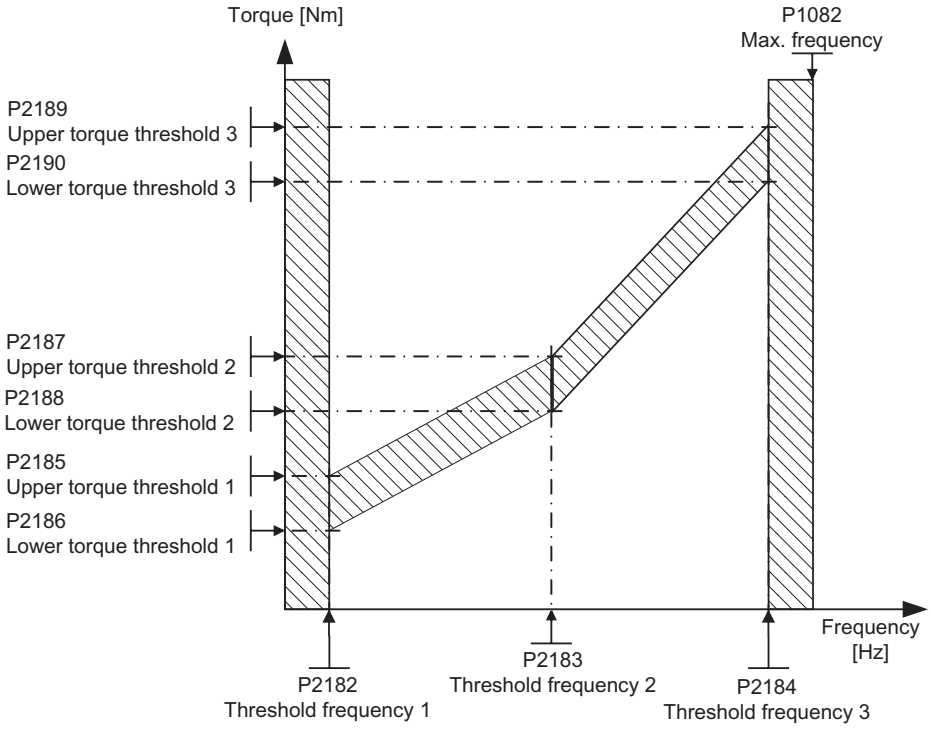

Figure 6-8 Frequency and torque tolerance bandwidth

6.5.3 Power Module Protection

6.5.3.1 General Overload Monitoring

Data

Parameter range:	P0640, r0067, r1242, P0210
Warnings:	A0501, A0502, A0503
Faults:	F0001, F0002, F0003, F0020
Function chart number:	-

Description

Just the same as for motor protection, the inverter provides extensive protection for the power components. This protection concept is sub-divided into two levels:

- Warning and response
- Fault and shutdown

Using this concept, a high utilization of the Power Module components can be achieved without the inverter being immediately shut down.

The monitoring thresholds for the faults and shutdowns are permanently saved in the inverter and cannot be changed by the user. On the other hand, the threshold levels for "Warning and response" can be modified by the user to optimize the system. These values have default settings so that the "Fault and shutdown" thresholds do not respond.

6.5.3.2 Power Module Thermal Monitoring

Data

Parameter range:	P0290 … P0294
	r0036 … r0037
Warnings:	A0504 … A0506
Faults:	F0004 … F0006, F0012, F0022
Function chart number:	-

Description

Similar to motor protection, the main function of the thermal power module monitoring is to detect critical states. Parametrizable responses are provided for the user which allows the motor system to still be operated at the power limit avoiding immediate shutdown. However, the possibility of assigning parameters only involves interventions below the shutdown threshold which cannot be changed by users.

The described inverter has the following thermal monitoring functions:

- **i^2t monitoring**

  The i^2t monitoring is used to protect components which have a long thermal time constant in comparison to the semiconductors. An overload with reference to i^2t is present if the inverter utilization r0036 indicates a value greater than 100% (utilization as a % refers to rated operation).

- **Heatsink temperature**

  The heatsink temperature of the power semiconductors (IGBT) is monitored and displayed in r0037[0].

- **Chip temperature**

  Significant temperature differences can occur between the junction of the IGBT and the heatsink. These differences are taken into account by the chip temperature monitoring and are displayed in r0037[1].

When an overload occurs regarding one of these three monitoring functions, initially, a warning is output. The warning threshold P0294 (i^2t monitoring) and P0292 (heatsink temperature and chip temperature monitoring) can be parameterized relative to the shutdown values.

Example

At the same time that the warning is output, the parameterized responses are initiated using P0290 (default: P0290 = 2). Possible responses include:

- Reducing the pulse frequency (P0290 = 2 or 3)

  This is an extremely effective method to reduce losses in the power module, as the switching losses represent a very high proportion of the overall losses. In many applications, a temporary reduction of the pulse frequency can be tolerated in favor of maintaining the process

Disadvantage
The current ripple is increased when the pulse frequency is reduced. This can result in an increase of the torque ripple at the motor shaft (for low moments of inertia) and an increase in the noise level. When the pulse frequency is reduced this has no influence on the dynamic response of the current control loop as the current control sampling time remains constant!

- Reducing the output frequency (P0290 = 0 or 2)

  This is advantageous if it is not desirable to reduce the pulse frequency or if the pulse frequency is already set to the lowest level. Further, the load should have a characteristic similar to that of a fan, e.g. a square-law torque characteristic for decreasing speed. When the output frequency is reduced, this significantly reduces the inverter output current and in turn reduces the losses in the power module.

- No reduction (P0290 = 1)

  This option should be selected if neither a reduction in the pulse frequency nor a reduction in the output current is being considered. In this case, the inverter does not change its operating point after the warning threshold has been exceeded so that the motor can continue to be operated until the shutdown values are reached. After the shutdown threshold has been reached, the inverter shuts down (trips) with fault F0004. The time which expires up to shutdown is however not defined and depends on the magnitude of the overload. Only the warning threshold can be changed in order to obtain an earlier warning and, if required, externally intervene in the motor process (e.g. by reducing the load, lowering the ambient temperature).

Note

If the inverter fan fails, this would be indirectly detected by the measurement of the heatsink temperature.

A wire breakage or short circuit of the temperature sensor(s) is also monitored.

6.5.4 Thermal Motor Protection and Overload Responses

Data

Parameter range:	P0335, P0601 … P0640
	P0344
	P0350 … P0360
	r0035
Warnings:	A0511
Faults:	F0011, F0015
Function chart number:	–

Description

The thermal motor protection defends the motor effectively against overheating and ensures high motor utilization even if the motor operates at its thermal limits. It can be used with or without a temperature sensor.

Thermal motor protection can be realized using one of the following variants:

- using the thermal motor model without sensor (P0601 = 0)
- using a PTC thermistor (P0601 = 1)
- using a KTY84 sensor (P0601 = 2)
- using a ThermoClick sensor (P0601 = 4)

When the motor is operated at its rated speed and the motor temperature will be calculated after power on (P0621 = 1/2) thermal protection without sensor can be used.

When the motor is operated below its rated speed or if the motor temperature is not calculated after power on (P0621 = 0), one of the above mentioned temperature sensors should be used.

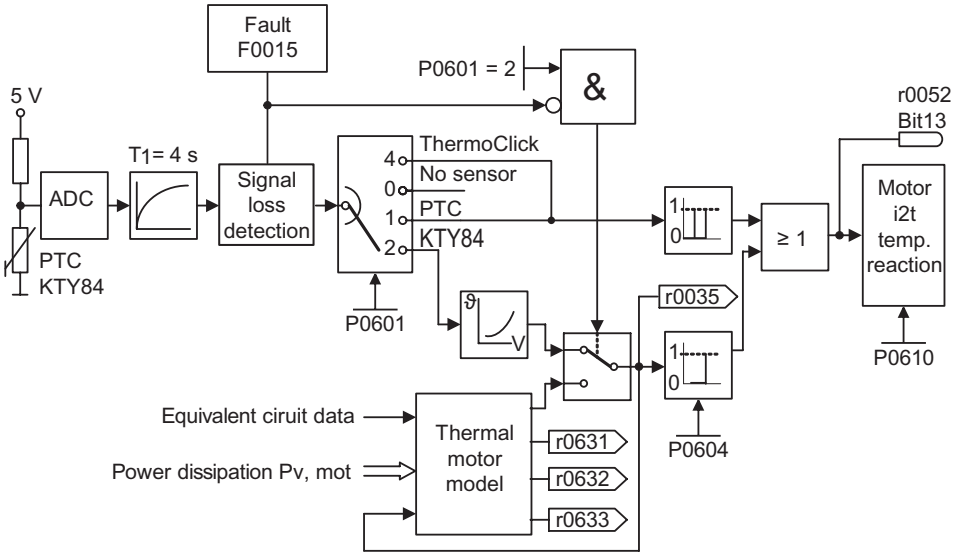

Figure 6-9 Thermal motor protection

Features of thermal motor protection

Common Features

- Motor protection independent from inverter protection
- Separate calculation of the motor temperature for each data set
- Selectable overtemperature reaction via P0610.

Features of thermal motor protection without sensor

- Motor temperature calculation using the thermal motor model
- Adjustable temperature warning threshold (default: P0604 = 130 °C)
- Adjustable trip threshold (P0604 * 1.1)

Features of thermal motor protection with a PTC thermistor

- Measured trip threshold instead of calculated threshold

Features of thermal motor protection with a KTY84 sensor

- Improved protection by evaluation of the KTY84 sensor (advantage: having precise initial temperature after a line supply failure)
- Adjustable temperature warning threshold (default: P0604 = 130 °C)
- Adjustable trip threshold (P0604 * 1.1)

Features of thermal motor protection with a ThermoClick sensor

- Measured trip threshold instead of calculated threshold

Parameters to establish thermal motor protection

Table 6-12 Main parameters for thermal motor protection

Parameter	Description	Setting
P0601 = …	**Motor temperature sensor** 0: No sensor (default); 1: PTC thermistor; 2: KTY84; 4: ThermoClick sensor	
P0604 = …	**Threshold motor temperature** (0° C … 200°C, default: 130 °C) Warning threshold for motor temperature protection. The trip temperature is 10 % higher as the value in P0604. If the actual motor temperature exeeds the trip temperature, the inverter reacts as defined in P0610. This settings are not effective with a PTC thermistor or a ThermoClick sensor	
P0610 = …	**Motor I2t temperature reaction** 0: No reaction, warning only; 1: Warning and Imax reduction (result: reduced frequency and trip with F0011); 2: Warning and trip (F0011) (default)	
P0621 = …	**Motor temp. ident after restart** (0: No identification ; 1: Temperature identification only after power on; 2 : Temperature identification after every power on(default)	
P0625 = …	**Ambient motor temperature** (-40 °C … 80 °C, default: 20 °C) Ambient temperature of motor at motor data identification. Only change when motor is cold. After changing Motor Identification has to be performed.	

Table 6-13 Additional parameters

Parameter	Description	Setting
r0035	**Act. motor temperature**	
p0344	**Motor weight** (1 kg … 6500 kg, default: 9,4 kg) Used in thermal motor model. Normally calculated via P0340, can be changed manually.	
P0622 = …	**Magnetizing time for temp id after start up** (0 ms … 2000 ms, default: 0 ms) Magnetization time for stator resistance identification.	
p0640 = …	**Motor overload factor**	

6.5.4.1 Thermal motor protection without sensor

Description

If the motor temperature without sensor is selected (P0601 = 0), the motor data and ambient temperature, entered during quick commissioning are used to calculate the motor temperature according a build in thermal motor model. This procedure permits reliable and stable operation for standard Siemens motors. For motors from third-party manufacturers it is possible that the calculation can be optimized by adapting the motor weight (P0344).

The trip threshold can be changed via the warning threshold (P0604, default 130 °C, according thermal class B), where the following applies: Trip threshold = P0604 * 1.1.

If the trip threshold is reached the inverter reacts according the setting of P0610.

Additional information about temperature rise classes

In motor technology, temperature rise issues play a decisive role when dimensioning electrical machinery. Different temperature limits apply for the various materials used in electric motors. Depending on the insulating material being used, a differentiation is made according to thermal classes (refer to the motor rating plate) with defined limit temperatures. An excerpt from IEC85 is provided in the table.

Extract from IEC85 thermal classes:

Thermal class	Max. permissible temperature
Y	90 °C
A	105 °C
E	120 °C
B	130 °C
F	155 °C
H	180 °C

Motor temperature calculation using the thermal motor model

The temperature calculation uses a thermal motor model to calculate the temperatures of various locations in the motor.

Note

To get precise values we always recommend to perform a Motor Data Identification after Quick Commissioning so that the electrical equivalent circuit diagram data are determined. This allows a calculation of the losses which occur in the motor which have an impact on the accuracy of the thermal motor model.

The motor temperature calculation is used for each variant of thermal motor protection except using a KTY84 sensor. In this case the values given by the KTY84 sensor are used independent of the P0621settings.

The calculation can be adjusted using P0621 as follows:

- P0621 = 0: No calculation. The value of P0625 (Ambient Motor Temperature) will be used.
- P0621 = 1: The motor temperature will be calculated the first time the motor starts after the power supply has been switched on.
- P0621 = 2: The motor temperature will be calculated each time the motor starts.

Temperature calculating procedure

After power supply is available and a motor ON command is issued, the motor will be magnetized first. If "Motor temperature calculation" is deactivated (P0621 = 0), the motor immediately starts to rotate. If it is activated (P0621 = 1/2), the system waits until magnetization has been completed and until the motor current remains constant over one period (P0622). If it is constant the value is taken to calculate the winding resistance. This is then entered in r0623.

If the motor is cold, the value of r0623 must approximately correspond to the value of P0350; it must be appropriately higher if the motor is not cold. (at 130 °C approximately 150 %).

Note

In the following cases, the motor temperature cannot be calculated and an average temperature of aproximately 47 °C will be used for calculation:

- V/f operation
- Fault when measuring the current, e.g. the current isn't sufficiently constant
- Due to a flying restart the speed is too high.

6.5.4.2 Thermal motor protection with a PTC thermistor

Description

The PTC is connected to the control terminals 14 and 15 of the inverter.

PTC monitoring is activated with the parameter setting P0601 = 1. If the resistance value, connected at the terminals, exceeds 1500 Ω the inverter reacts according the setting of P0610.

If the PTC thermistor recognizes a sensor wire breakage (> 2000 Ω) or a short-circuit (< 10 Ω), the inverter trips with F0015.

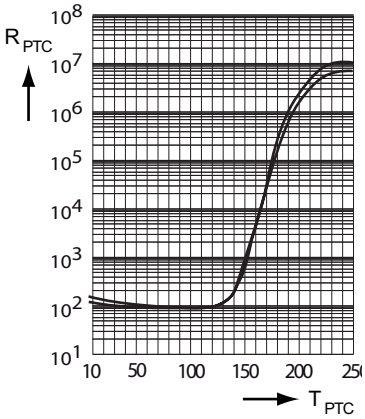

6.5.4.3 Thermal motor protection with a KTY84 sensor

Description

⚠ WARNING

The KTY84 temperature sensor is polarized. Therefore KTY+ must be connected to terminal 14 and KTY- to terminal 15 of the frequency inverter.

Otherwise the thermal motor protection does not work well. This can lead to extremely dangerous overheating of the motor without tripping with F0011 to prevent the motor from burning.

If the motor temperature monitoring with KTY84 is activated (P0601 = 2), the sensor temperature is written into parameter r0035 instead of the value, calculated by the motor model.

The trip threshold can be changed via the warning threshold (P0604, default 130 °C), where the following applies:
Trip threshold = P0604 * 1.1.

If the trip threshold is reached the inverter reacts according the setting of P0610.

If the KTY84 sensor recognizes a sensor wire breakage or a short-circuit, the inverter trips with F0015.

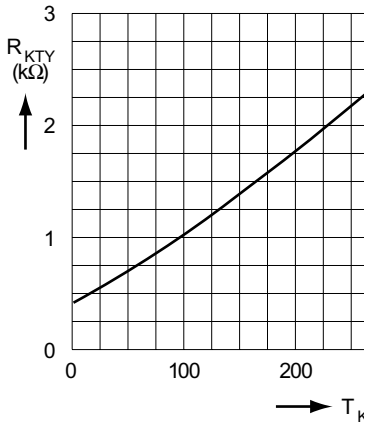

6.5.4.4 Thermal motor protection with a ThermoClick sensor

Using a ThermoClick sensor (P0601 = 4)

The thermoClick sensor is connected to the control terminals 14 and 15 of the inverter.

ThermoClick sensor monitoring is activated with the parameter setting P0601 = 4. If the switching threshold of the thermoClick sensor is reached, the inverter reacts according the settings in P0610.

With a thermoClick sensor a short circuit will not be detected. A wire breakage will be identified as motor overtemperature and the inverter reacts according the setting in P0610.

6.6 Restart Functions

6.6.1 Automatic restart

Data

Parameter range:	P1210, P1211
Faults:	F0003, F0035
Function chart number:	-

Description

The "automatic restart" function allows the inverter, to quit faults automatically and start again, without a new run command on the next power up.

The "automatic restart" function requires a RUN command, both prior to the power failure and on power up, to operate.

The automatic restart function has to be parametrized via P1210 (Automatic restart behavior) and P1211 (number or restart attempts). The restart attempts can be set from 0 … 10 (default = 3). The number is internally decremented after each unsuccessful attempt. After all attempts have been made automatic restart is cancelled with the message F0035. After a successful start attempt, the counter is again reset to the initial value.

Note

The automatic restart function should not be used when the inverter is conected via a fieldbus system to a higher level control system. If, in this case, a line undervoltage or a line supply failure occurs we recommend to switch the inverter off and on again if the line supply is available again.

⚠ CAUTION

***) Automatic restart with external 24 V supply**

If the Control Unit is powered by an external 24 V supply and the line supply fails, the Power Module will lose power, but the Control Unit will remain active. If this situation occurs, the Control Unit will not perform an automatic restart. This situation could result in the inverter being in an undetermined state and may not react as predicted.

Command source for automatic restart

The automatic restart function has been designed to ignore command source time-outs. That is, if the command source is, for example, a PLC and the PLC times-out an automatic restart will not be initiated.

On power failures (line supply failure), a differentiation is made between the following conditions:

- **Line undervoltage**

  "Line undervoltage" is an extremely short supply interruption. A BOP e.g. - if installed - hasn't gone dark. The LED SF will not be on due to a line undervoltage.

- **Line supply failure**

  A "Line supply failure" represents a longer line supply interruption. If, in case of a line supply failure, the line supply returns the LED SF will be on.

Table 6-14 Overview of Automatic restart function

Automatic Restart (P1210)	Number of restart attempts (P1211)	
0	disabled	--
1	disabled	Trip reset after power on
2	disabled	Restart after line supply failure
3	enabled	Restart after line supply failure/undervoltage or fault
4	disabled	Restart after line undervoltage
5	disabled	Restart after line supply failure and fault
6	enabled	Restart after line supply failure/undervoltage or fault

Note

In case of using a BOP, a pending Automatic Restart is displayed via 00 10.

The automatic restart function P1210 is shown in the table below as a function of external states/events.

Table 6-15 Overview of Automatic restart behavior

P1210	ON always active				Inverter ON and no RUN command	
	Fault F0003 for		All other faults for		All faults + F0003 for line supply failure	No line supply failure
	Line supply failure	Line undervoltage	Line supply failure	Line undervoltage		
0	No action	No action	No action	No action	No action	No action
1	Fault ack	No action	Fault ack	No action	Fault ack	No action
2	Fault ack + restart	No action see Caution*)	No action	No action	No action	Restart
3	Fault ack + restart	Fault ack + restart	Fault ack + restart	Fault ack + restart	Fault ack + restart	No action
4	Fault ack + restart	Fault ack + restart	No action	No action	No action	No action
5	Fault ack + restart	No action see Caution*)	Fault ack + restart	No action	Fault ack + restart	Restart
6	Fault ack + restart	Fault ack + restart	Fault ack + restart	Fault ack + restart	Fault ack + restart	Restart

⚠ WARNING

When the automatic restart function is activated and line supply failure lasts for a period of e.g. 5 s or longer it may be assumed that the inverter is powered-down. However, when the line supply returns, the inverter can automatically start to run again without any operator intervention.

If the operating range of the motor is entered in this status, this can result in death, severe injury or material damage.

Note

In addition the "Flying restart" function must be activated if, for an automatic restart, the inverter is to be connected to a motor which may already be spinning.

6.6.2 Flying restart

Data

Parameter range:	P1200, P1202, P1203 r1204, r1205
Warnings:	-
Faults:	-
Function chart number:	-

Description

The "Flying restart" function, enabled through P1200, allows the inverter to be switched to a spinning motor. Whereas with high possibility a fault with overcurrent F0001 would occur by not using this function, as the flux must first be established in the motor and the V/f control or closed-loop Vector control must be set corresponding to the actual motor speed. The inverter frequency is synchronized with the motor frequency using the flying restart function.

When the inverter is normally powered-up it is assumed that the motor is stationary, the inverter accelerates it from a standstill and the speed is ramped-up to the entered setpoint. However, in many cases these conditions are not fulfilled, e.g. a fan motor - when the inverter is powered-down the air flowing through the fan can cause it to rotate in any direction.

⚠ WARNING

Drive starts automatically

Keep everybody informed after enabling this function. The drive will start automatically.

Flying restart without speed encoder

Depending on parameter P1200, after the demagnetization time has expired P0347, flying restart is started with the maximum search frequency $f_{search,max}$ (see figure below).

$$f_{search,max} = f_{max} + 2 \cdot f_{slip,standard} = P1802 + 2 \cdot \frac{r0330}{100} \cdot P0310$$

This is realized either after the line supply returns when the automatic restart function has been activated or after the last shutdown with the OFF2 command (pulse inhibit).

- V/f characteristic (P1300 < 20):
  The search frequency is reduced, as a function of the DC link current with the search rate which is calculated from parameter P1203. In so doing, the parametrizable search current P1202 is impressed. If the search frequency is close to the rotor frequency, the DC link current suddenly changes because the flux in the motor establishes itself. Once this state has been reached, the search frequency is kept constant and the output voltage is changed to the voltage value of the V/f characteristic with the magnetization time P0346 (see figure below).
- Closed-loop Vector control without encoder (SLVC):
  Starting from the initial value, the search frequency approaches the motor frequency with the impressed current P1202. The motor frequency has been found if both frequencies coincide. The search frequency is then kept constant and the flux setpoint is changed to the rated flux with the magnetization time constant (dependent on P0346).

After the magnetization time P0346 has expired, the ramp-function generator is set to the speed actual value and the motor is operated with the actual reference frequency.

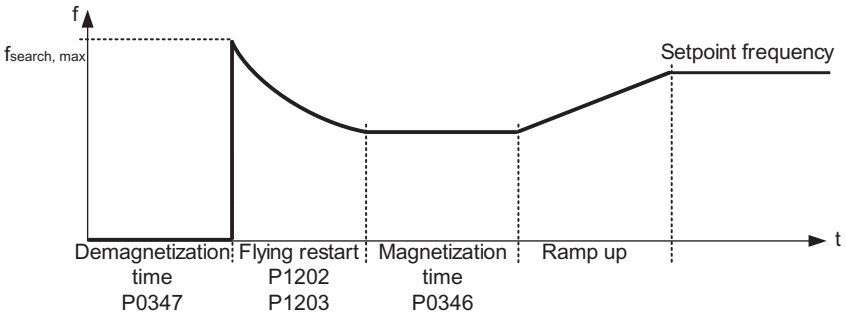

Figure 6-10 Flying restart

Flying restart with speed encoder

Depending on parameter P1200, after the demagnetization time P0347 expires, the flying restart is started with the maximum search frequency $f_{search,max}$.

1. After the line supply returns with the automatic restart active
2. After the last shutdown using the OFF2 command (pulse inhibit)

- V/f characteristic (P1300 < 20):
  For V/f control, the output voltage of the inverter is linearly increased from 0 to the V/f characteristic value within the magnetization time P0346.
- Closed-loop Vector control with speed encoder (VC):
  For the closed-loop Vector control, the necessary magnetization current is established within the magnetization time P0346.

After the magnetization time P0346 has expired, the ramp-function generator is set to the speed actual value and the motor is operated at the actual setpoint frequency.

Table 6-16 Overview of Flying restart function

P1200	Flying restart active	Search direction
0	Disabled	-
1	Always	Start in the direction of the setpoint
2	For line supply on and fault	Start in the direction of the setpoint
3	For fault and OFF2	Start in the direction of the setpoint
4	Always	Only in the direction of the setpoint
5	For line supply on, fault and OFF2	Only in the direction of the setpoint
6	For fault and OFF2	Only in the direction of the setpoint

Input values

Table 6-17 Main function parameters

Parameter	Description	Setting
P1200 = …	Flying start 0 disabled (default), 1 - 6 enabled	

Table 6-18 Additional commissioning parameters

Parameter	Description	Setting
P1202 = …	Motor-current: Flying start 10 % ... 200 %, default 100 %	
P1203 = …	Search rate: Flying start 10 % ... 200 %, default 100 %	

⚠ WARNING

When "Flying restart" is activated (P1200 > 0), although the motor is at a standstill and the setpoint is 0, it is possible that the motor can be accelerated as a result of the search current!

If the operating range of the motor is entered when the motor is in this state, this can result in death, severe injury or material damage.

Note

If a higher value is entered for the search velocity P1203 this results in a flatter search curve and therefore to an extended search time. A lower value has the opposite effect.

For "Flying restart", a braking torque is generated which can cause motors, with low moments of inertia, to brake.

For group motors, "Flying restart" should not be activated due to the different characteristics of the individual motors when coasting down.

6.7 Data Sets

Description

For many applications it is advantageous if several parameters can be simultaneously changed, during operation or in the ready state, using an external signal.

This functionality can be elegantly implemented using indexed parameters. In this case, as far as the functionality is concerned, the parameters are combined to form groups/data sets and are indexed. By using indexing, several different settings can be saved for each parameter which can be activated by changing-over the data set (e.g. toggling between indexes).

The following data sets apply:

- Command Data Set CDS
- Drive Data Set DDS

Three independent settings are possible for each data set. These settings can be made using the index of the particular parameter:

- CDS0 … CDS2
- DDS0 … DDS2

Command Data Set

Those parameters (connector and binector inputs) which are used to control the inverter and enter a setpoint, are assigned to the command data set (CDS). The signal sources for the control commands and setpoints are interconnected using BICO technology. For that the connector and binector inputs are assigned corresponding to the connector and binector outputs as signal sources. A command data set includes:

Command sources and binector inputs for control commands (digital signals) e.g.	
Selects the command source	P0700
ON/OFF1	P0840
OFF2	P0844
JOG Enable	P1057
Enable JOG right	P1055
Enable JOG left	P1056

Setpoint sources and connector inputs for setpoints (analog signals) e.g.	
Selection of frequency setpoint	P1000
Selection of main setpoint	P1070
Selection of additional setpoint	P1075

The parameters, combined in a command data set, are designated with [x] in the Parameter Manual in the index field.

Index	
Pxxxx[0]	Command data set 0 (CDS0)
Pxxxx[1]	Command data set 1 (CDS1)
Pxxxx[2]	Command data set 2 (CDS2)

Note

A complete list of all of the CDS parameters is contained in the Parameter Manual.

It is possible to parameterize up to three command data sets. This makes it easier to toggle between various pre-configured signal sources by selecting the appropriate command data set. A frequent application involves, for example, the ability to toggle between automatic and manual operation.

Note

The parameters will be altered during data set switchover in the state "Ready" and "Run".

The following parameters will not be changed in the state "run:
P0700, P0701, P0702, P0703, P0704, P0705, P0706, P0707, P0708, P0709, P0712, P0713, P0719, P0800, P0801, P0840, P0842, P0844, P0845, P0848, P0849, P0852, P1000, P1020, P1021, P1022, P1023, P1035, P1036, P1055, P1056, P1070, P1071, P1075, P1076, P1110, P1113, P1124, P1140, P1141, P1142, P1330, P1500, P1501, P1503, P1511, P1522, P1523, P2103, P2104, P2106, P2220, P2221, P2222, P2223, P2235, P2236.

The described inverter has an integrated copy function which is used to transfer command data sets.

This can be used to copy CDS parameters corresponding to the particular application. P0809 is used to control the copy operation as follows:

Copy operation controlled with P0809	
P0809[0]	Number of the command data set which is to be copied (source)
P0809[1]	Number of the command data set into which data is to be copied (target)
P0809[2]	Copying is started, if P0809[2] = 1
	Copying has been completed, if P0809[2] = 0

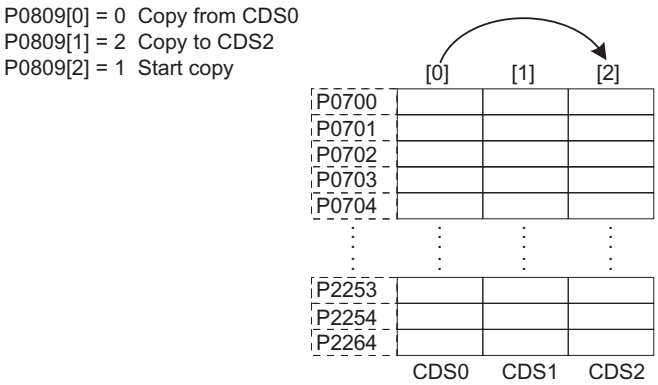

Figure 6-11 Copying from a CDS

The command data sets are changed-over using the BICO parameters P0810 and P0811, whereby the active command data set is displayed in parameter r0050 (see figure below). Changeover is possible both in the "Ready" as well as in the "Run" states.

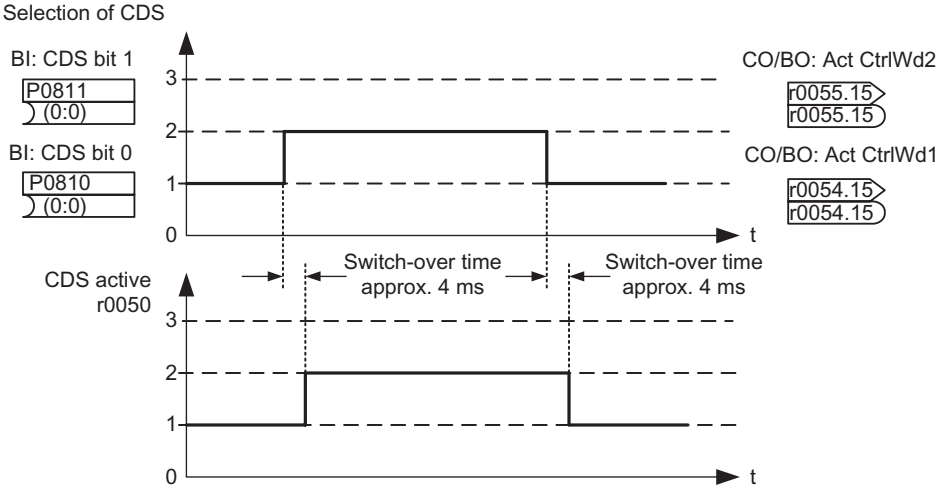

Figure 6-12 Changing-over a CDS

The currently active command data set (CDS) is displayed using parameter r0050:

	selected CDS		active CDS
	r0055 Bit 15	r0054 Bit 15	r0050
CDS0	0	0	0
CDS1	0	1	1
CDS2	1	0	2
CDS2	1	1	2

Figure 6-13 Active command data set (CDS)

Example

The command source (e.g. terminals → BOP) or setpoint (frequency) source (e.g. AI → MOP) should be changed-over using a terminal signal (e.g. DI3) as a function of an external event (e.g. the higher-level control system fails). A typical example in this case is a mixer, which may come to an uncontrolled stop when the control fails.

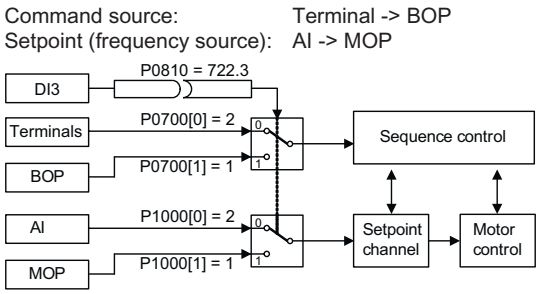

Figure 6-14 Changing-over between the control and setpoint source

CDS0: Command source via terminals and setpoint source via analog input (AI)

CDS1: Command source via BOP and setpoint source via MOP

CDS changeover is realized using digital input 3 (DI3)

Commissioningsteps:

1. Carry-out commissioning for CDS0 (P0700[0] = 2 and P1000[0] = 2)
2. Connect P0810 (P0811 if required) to the CDS changeover source (P0704[0] = 99, P0810 = 722.3)
3. Copy from CDS0 to CDS1 (P0809[0] = 0, P0809[1] = 1, P0809[2] = 1)
4. Adapt CDS1 parameters (P0700[1] = 1 and P1000[1] = 1)

Drive data set

The drive data set (DDS) contains various setting parameters which are of significance for the open-loop and closed-loop control of a motor:

Drive and encoder data, e.g.	
Select motor type	P0300
Rated motor voltage	P0304
Main inductance	P0360
Select encoder type	P0400

Various closed-loop control parameters, e.g.	
Fixed frequency 1	P1001
Min. frequency	P1080
Ramp-up time	P1120
Control mode	P1300

The parameters, combined in a drive data set, are designated with an [x] in the Parameter Manual in the index field:

Index	
Pxxxx[0]	Drive data set 0 (DDS0)
Pxxxx[1]	Drive data set 1 (DDS1)
Pxxxx[2]	Drive data set 2 (DDS2)

Note

A complete list of all of the DDS parameters is contained in the Parameter Manual.

It is possible to parameterize several drive data sets. This makes it easier to toggle between various inverter configurations (control mode, control data, motors) by selecting the appropriate drive data set (see figure below).

Note

The parameters will be altered during data set switchover in the state "Ready" and "Run".

The following parameters will not be changed in the state "run": P0300, P0304, P0305, P0307, P0308, P0309, P0310, P0311, P0314, P0320, P0335, P0340, P0400, P0405, P0408, P0410, P0491, P0492, P0500, P1082, P1240, P1256, P1300, P1320, P1322, P1324, P1820, P2000, P2001, P2002, P2003, P2004, P2181.

Just like the command data sets, it is possible to copy drive data sets within the described inverter. P0819 is used to control the copy operation as follows:

Copy operation controlled with P0819	
P0819[0]	Number of the drive data set which is to be copied (source)
P0819[1]	Number of the drive data set into which data is to be copied (target)
P0819[2]	Copying is started, if P0819[2] = 1
	Copying has been completed, if P0819[2] = 0

P0819[0] = 0 Copy from DDS0
P0819[1] = 2 Copy to DDS2
P0819[2] = 1 Start copy

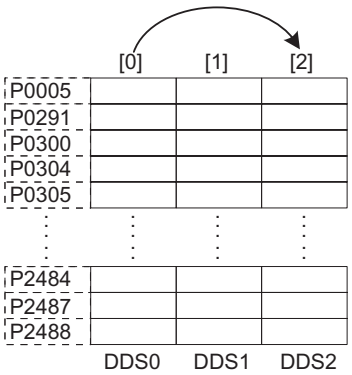

Figure 6-15 Copying from a DDS

Drive data sets are changed-over using the BICO parameter P0820 and P0821 whereby the active drive data set is displayed in parameter r0051 (see figure below). Drive data sets can only be changed-over in the "Ready" state and this takes approximately 50 ms.

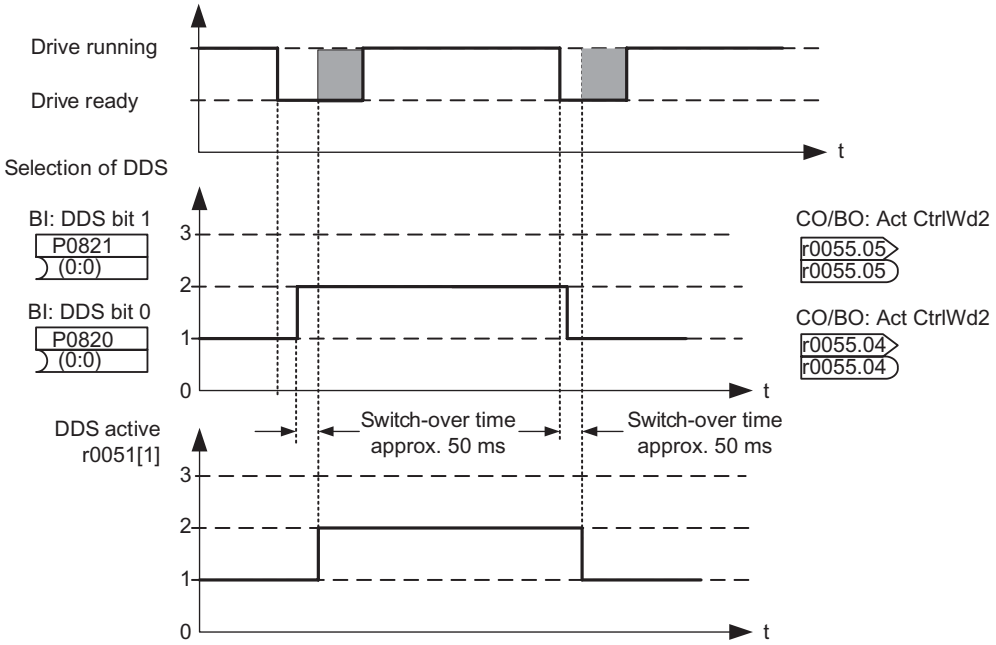

Figure 6-16 Changing-over a DDS

The currently active drive data set (DDS) is displayed using parameter r0051[1]:

	selected DDS			active DDS
	r0055 Bit05	r0055 Bit04	r0051 [0]	r0051 [1]
DDS0	0	0	0	0
DDS1	0	1	1	1
DDS2	1	0	2	2
DDS2	1	1	2	2

Figure 6-17 Active drive data set (DDS)

Example

The inverter should be switched-over from motor 1 to motor 2.

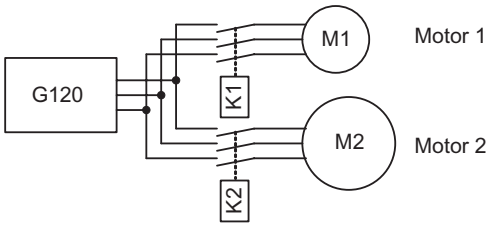

Figure 6-18 Changeover from motor 1 to motor 2

Commissioning steps with 2 motors (motor 1, motor 2):

1. Carry-out commissioning at DDS0 with motor 1; adapt the remaining DDS0 parameters.
2. Connect P0820 (P0821 if required) to the DDS changeover source
   (e.g. via DI4: P0705[0] = 99, P0820 = 722.4).
3. Changeover to DDS1 (check using r0051).
4. Carry-out commissioning at DDS1 with motor 2; adapt the remaining DDS1 parameters.

6.8 Electro-Mechanical Brakes

Functions of the electro-mechanical brake

⚠ WARNING

Dimensioning the electro-mechanical motor brake

The electro-mechanical brake must be dimensioned that, in case of a fault, the complete motor can be braked to zero from any possible operational speed. If no electro-mechanical brake is present, the machine manufacturer must adopt other suitable measures to protect against motion after the energy supply to the motor has been cut (e.g. to protect against sagging loads).

The electro-mechanical brake can be used as motor holding brake or as an instantaneous brake.

- As motor holding brake it is used to prevent the motor from unintended rotation (e.g. lifting or lowering the load in lifting applications) by applying torque in order to compensate brake release times. The motor holding brake functionality is triggered by an OFF1 or OFF3 command. For details see section " Motor Holding Brake (Page 74) ".
- As an instantaneous brake it slows down the motor from any speed down to zero speed as fast as possible. The related brake release times are not considered in the case. The instantaneous brake function is triggered by an OFF2 command. The OFF2 command can be given manually or triggered automatically by an internal fault condition on the inverter. On Fail-safe inverters this braking function can also be triggered by the Safe Torque Off (STO) command or the passivated STO fault condition. (refer to the section " Safe Brake Control (Page 231) ")

To keep the electro-mechanical brake open, it must be energized. When power is lost, or removed from the brake, the brake closes and the motor shaft is held in position.

Note

If an electro-mechanical brake is attached, parameter P1215 needs to be enabled, otherwise it will not be possible to run the motor!

6.8.1 Motor Holding Brake

Data

Parameter range:	P0346, P1080, P1215 … P1218 r0052 bit 12
Warnings:	-
Faults:	-
Function chart number:	-

Description

For motors which must be secured when powered-down to prevent undesirable movement, the inverter brake sequence control (enabled through P1215) can be used to control the motor holding brake.

Before opening the brake, the pulse inhibit must be removed and a current impressed which keeps the motor in that particular position. In this case, the impressed current is defined by the min. frequency P1080. A typical value in this case is the rated motor slip r0330. The rated rated motor slip r0330 indicates the value in percent of slip against synchronous run. Thus you have to determine the slip frequency in Hz as shown in the example below:

P0310 x (r0330/100) = slip frequency

- P0310 = 50 Hz
- r0330 = 5 %

50 x (5/100) = 50 x 0.05 = 2.5 Hz

Slip frequency 5 % = 2.5 Hz

In order to protect the motor holding brake from continuous damage, the motor may only continue to move after the brake has been released (brake release times are between 35 ms and 500 ms). This delay must be taken into account in parameter P1216 "Holding brake release delay" (see figure below).

If the motor is switched off using OFF1 or OFF3 the motor ramps down until the minimum frequency, P1080, is reached before the status signal r0052 bit 12 "Brake active" is reset. The motor operates at this frequency until the brake has been applied (closing times of brakes are between 15 ms and 300 ms). The actual time is specified using min (P1217, P1227) ("Holding time after ramp down", "Zero speed detection monitoring time").

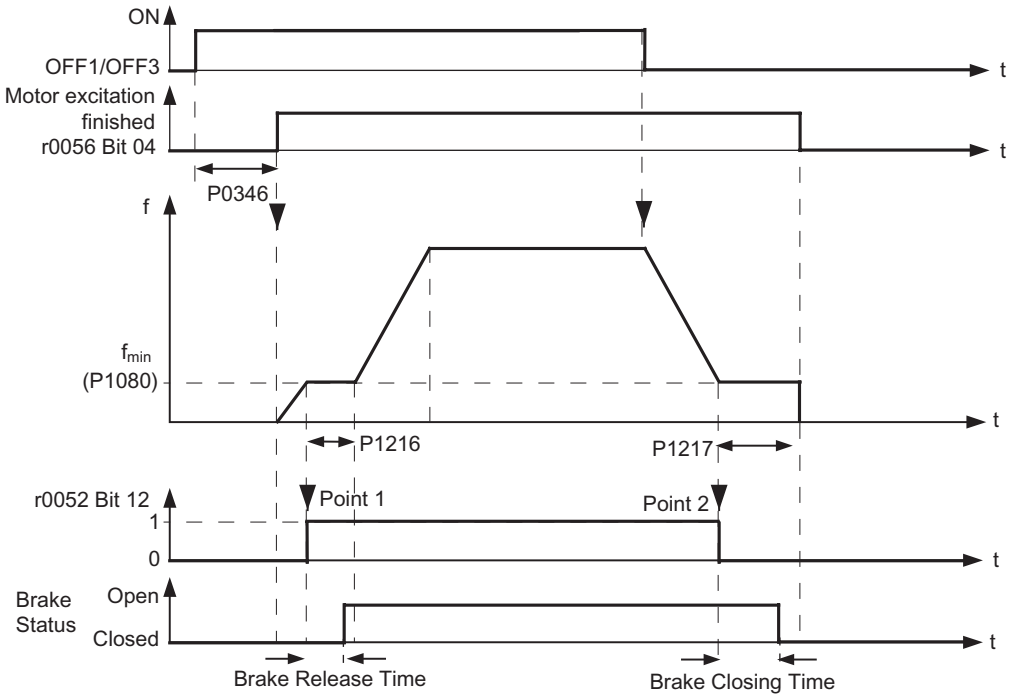

Figure 6-19 P1215 Motor Holding Brake OFF1/Off3

If the motor is switched off using an OFF2 command, the status signal r0052 bit 12 "Brake active" is reset, independent of the motor state. This means that the brake closes immediately after an OFF2 command if the brake closing time has finished. (instantaneous brake).

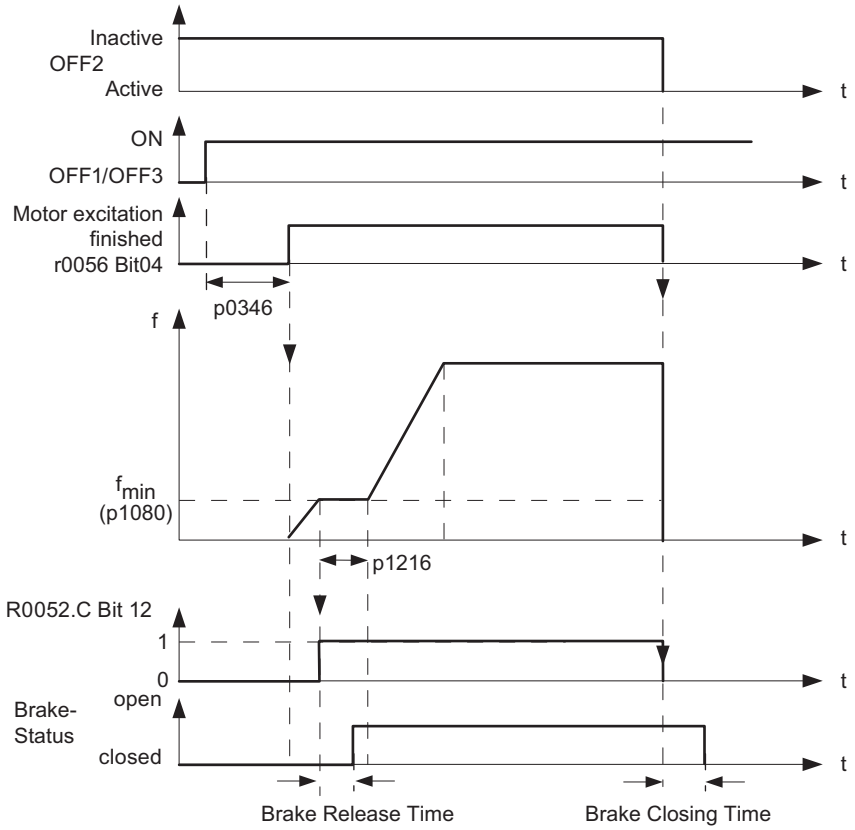

Figure 6-20 Motor holding brake after ON/OFF2

The mechanical brake is controlled using the status signal r0052 bit 12 "Brake active" of the brake control. This signal is connected to terminal A and B of the power module.

⚠ WARNING

It is not sufficient to select the status signal r0052 bit 12 "Brake active" in P0731 … P0733. In order to activate the motor holding brake, in addition, parameter P1215 must also be set to 1.

If the inverter controls the motor holding brake, then a series commissioning may not be carried-out for potentially hazardous loads (e.g. suspended loads for crane applications) unless the load has been secured. Potentially hazardous loads can be secured as follows before series commissioning is started:

- Lower the load to the floor, or
- Clamp the load using the motor holding brake
  (**Caution**: During the series commissioning, the inverter must be prevented from controlling the motor holding brake).

Note

Motors have optional holding brakes which are not designed to be used as brakes for normal operation. The holding brakes are only designed for a limited number of emergency braking operations / motor revolutions with the brake closed (refer to the Catalog data).

When commissioning a motor with integrated holding brake it is therefore absolutely imperative that it is ensured that the holding brake functions perfectly. A "clicking noise" in the motor indicates that the brake has been correctly released.

Before the motor holding brake is applied, a torque must be established that maintains the motor at the required position. The pulses, from the inverter, must be enabled to allow the necessary torque to be generated. The torque is defined by the minimum frequency in parameter P1080. A typical value for this is the rated motor slip r0330. Additionally, this torque can be modified using the following parameters:

- V/f control – boost parameter P1310
- SLVC – boost parameters P1610 and P1611
- VC – supplementary torque setpoint P1511

The motor holding brake can be permanently damaged, if the motor shaft is moved when the motor holding brake is applied. It is imperative that the release of the motor holding brake is timed correctly.

Opening the Motor Holding Brake via P1218

In a conveyor system it is sometimes necessary to position the conveyor system manually.

To achieve this you can override the brake active signal (r0052.12) using P1218, even if the motor has been switched off or has not reached it's minimum frequency (P1080).

If the motor holding brake is active, due to a safe-stop, P1218 will be ignored.

⚠ WARNING

Since this procedure will override the active brake signal and force the brake to open, even if the motor is switched off, the user must ensure that any load held by the motor is secured before performing the override.

Input values

Table 6-19 Main function parameters

Parameter	Description	Setting
P1215 = …	**Holding brake enable** 0 disabled (default), 1 enabled	

Table 6-20 Additional commissioning parameters

Parameter	Description	Setting
P0346 = …	**Magnetization time** 0 ... 20 s, default 1 s	
P1080 = …	**Min. frequency** 0 ... 650 Hz, default 0 Hz: Min. motor run frequency irrespective of frequency setpoint	
P1216 = …	**Holding brake release delay** 0 ... 20 s, default 0.1 s	
P1217 = …	**Holding time after ramp down** 0 ... 20 s, default 0.1 s	
P1218 = …	**MHB override** 0 ... 1, default 0	
P1227 = …	**Zero speed detection monitoring time** 0 ... 300 s, default 4 s	

Output value

Parameter	Description	Setting
r0052.12	**Brake active status**	

6.8.2 Instantaneous brake

Data

Parameter range:	P0346, P1080, P1215 … P1217 r0052 bit 12
Warnings:	-
Faults:	-
Function chart number:	-

Description

The instantaneous brake is an electro-mechanical one, being able to brake down the motor from any speed to a standstill. It is activated after an OFF2 command and additional in the case of a fail-safe application after a Safe Torque Off (STO) or a passivated STO fault condition (refer to section " Safe Brake Control (Page 231) ").

The behavior of the instantaneous brake function is described below.

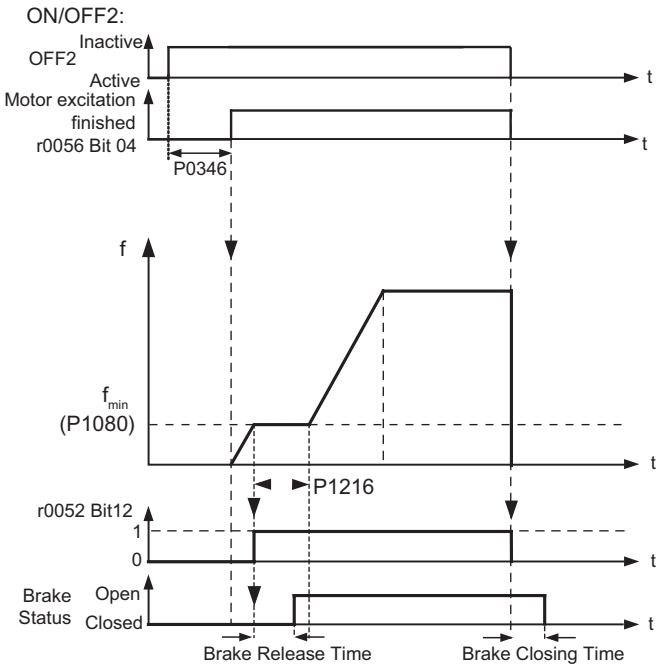

Figure 6-21 Instantaneous Brake

Input values

Table 6-21 Main function parameters

Parameter	Description	Setting
P1215 = …	**Holding brake enable** 0 disabled (default), 1 enabled	

Table 6-22 Additional commissioning parameters

Parameter	Description	Setting
P0346 = …	**Magnetization time** 0 ... 20 s, default 1 s	
P1080 = …	**Min. frequency** 0 ... 650 Hz, default 0 Hz: Min. motor run frequency irrespective of frequency setpoint	
P1216 = …	**Holding brake release delay** 0 ... 20 s, default 0.1 s	
P1217 = …	**Holding time after ramp down** 0 ... 20 s, default 0.1 s	

Output value

Parameter	Description	Setting
r0052.12	**Brake active status**	

⚠ WARNING

Dimensioning the electro-mechanical motor brake

The electro-mechanical brake must be dimensioned that, in case of a fault, the complete motor can be braked to zero from any possible operational speed.

6.9 Setpoint Channel

Description

The setpoint channel (see figure below) forms the coupling element between the setpoint source and the closed-loop motor control. The inverter has a special characteristic which allows the setpoint to be entered simultaneously from two setpoint sources. The generation and subsequent modification (influencing the direction, suppression frequency, up/down ramp) of the complete setpoint is carried-out in the setpoint channel.

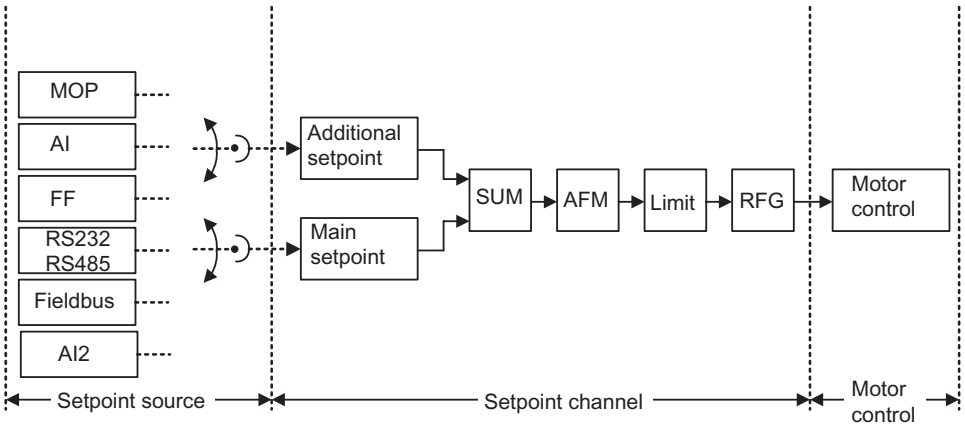

Figure 6-22 Setpoint channel

6.9.1 Summation and modification of frequency setpoint

Data

Parameter range:	P1070 … r1114
Warnings:	-
Fault:	-
Function chart number:	FP5000, FP5200

Description

For applications where the control quantities are generated from central control systems, fine tuning is often required locally on-site (correction quantity). This can be elegantly realized using the summation point where the main and supplementary (additional) setpoints are added in the setpoint channel. In this case, both quantities are simultaneously read-in through two separate or one setpoint source and summed in the setpoint channel. Depending on external circumstances, the supplementary setpoint can be dynamically disconnected or switched-in to the summation point (see figure below). This functionality can be used to advantage, especially for discontinuous processes.

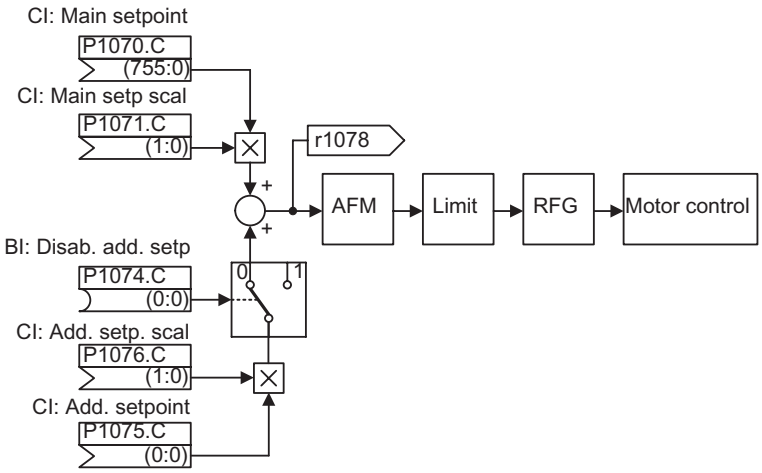

Figure 6-23 Summation

The inverter has the following possibilities to select the setpoint source:

1. P1000 – selecting the frequency setpoint source
2. BICO parameterization
   - P1070 CI: Main setpoint
   - P1075 CI: Additional setpoint

Further, the main setpoint as well as the supplementary (additional) setpoint can be scaled independently of one another. In this case, for example, a user can simply implement an override function using the appropriate parameterization.

A scan sequence is generally associated with a forwards and a backwards motion. When selecting the reversing functionality, after reaching the end position, a direction of rotation reversal can be initiated in the setpoint channel (see figure below).

On the other hand, if a direction of rotation reversal or a negative frequency setpoint is to be prevented from being entered using the setpoint channel, then this can be inhibited using BICO parameter P1110.

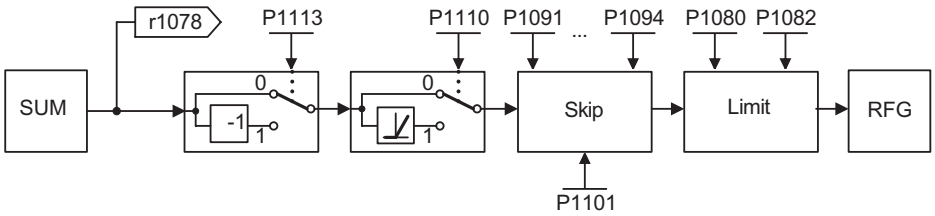

Figure 6-24 Modifying the frequency setpoint

Motors can have one or several resonance points in the range from 0 Hz up to the reference frequency. These resonance points result in oscillations which, under worst case conditions, can damage the motor load. Using skip frequencies, the inverter allows these resonant frequencies to be passed through as quickly as possible. This means that the skip frequencies increase the availability of the motor load over the long term.

Input values

Table 6-23 Main function parameters

Parameter	Description	Setting
P1070 = …	**Main setpoint** possible source: 755 (Analog input 0) / 1024 (FF) / 1050 (MOP)	
P1071 = …	**Main setpoint scaling** possible source: 755 (Analog input 0) / 1024 (FF) / 1050 (MOP)	
P1074 = …	**Disable additional setpoint** possible sources: 722.x (digital inputs)	
P1075 = …	**Additional setpoint** possible source: 755 (Analog input 0) / 1024 (FF) / 1050 (MOP)	
P1076 = …	**Additional setpoint scaling** possible source: 755 (Analog input 0) / 1024 (FF) / 1050 (MOP)	
P1110 = …	**Inhibit neg. freq. setpoint** 0: Disabled (Default) 1: Enabled	
P1113 = …	**Reverse** possible sources: 722.x (digital inputs)	

Table 6-24 Additional commissioning parameters

Parameter	Description	Setting
P1080 = …	**Min. frequency** 0 ... 650 Hz, default 0 Hz	
P1082 = …	**Max. frequency** 0 ... 650 Hz, default 50 Hz	
P1091 = …	**Skip frequency** 0 ... 650 Hz, default 0 Hz	
P1092 = …	**Skip frequency 2** 0 ... 650 Hz, default 0 Hz	
P1093 = …	**Skip frequency 3** 0 ... 650 Hz, default 0 Hz	
P1094 = …	**Skip frequency 4** 0 ... 650 Hz, default 0 Hz	
P1101 = …	**Skip frequency bandwidth** 0 ... 10 Hz, default 2 Hz	

Output value

Parameter	Description
r1078	**Total frequency setpoint**
r1079	**Selected frequency setpoint**
r1084	**Resultant max. frequency**
r1114	**Freq. Setp. After dir. Ctrl.**

6.9.2 Ramp-function generator

Data

Parameter range:	P1120, P1121
	r1119, r1170
	P1130 … P1142
Warnings:	-
Faults:	-
Function chart number:	FP5000, FP5300

Description

The ramp-function generator (RFG) is used to limit the acceleration when the setpoint changes according to a step function. This therefore helps to reduce the stressing on the mechanical system of the machine. An acceleration ramp and a braking ramp can be set independently of one another using the ramp-up time P1120 and the ramp-down time P1121. This allows a controlled transition when the setpoint is changed (see figure below).

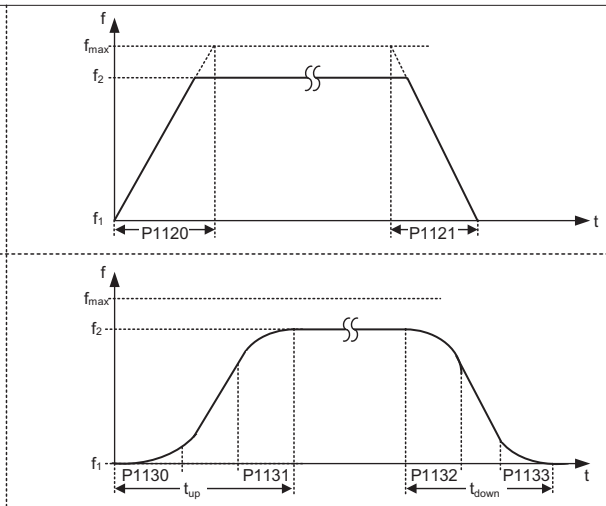

Dependency	Ramp-up time	Ramp-down time
always for $\lvert f_2 - f_1 \rvert = P1082$	$t_{up} = \frac{P1130 + P1131}{2} + P1120$	$t_{down} = \frac{P1132 + P1133}{2} + P1121$
for $\frac{P1130 + P1131}{2} > P1120$ and $\frac{p1132 + P1133}{2} > P1121$	$t_{up} = (\frac{P1130 + P1131}{2} + P1120) \cdot \sqrt{\frac{\lvert f_2 - f_1 \rvert}{P1082}}$	$t_{down} = (\frac{P1132 + P1133}{2} + P1121) \cdot \sqrt{\frac{\lvert f_2 - f_1 \rvert}{P1082}}$
for $\frac{P1130 + P1131}{2} \leq P1120$ and $\frac{P1132 + P1133}{2} \leq P1121$	$t_{up} = \frac{P1130 + P1131}{2} + P1120 \cdot \frac{\lvert f_2 - f_1 \rvert}{P1082}$	$t_{down} = \frac{P1132 + P1133}{2} + P1121 \cdot \frac{\lvert f_2 - f_1 \rvert}{P1082}$

Figure 6-25 Ramp-function generator

In order to avoid torque surges at the transitions (constant velocity phase ←→ accelerating/braking phase), additional rounding-off times P1130 … P1133 can be programmed. This is especially important for applications (e.g. transporting or pumping liquids or for cranes) which require an especially "soft", jerk-free acceleration and braking.

If the OFF1 command is initiated while the motor is accelerating, then rounding-off can be activated or deactivated using parameter P1134 (see figure below). These rounding-off times are defined using parameters P1132 and P1133.

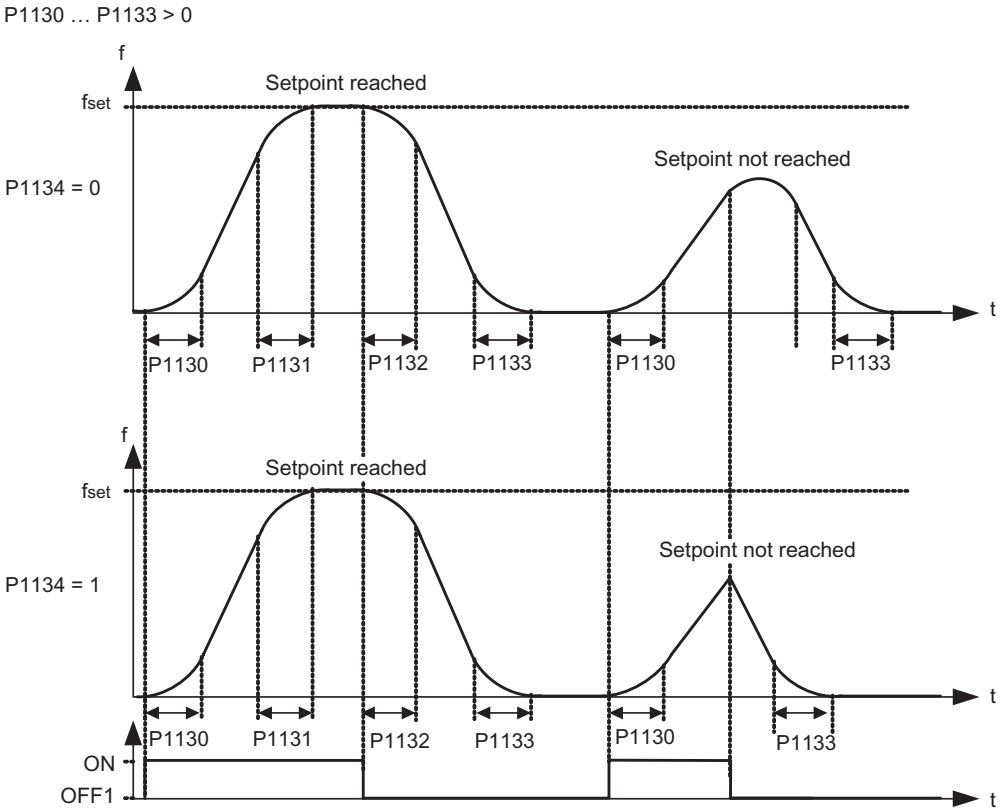

Figure 6-26 Rounding-off after an OFF1 command

In addition to the rounding-off times, the ramp-function generator can be influenced using external signals. The ramp-function generator provides the following functionality using BICO parameters P1140, P1141 and P1142 (see table below).

The ramp-function generator itself is enabled after the pulses have been enabled (inverter enable) and after the excitation time has expired (P0346). After limiting to the maximum speeds for the positive and negative directions of rotation (P1082 or 0 Hz for the direction of rotation inhibit) the setpoint speed for the control is obtained (r1170).

While the V/f characteristic operates up to 650 Hz, the control (vector mode) is limited to a maximum frequency of 200 Hz (r1084).

Table 6-25 BICO parameters for ramp-function generator

Parameter		Description
P1140	BI: RFG enable	The ramp-function generator **output** is set to 0 if the binary signal = 0.
P1141	BI: RFG start	The ramp-function generator **output** keeps its actual value if the binary signal = 0.
P1142	BI: RFG enable setpoint	If the binary signal = 0, then the ramp-function generator **input** is set to 0 and the output is reduced to 0 through the ramp-function generator ramp.

Note

The maximum frequency of the setpoint channel is set using parameter P1080.

In V/f mode the maximum frequency is 650 Hz.

In vector mode the maximum frequency is 200 Hz (r1084).

Input values

Table 6-26 Main function parameters

Parameter	Description	Setting
P1120 = …	**Ramp-up time** 0 ... 650 s, default 10 s	
P1121 = …	**Ramp-down time** 0 ... 650 s, default 10 s	
P1130 = …	**Ramp-up initial rounding time** 0 ... 40 s, default 0 s	
P1131 = …	**Ramp-up final rounding time** 0 ... 40 s, default 0 s	
P1132 = …	**Ramp-down initial rounding time** 0 ... 40 s, default 0 s	
P1133 = …	**Ramp-down final rounding time** 0 ... 40 s, default 0 s	
P1113 = …	**Reverse** possible sources: 722.x (digital inputs)	

Table 6-27 Additional commissioning parameters

Parameter	Description	Setting
P1134 = …	**Rounding type** 0: Continuous smoothing (default) 1: Discontinuous smoothing	
P1135 = …	**OFF3 ramp-down time** 0 ... 650 s, default 5 s	
P1140 = …	**RFG enable** possible sources: 722.x (digital inputs) / 2032.4 (option port) / r2090.4 (serial interface)	
P1141 = …	**RFG start** possible sources: 722.x (digital inputs) / 2032.5 (option port) / r2090.5 (serial interface)	
P1142 = …	**RFG enable setpoint** possible sources: 722.x (digital inputs) / 2032.6 (option port) / r2090.6 (serial interface)	

Output value

Parameter	Description
r1119	**Freq. Setpoint before RFG**
r1170	**Frequency setpoint after RFG**

6.9.3 OFF/Braking Functions

Data

Parameter range:	P1121, P1135, P2167, P2168 P0840 … P0849 r0052 bit 02
Warnings:	-
Faults:	-
Function chart number:	-

Description

Both the inverter and the user have to respond to a wide range of situations and stop the inverter if needed. Thus operating requirements as well as inverter protective functions (e.g. electrical or thermal overload), or rather man-machine protective functions, have to be taken into account. Due to the different OFF/braking functions (OFF1, OFF2, OFF3) the inverter can flexibly respond to the mentioned requirements.

OFF1

The OFF1 command is strongly coupled to the ON command. When the ON command is withdrawn, then OFF1 is directly activated. The motor is braked by OFF1 with the ramp-down time P1121. In case the output frequency falls below the parameter value P2167 and the time in P2168 has expired, then the inverter pulses are cancelled.

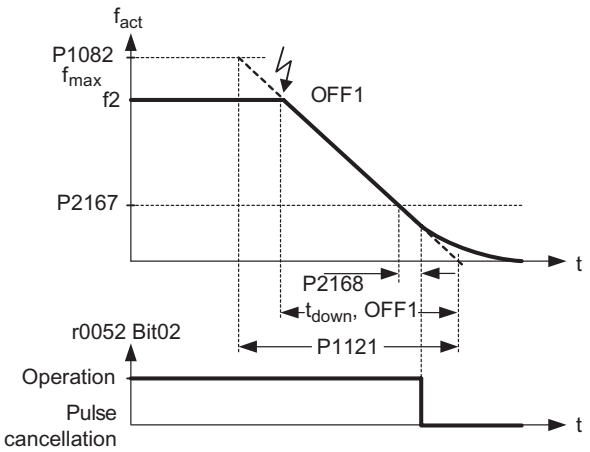

$$t_{down}, \text{OFF1} = \text{P1121} \cdot \frac{|f2|}{\text{P1082}}$$

Figure 6-27 OFF1 brake function

Note

You can configure the OFF1 command via the function "positioning ramp down". In this case, OFF1 generates a continuous braking ramp depending on the actual load speed and velocity.

OFF1 can be entered using a wide range of command sources via BICO parameter P0840 (BI: ON/OFF1) and P0842 (BI: ON/OFF1 with reversing).

BICO parameter P0840 is pre-assigned by defining the command source using P0700.

The ON and the following OFF1 command must have the same source.

If the ON/OFF1 command is set for more than one digital input, then only the digital input that was last set, is valid, e.g. DI3 is active.

OFF1 is low active.

When simultaneously selecting the various OFF commands, the following priority applies:

- OFF2 (highest priority)
- OFF3
- OFF1.

OFF1 can be combined with DC current braking or compound braking.

When the motor holding brake MHB (P1215) is activated, for an OFF1, P2167 and P2168 are not taken into account.

OFF2

The inverter pulses are immediately cancelled by the OFF2 command. Thus the motor coasts down and it is not possible to brake in a controlled fashion.

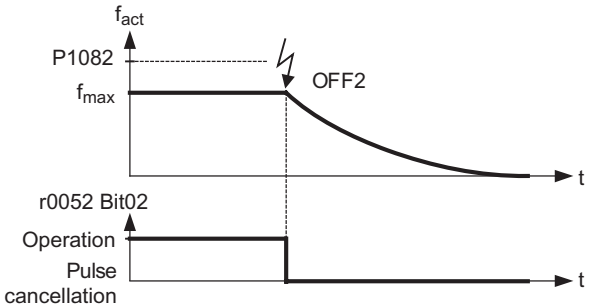

Figure 6-28 OFF2 brake function

Note

The OFF2 command can have one or several sources. The command sources are defined using BICO parameters P0844 (BI: 1. OFF2) and P0845 (BI: 2. OFF2).

As a result of the pre-assignment (default setting), the OFF2 command is set to the OP. This source is still available even if another command source is defined (e.g. terminal as command source → P0700 = 2 and OFF2 is selected using DI2 → P0702 = 3).

OFF2 is low-active.

When simultaneously selecting the various OFF commands, the following priority applies:

- OFF2 (highest priority)
- OFF3
- OFF1.

OFF3

The braking characteristics of OFF3 are identical with those of OFF1 with the exception of the autonomous OFF3 ramp-down time P1135. If the output frequency falls below parameter value P2167 and if the time in P2168 has expired, then the inverter pulses are cancelled as for the OFF1 command.

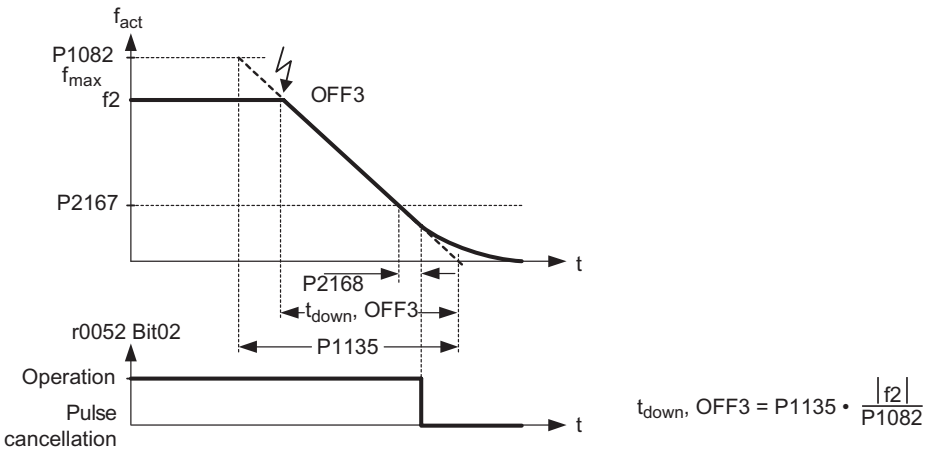

Figure 6-29 OFF3 brake function

Note

OFF3 can be entered using a wide range of command sources via BICO parameters P0848 (BI: 1. OFF3) and P0849 (BI: 2. OFF3).

OFF3 is low active.

When simultaneously selecting the various OFF commands, the following priority applies:

- OFF2 (highest priority)
- OFF3
- OFF1.

Input values

Table 6-28 Main function parameters

Parameter	Description	Setting
P0840 = …	**ON/OFF1** possible source: 722.x (digital input) / 2032.0 (option port) / 2090.0 (serial interface)	
P0842 = …	**ON reverse/OFF1** possible source: 722.x (digital input)	
P0844 = …	**1. OFF2** possible source: 722.x (digital input) / 2032.1 (option port) / 2090.1 (serial interface)	
P0845 = …	**2. OFF2** possible source: 722.x (digital input) / 2032.1 (option port) / 2090.1 (serial interface)	
P0848 = …	**1. OFF3** possible source: 722.x (digital input) / 2032.2 (option port) / 2090.2 (serial interface)	
P0849 = …	**2. OFF3** possible source: 722.x (digital input) / 2032.2 (option port) / 2090.2 (serial interface)	
P1121 = …	**Ramp-down time** 0 ... 650 s, default 10 s	
P1135 = …	**OFF3 ramp-down time** 0 ... 650 s, default 5 s	
P2167 = …	**Switch-off frequency f_off** 0 ... 10 Hz, default 1 Hz: Defines the threshold of the monitoring function |f_act| > P2167	
P2168 = …	**Delay time T_off** 0 ... 10000 ms, default 10 ms: Defines time inverter operating below switch-off freq. (P2167) before switch off occurs.	

Output value

Parameter	Description
r0052.2	**Drive running**

6.9.4 Manual and Automatic Operation

Data

Parameter range:	P0700, P1000 P0810, P0811
Warnings:	-
Faults:	-
Function chart number:	-

Description

It is necessary to change-over from the automatic mode into the manual mode to load and unload production machines and to feed new materials (e.g. batch processing). The machine operator carries-out the preparatory activities for subsequent automatic operation in the manual mode. In the manual mode, the machine operator locally controls the machine (enters the ON/OFF command as well as also the setpoint). A changeover is only made into the automatic mode after the set-up has been completed. In the automatic mode, the control (open-loop) of the machines and production processes are handled by a higher-level control system (e.g. PLC). This operation is maintained until it is necessary to again load and unload the machine or feed new material into the machine or production process.

Indexed parameters P0700 or P1000 and BICO parameters P0810 and P0811 are used to changeover (toggle between) the manual/automatic modes. The command source is defined using P0700 and the setpoint source is defined using P1000, whereby index 0 (P0700[0] and P1000[0]) defines the automatic mode and index 1 (P0700[1] and P1000[1]) the manual mode. BICO parameters P0810 and P0811 are used to changeover (toggle between) the automatic and manual modes. These BICO parameters can be controlled from any control source. In so doing, in addition to P0700 and P1000, also all of the other CDS parameters are changed over (manual/automatic changeover is generalized as a CDS changeover).

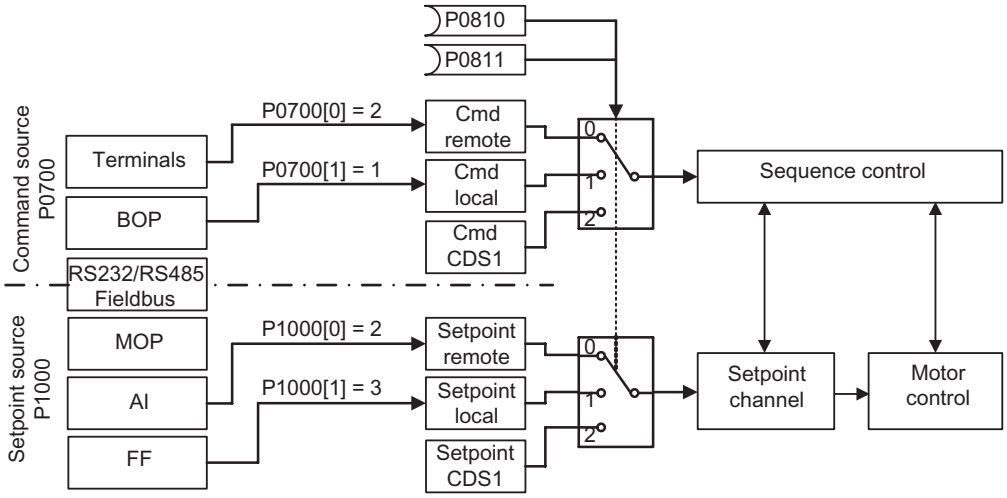

Figure 6-30 Changing-over using the BICO parameters P0810 and P0811

Input values

Table 6-29 Main function parameters

Parameter	Description	Setting
P0700 = …	**Selection of command source** 0: Factor default setting 1: BOP 2: Terminal 4: USS on RS232 6: Fieldbus (default, depending on the type of Frequency inverter)	
P0810 = …	**CDS bit 0 (Hand/Auto)** possible source (0 = default): 722.x: Digital inputs 2032.15: USS on RS232 2036.15: USS on RS485 2090.15: Fieldbus	
P0811 = …	**CDS bit 1** possible source (0 = default): 722.x: Digital inputs 2033.15: USS on RS232 2037.15: USS on RS485 2091.15: Fieldbus	
P1000 = …	**Selection of frequency setpoint** 0: No Main setpoint 1: MOP setpoint 2: Analog setpoint (default, depending on the type of Frequency inverter) 3: Fixed frequency 4: USS on RS232 6: Fieldbus (default, depending on the type of Frequency inverter) 7: Analog setpoint 2 10: No main setpoint + MOP setpoint ... 77: Analog setpoint 2 + Analog setpoint 2	

6.9.5 FFBs and Fast FFBs

Data

Parameter range:	P2800 … P2890
Warnings:	-
Faults:	-
Function chart number:	FP4800 … FP4830
Cycle time:	128 ms (FFB) 8 ms (Fast FFB)

Description

For many applications, interlocking logic is required in order to control (open-loop) the inverter. This interlocking logic couples several states (e.g. access control, plant/system state) to form a control signal (e.g. ON command). Previously this was implemented using either a PLC or relays. This represented additional costs for the plant or system. In addition to logic operations, increasingly, arithmetic operations and storage elements are required in inverters which generate a new unit from several physical quantities. This simplified PLC functionality is integrated in the inverter using the following following components:

- Freely programmable function blocks (FFB)
- Fast freely programmable function blocks (Fast FFB)

Differences of FFB and Fast FFB

FFB and Fast FFB work like two independent functions, but the same block cannot be used in both functions in the same time.

The function FFB is called within the 128 ms time slice (cycle time). In the function FFB all of the blocks can be used. The following blocks can be used only within the 128 ms time slice:

- Timers-blocks
- ADD-blocks
- SUB-blocks
- MUL-blocks
- DIV-blocks
- CMP-blocks

The function Fast FFB is called within the 8 ms time slice. In Fast FFB only the following blocks are available:

- AND -blocks
- OR-blocks
- XOR-blocks
- NOT-blocks
- Flip-Flops

Enabling

The FFB and Fast FFB are enabled in two steps:

1. General enable P2800:
   The function FFB is enabled using parameter P2800 (P2800 =1).

   The function Fast FFB is enabled using parameter P2803 (P2803 = 1)
2. Specific enable P2801, P2802:
   - FFB

     Using parameter P2801 or P2802, the particular function block is enabled (P2801[x] or P2802[x] = 1...3) and the sequence in which they are executed is also defined.
   - Fast FFB

     Using parameter P2801 the particular function block is enabled (P2801[x] = 4...6)

Priority

Additionally, adapt to the application, the chronological sequence in which the blocks are executed, can also be controlled. This is especially important so that the blocks executed in the sequence which is technologically correct. Parameter 2801 and P2802 are used for the individual enable function as well as to define the priority in which the blocks are executed.

The following priority levels can be assigned:

- 0 = Inactive
- 1 = Level 1 (FFB)
- 2 = Level 2 (FFB)
- 3 = Level 3 (FFB)
- 4 = Level 4 (Fast FFB)
- 5 = Level 5 (Fast FFB)
- 6 = Level 6 (Fast FFB)

The figure below indicates that the priority decreases from the top towards the bottom (priority 1 → level) or from the right to left (priority 2 → line).

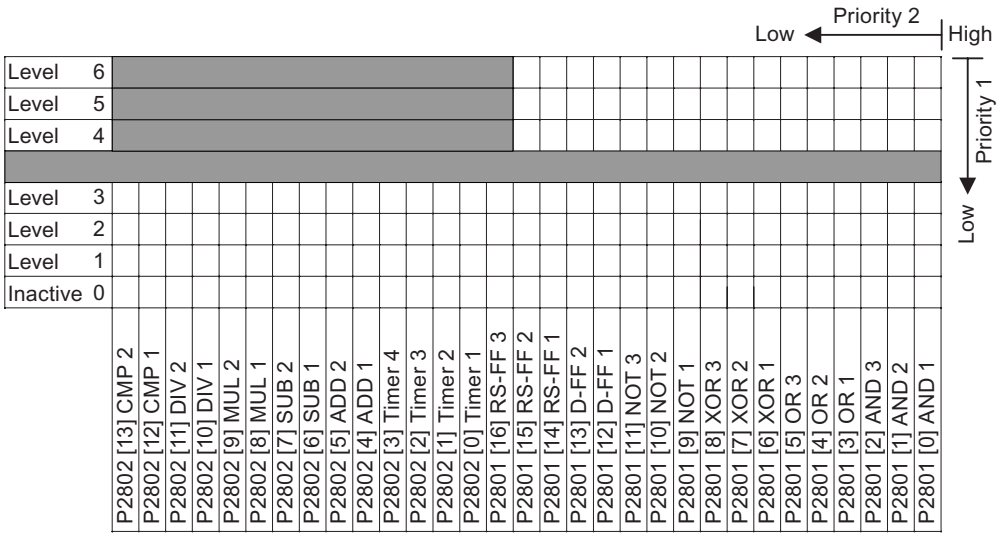

Figure 6-31 Free function block priorities

Input values

Table 6-30 Main function parameters

Parameter	Description	Setting
P2800 = …	**Enable FFBs** 0: Disabled (default) 1: Enabled	
P2801 = …	**Activate FFBs/Fast FFBs** 0: Not active (default) 1: Level 1 2: Level 2 3: Level 3 4: Level 4 (Fast FFB) 5: Level 5 (Fast FFB) 6: Level 6 (Fast FFB)	
P2802 = …	**Activate FFBs** 0: Not active (default) 1: Level 1 2: Level 2 3: Level 3	
P2803 = …	**Enable Fast FFBs** 0: Disable (default) 1: Enable	
P2810 = …	**AND 1** Index: [0] = BI 0 , [1] = BI 1 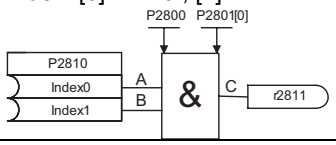 A B C 0 0 0 0 1 0 1 0 0 1 1 1	
P2812 = …	**AND 2** Index: [0] = BI 0 , [1] = BI 1	

Parameter	Description	Setting
P2814 = …	**AND 3** Index: [0] = BI 0 , [1] = BI 1	
P2816 = …	**OR 1** Index: [0] = BI 0 , [1] = BI 1 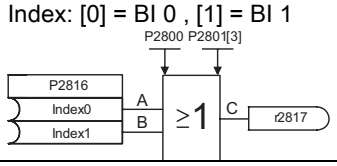 A B C 0 0 0 0 1 1 1 0 1 1 1 1	
P2818 = …	**OR 2** Index: [0] = BI 0 , [1] = BI 1	
P2820 = …	**OR 3** Index: [0] = BI 0 , [1] = BI 1	
P2822 = …	**XOR 1** Index: [0] = BI 0 , [1] = BI 1 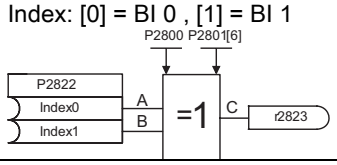 A B C 0 0 0 0 1 1 1 0 1 1 1 0	
P2824 = …	**XOR 2** Index: [0] = BI 0 , [1] = BI 1	
P2826 = …	**XOR 3** Index: [0] = BI 0 , [1] = BI 1	
P2828 = …	**NOT 1** defines input of NOT 1 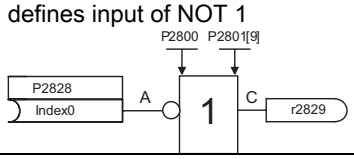 A C 0 1 1 0	
P2830 = …	**NOT 2** defines input of NOT 2	
P2832 = …	**NOT 3** defines input of NOT 2	

Parameter	Description	Setting
P2834 = …	**D-FlipFlop 1** Index: [0] = BI: set, [1] = BI: D input, [2] = BI: store pulse, [3] = BI: reset 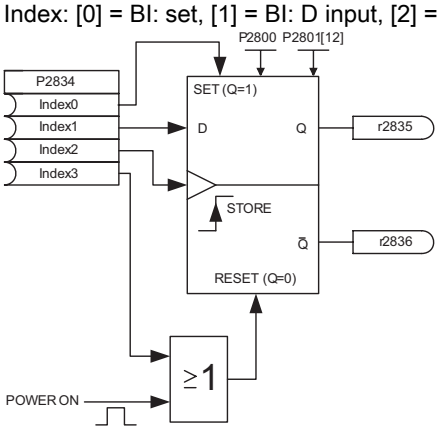 SET | RESET | D | STORE | Q | Q̄ 1 | 0 | x | x | 1 | 0 0 | 1 | x | x | 0 | 1 1 | 1 | x | x | Q_{n-1} | $\overline{Q}_{n-1}$ 0 | 0 | 1 | ↑ | 1 | 0 0 | 0 | 0 | ↑ | 0 | 1 POWER-ON | 0 | 1	
P2837 = …	**D-FlipFlop 2** Index: [0] = BI: set, [1] = BI: D input, [2] = BI: store pulse, [3] = BI: reset	
P2840 = …	**RS-FlipFlop 1** Index: [0] = BI: set, [1] = BI: reset 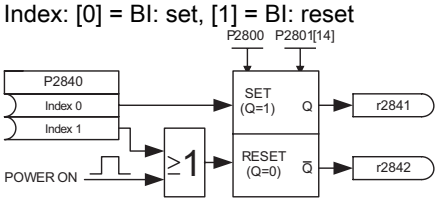 SET | RESET | Q | Q̄ 0 | 0 | Q_{n-1} | $\overline{Q}_{n-1}$ 0 | 1 | 0 | 1 1 | 0 | 1 | 0 1 | 1 | Q_{n-1} | $\overline{Q}_{n-1}$ POWER-ON | 0 | 1	
P2843 = …	**RS-FlipFlop 2** Index: [0] = BI: set, [1] = BI: reset	
P2846 = …	**RS-FlipFlop 3** Index: [0] = BI: set, [1] = BI: reset	
P2849 = …	**Timer 1** defines input signal of timer 1 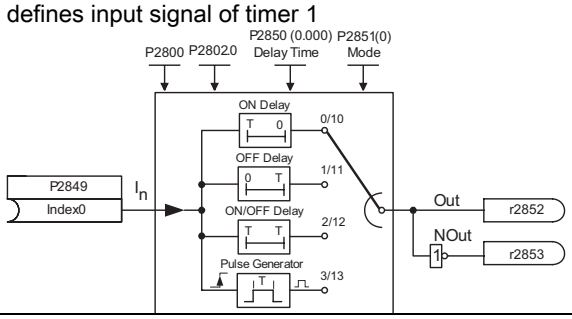 	
P2850 = …	**Delay time of timer 1** defines delay time of timer 1	

Parameter	Description	Setting
P2851 = …	**Mode timer 1** 0: ON delay (sec) 1: OFF delay (sec) 2: ON/OFF delay (sec) 3: pulse generator (sec) 10: ON delay (min) 11: OFF delay (min) 12: ON/OFF delay (min) 13: pulse generator (min)	
P2854 = …	**Timer 2** defines input signal of timer 2	
P2855 = …	**Delay time of timer 2** defines delay time of timer 2	
P2856 = …	**Mode timer 2** see P2851 for modes	
P2859 = …	**Timer 3** defines input signal of timer 3	
P2860 = …	**Delay time of timer 3** defines delay time of timer 3	
P2861 = …	**Mode timer 3** see P2851 for modes	
P2864 = …	**Timer 4** defines input signal of timer 4	
P2865 = …	**Delay time of timer 4** defines delay time of timer 4	
P2866 = …	**Mode timer 4** see P2851 for modes	
P2869 = …	**ADD 1** Index: [0] = CI 0, [1] = CI 1 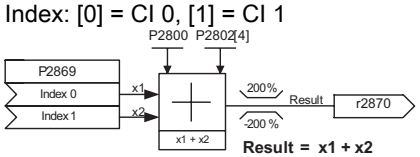 **Result = x1 + x2** If: x1 + x2 > 200% → Result = 200% x1 + x2 < -200% → Result = -200%	
P2871 = …	**ADD 2** Index: [0] = CI 0, [1] = CI 1	
P2873 = …	**SUB 1** Index: [0] = CI 0, [1] = CI 1 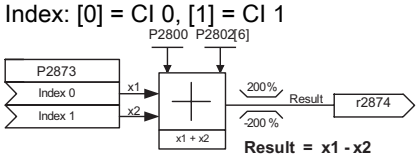 **Result = x1 - x2** If: x1 - x2 > 200% → Result = 200% x1 - x2 < -200% → Result = -200%	
P2875 = …	**SUB 2** Index: [0] = CI 0, [1] = CI 1	

Parameter	Description	Setting
P2877 = …	**MUL 1** Index: [0] = CI 0, [1] = CI 1 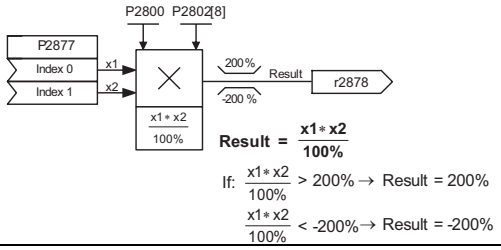 	
P2879 = …	**MUL 2** Index: [0] = CI 0, [1] = CI 1	
P2881 = …	**DIV 1** Index: [0] = CI 0, [1] = CI 1 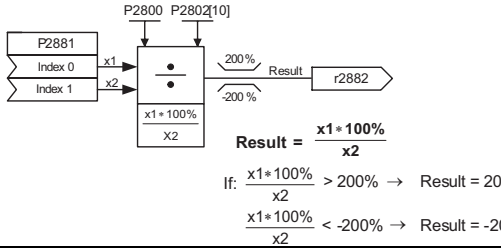 	
P2883 = …	**DIV 2** Index: [0] = CI 0, [1] = CI 1	
P2885 = …	**CMP 1** Index: [0] = CI 0, [1] = CI 1 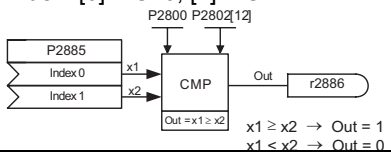 	
P2887 = …	**CMP 2** Index: [0] = CI 0, [1] = CI 1	
P2889 = …	**Fixed setpoint 1 in [%]** -200 ... 200 %, default 0 % Connector Setting in % 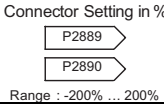 	
P2890 = …	**Fixed setpoint 2 in [%]** -200 ... 200 %, default 0 %	

Output value

r2811	**AND 1**
r2813	**AND 2**
r2815	**AND 3**
r2817	**OR 1**
r2819	**OR 2**

r2821	OR 3
r2823	XOR 1
r2825	XOR 2
r2827	XOR 3
r2829	NOT 1
r2831	NOT 2
r2833	NOT 3
r2835	Q D-FF1
r2836	NOT-Q D-FF1
r2838	Q D-FF2
r2839	NOT-Q D-FF2
r2841	Q RS-FF1
r2842	NOT-Q RS-FF1
r2844	Q RS-FF2
r2845	NOT-Q RS-FF2
r2847	Q RS-FF3
r2848	NOT-Q RS-FF3
r2852	Timer 1
r2853	Nout timer 1
r2857	Timer 2
r2858	Nout timer 2
r2862	Timer 3
r2863	Nout timer 3
r2867	Timer 4
r2868	Nout timer 4
r2870	ADD 1
r2872	ADD 2
r2874	SUB 1
r2876	SUB 2
r2878	MUL 1
r2880	MUL 2
r2882	DIV 1
r2884	DIV 2
r2886	CMP 1
r2888	CMP 2

Example 1

Enabling the FFBs:	P2800 = 1
Enabling individual FFB including assigning a priority:	
P2801[0] = 1	AND 1
P2801[1] = 2	AND 2
P2801[2] = 3	AND 3
P2802[12] = 2	CMP 1
P2802[13] = 3	CMP 2
The FFBs are calculated in the following sequence:	AND 3 → CMP 2 → AND 2 → CMP 1 → AND 1

Example 2

Enabling the FFBs:	P2800 = 1
Enabling individual FFB including assigning a priority:	
P2801[3] = 2	OR 1
P2801[4] = 2	OR 2
P2802[3] = 3	Timer 4
P2801[0] = 1	AND 1
The FFBs are calculated in the following sequence:	Timer 4 → OR 1 → OR 2 → AND 1

Example 3 Fast FFB

Enabling the Fast FFBs:	P2803 = 1
Enabling individual Fast FFB including assigning a priority:	
P2801[3] = 6	OR 1
P2801[4] = 5	OR 2
P2801[0] = 4	AND 1
The Fast FFBs are calculated in the following sequence:	OR 1 → OR 2 → AND 1

The function blocks are interconnected using BICO technology. In so doing, the function blocks can be connected with one another as well as to other signals and quantities as long as these signals or quantities have the appropriate attribute (BO, BI, CO and CI).

6.9.6 Wobble Generator

Data

Parameter range:	P2940, P2945 - P2949 r2955
Warnings:	-
Faults:	-
Function chart number:	FP5110
Cycle time:	2 ms

Description

The wobble generator executes predefined periodical disruptions superimposed on the main setpoint for technological usage in the fibre industry. Both, the positive and the negative pulse jump can be parameterized, and the wobble function can be activated via P2940. The wobble signal is added to the main setpoint as an additional setpoint. The wobble function is only active, when the setpoint is reached. While ramping up or down, the wobble signal will not be added. The wobble signal is also limited by the maximum frequency.

Function

The wobble generator can be started and parameterized via the parameters shown below. It is independent of the setpoint direction, thus only the absolute value of the setpoint is relevant. During the change of the setpoint the wobble function is inactive. The frequency values of the wobble functions are limited by the maximal frequency (P1082). If the wobble function is deactivated, the wobble signal is set to 0 immediately.

Note

The wobble signal is blocked during

- DC braking
- flying restart
- vdc max controller active

I-max controller active

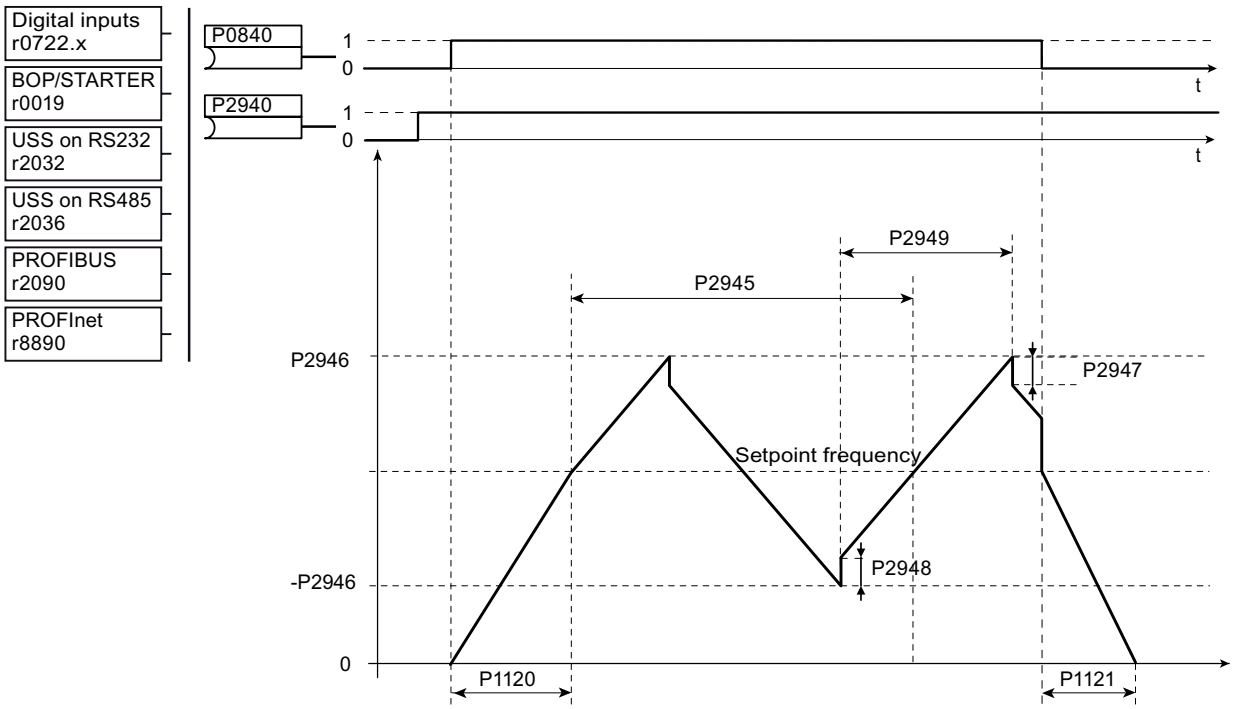

Figure 6-32 Wobble function disturb signal

Input values

Table 6-31 Main function parameter

Parameter	Description	Setting
P2940 = …	**Release Wobble function** Defines the source to release the wobble function, e.g. DI or any BO parameter (0 = default)	

Table 6-32 Additional commissioning parameters

Parameter	Description	Setting
P2945 = …	**Signal frequency** 0.1 ... 120 RPM, default 60 RPM: Sets the frequency of the wobble-signal	
P2946 = …	**Signal amplitude** 0 ... 0.2, default 0: Sets the value for the amplitude of the wobble-signal	
P2947 = …	**Wobble negative pulse jump** 0 ... 1, default 0: Sets the value for negative pulse jump at the end of the positive signal period	
P2948 = …	**Wobble positive pulse jump** 0 ... 1, default 0: Sets the value for positive pulse jump at the end of the negative signal period	
P2949 = …	**Signal pulse width** 0 ... 100 %, default 50 %: Sets the value for the pulse width of the wobble-signal	

Output value

r2955	**Wobble function: signal output**

6.10 Control Functions

6.10.1 Open-loop and closed-loop control overview

Overview

There are several open-loop and closed-loop techniques for closed-loop speed and torque control for inverters with induction and synchronous motors. These techniques can be roughly classified as follows:

- V/f characteristic control (known as: V/f control)
- Field-orientated closed-loop control technique (known as: Vector control)

The field-orientated control technique – Vector control – can be further sub-divided into two groups:

- Vector control without speed feedback (sensorless Vector control (SLVC))
- Vector control with speed feedback (Vector control (VC))

These techniques differ from one another both regarding the control ability and in the complexity of the technique, which in turn are obtained as a result of the requirements associated with a particular application. For basic applications (e.g. pumps and fans), to a large extent, V/f control is used. Vector control is mainly used for sophisticated applications (e.g. winders), where a good control and behavior in noisy conditions are required regarding the speed and torque. If these requirements are also present in the range from 0 Hz to approx. 1 Hz, then the speed/torque accuracy without encoder is not sufficient. In this case, Vector control with speed feedback must be used.

6.10.2 V/f Control

Data

Parameter range:	P1300
	P1310 … P1350
Warnings:	-
Faults:	-
Function chart number:	FP6100

Description

The V/f characteristic represents the simplest control technique. In this case the stator voltage of the induction motor or synchronous motor is adjusted proportionally to the stator frequency. This technique has proven itself for a wide range of "basic" applications, such as

- Pumps, fans
- Belt motors

and similar processes.

The goal of V/f control is to keep the flux Φ constant in the motor. In this case, this is proportional to the magnetizing current I_μ and the ratio between voltage V and frequency f.

$\Phi \sim I\mu \sim V/f$

The torque M, developed by induction motors, is proportional to the product (precisely the Vectorial product Φ x I) of flux and current.

$M \sim \Phi * I$

In order to generate the maximum possible torque from a given current, the flux must be held constant at its nominal value. That means, the value of the magnetizing current must be constant even if the stator frequency changes. This can be achieved approximately if the stator voltage U is changed proportional to the stator frequency. The V/f characteristic control is derived from these basic principles.

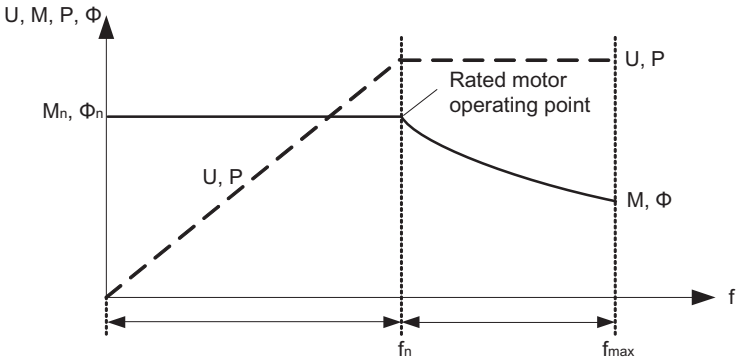

Figure 6-33 Operating ranges and characteristics of an induction motor when fed from an inverter

There are several versions of the V/f characteristic as shown in the table below.

Table 6-33 V/f characteristics (parameter P1300)

Parameter value	Significance	Use/property	
0	Linear characteristic	Standard case	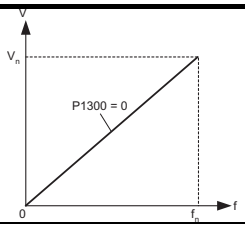
1	FCC	Can give a more efficient and better load response than other V/f modes because the FCC characteristic automatically compensates the voltage losses of the stator resistance for static (steady-state) or dynamic loads (flux current control FCC). This is used especially for small motors which have a relatively high stator resistance.	
2	Square-law characteristic	This is a characteristic which takes into consideration the torque characteristic of the motor load (e.g. fan/pump): a) Square-law characteristic (f^2 characteristic) b) Energy saving as the lower voltage also results in lower currents and losses.	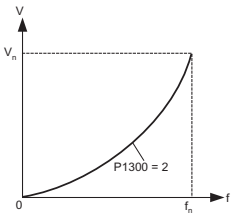
3	Programmable characteristic	Characteristic which takes into consideration the torque characteristic of the motor/driven load (e.g. synchronous motor).	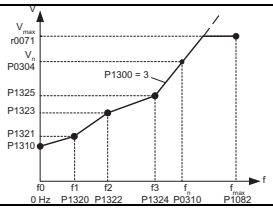
5	Application adaptation	This is a characteristic which takes into consideration the special technological issues of an application (e.g. textile applications), a) Where the current limiting (Imax controller) only influences the output voltage and not the output frequency, and b) By inhibiting the slip compensation	
6	Application adaptation with FCC	This is a characteristic which takes into consideration the special technological issues of an application (e.g. textile applications), a) Where the current limiting (Imax controller) only influences the output voltage and not the output frequency, and b) By inhibiting the slip compensation	
19	Independent voltage input	The user can enter the output voltage of the inverter, independently of the frequency, using a BICO parameter P1330 via the interfaces (e.g. analog input → P1330 = 755).	

Input values

Table 6-34 Main function parameters

Parameter	Description	Setting
P1300 = …	**Control mode** 0: V/f with linear characteristic (default) 1: V/f with FCC 2: V/f with quadratic characteristic 3: V/f with programmable characteristic 4: reserved 5: V/f for textile applications 6: V/f with FCC for textile applications 19: V/f control with independent voltage setpoint 20: Sensorless vector control 21: Vector control with sensor 22: Sensorless vector torque-control 23: Vector torque-control with sensor	
P1335 = …	**Slip compensation** 0 ... 600 %, default 0 %	

Table 6-35 Additional commissioning parameters

Parameter	Description	Setting
P1310 = …	**Continuous boost** 0 ... 250 %, default 50 %	
P1311 = …	**Acceleration boost** 0 ... 250 %, default 0 %	
P1312 = …	**Starting boost** 0 ... 250 %, default 0 %	
P1316 = …	**Boost end frequency** 0 ... 100 Hz, default 20 Hz	
P1320 = …	**Programmable V/f freq. Coord. 1** 0 ... 650 Hz, default 0 Hz	
P1321 = …	**Programmable V/f volt. Coord. 1** 0 ... 3000 V, default 0 V	
P1322 = …	**Programmable V/f freq. Coord. 2** 0 ... 650 Hz, default 0 Hz	
P1323 = …	**Programmable V/f volt. Coord. 2** 0 ... 3000 V, default 0 V	
P1324 = …	**Programmable V/f freq. Coord. 3** 0 ... 650 Hz, default 0 Hz	
P1325 = …	**Programmable V/f volt. Coord. 3** 0 ... 3000 V, default 0 V	
P1330 = …	**Voltage setpoint**	
P1333 = …	**Start frequency for FCC** 0 ... 100 Hz, default 10 Hz	
P1334 = …	**Slip compensation activation range** 1 ... 20 Hz, default 6 Hz	

Parameter	Description	Setting
P1336 = …	**Slip limit** 0 ... 600 %, default 250 %	
P1338 = …	**Resonance damping gain V/f** 0 ... 10, default 0	
P1340 = …	**Imax controller prop. gain** 0 ... 0.499, default 0	
P1341 = …	**Imax controller integral time** 0 ... 50 s, default 0.3 s	
P1345 = …	**Imax voltage ctrl. Prop. gain** 0 ... 5.499, default 0.250	
P1346 = …	**Imax voltage ctrl. Integral time** 0 ... 50 s, default 0.3 s	
P1350 = …	**Voltage soft start** 0: OFF (default) 1: ON	

Output value

r1315	**Total boost voltage**
r1337	**V/f slip frequency**
r1343	**Imax controller freq. Output** Displays effective frequency limitation of the inverter. If I_max controller not in operation, parameter normally shows max. frequency P1082.
r1334	**Imax controller volt. Output** Displays amount by which the I_max controller is reducing the inverter output voltage.

6.10.2.1 Voltage boost

Data

Parameter range:	P1310 … P1312
	r0056 bit 05
Warnings:	-
Faults:	-
Function chart number:	FP6100

Description

For low output frequencies, the V/f characteristics only give a low output voltage. The ohmic resistances of the stator winding play a role at low frequencies, which are neglected when determining the motor flux in V/f control. This means that the output voltage can be too low in order to:

- implement the magnetization of an induction motor,
- to hold the load
- to equalize losses (ohmic losses in the winding resistances) in the system or
- to provide a breakaway/accelerating/braking torque.

The output voltage can be increased (boosted) in the inverter using the parameters as shown in the table below.

Note

Especially at low frequencies, the motor temperature is additionally increased as a result of the voltage boost (the motor overheats)!

The voltage value at 0 Hz is determined from the product of rated motor current P0305, stator resistance P0350 and the appropriate parameters P1310 … P1312.

If a wrong stator resistance is used, the current applied to the motor is not the same as specified in P1310 … P1312. This may cause overcurrent (F0001).

Using very high boost values may cause the motor to stuck at a low frequency due to the Imax controller (very high boost may cause overcurrent failure).

Table 6-36 Voltage boost

Parameter	Voltage boost	Explanation
P1310	Constant voltage boost	The voltage boost is effective over the complete frequency rage whereby the value continually decreases at high frequencies. 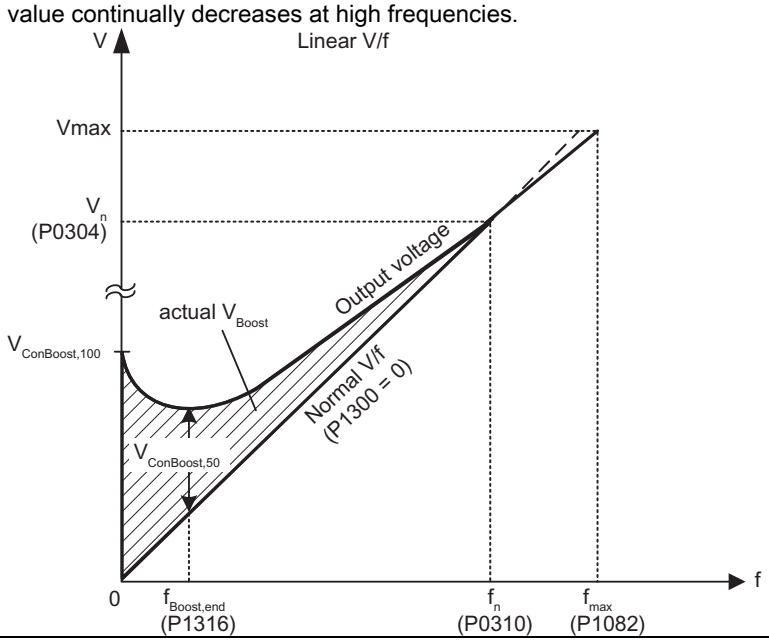
P1311	Voltage boost when accelerating or braking	The voltage boost is only effective when accelerating or braking. 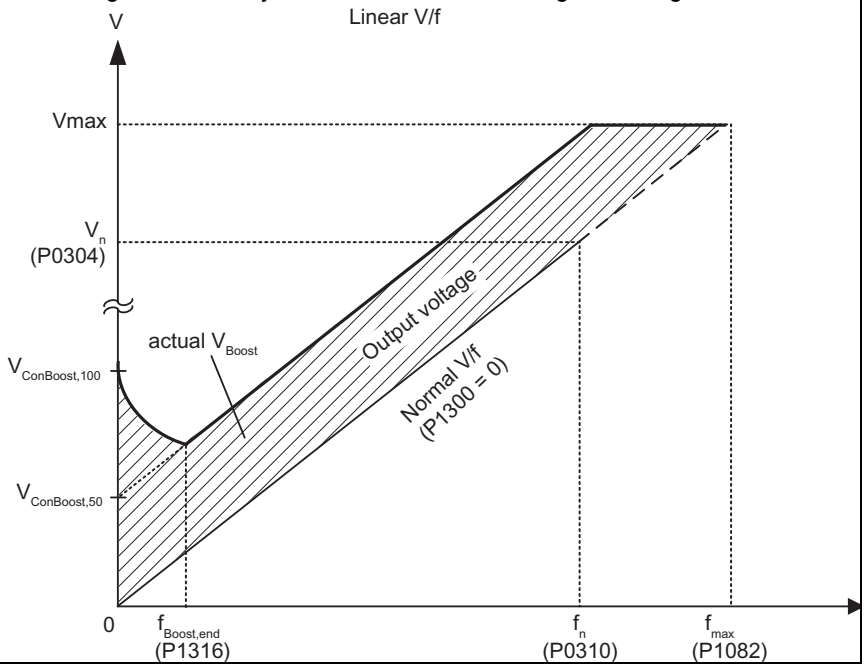

Parameter	Voltage boost	Explanation
P1312	Voltage boost when starting	The voltage boost is only effective when accelerating for the first time (standstill) 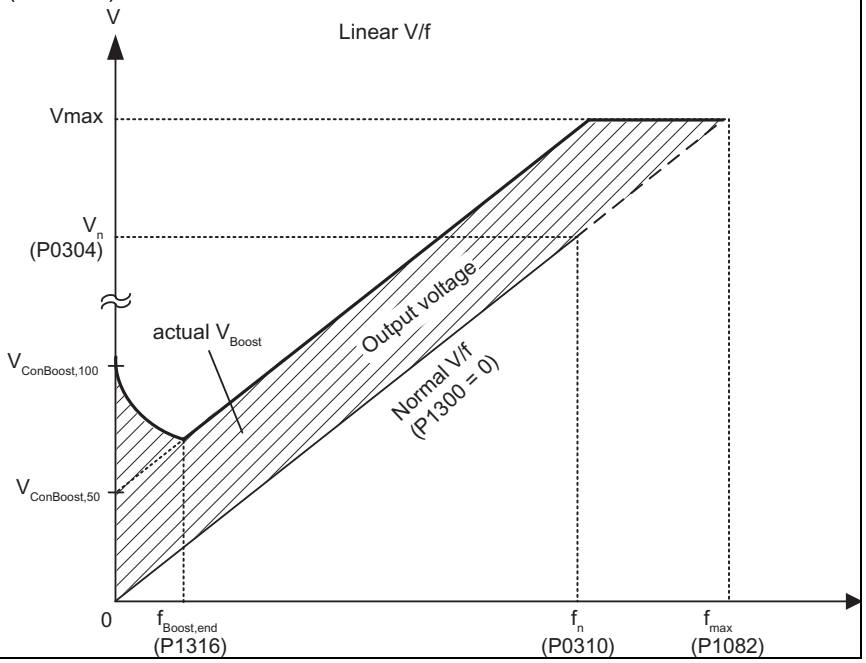

Input values

Table 6-37 Main function parameters

Parameter	Description	Setting
P1310 = …	**Continuous boost** 0 ... 250 %, default 50 %: Defines boost level relative to rated motor current (P0305)	
P1312 = …	**Starting boost** 0 ... 250 %, default 0 %: Applies a constant linear offset relative to rated motor current (P0305)	

Table 6-38 Additional commissioning parameters

Parameter	Description	Setting
P1311 = …	**Acceleration boost** 0 ... 250 %, default 0 %: Applies boost relative to rated motor current (P0305)	

Output value

Parameter	Description
r0056 bit 5	**Status of motor control - Starting boost active**

6.10.2.2 Slip compensation

Data

Parameter range:	P1335
Warnings:	-
Faults:	-
Function chart number:	FP6100

Description

In the V/f characteristic operating mode the motor frequency is always lower than the inverter output frequency by the slip frequency f_s. If the load (the load is increased from M1 to M2) is increased with a constant output frequency, then the slip increases and the motor frequency decreases (from f1 to f2). This behavior, typical for an induction motor, can be compensated using slip compensation P1335. This therefore eliminates the speed reduction, caused by the load, by boosting (increasing) the inverter output frequency (see figure below).

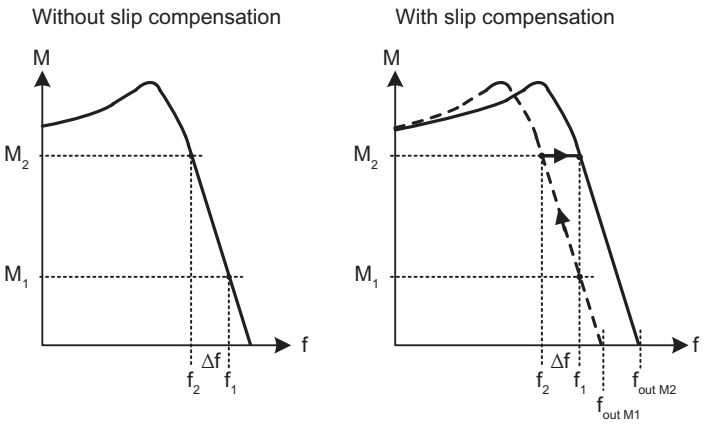

Figure 6-34 Slip compensation

Input values

Table 6-39 Main function parameters

Parameter	Description	Setting
P1335 = …	**Slip compensation** 0 ... 600 %, default 0 %	

6.10.2.3 V/f resonance damping

Data

Parameter range:	P1338
Warnings:	-
Faults:	-
Function chart number:	-

Description

Resonance effects result in an increased noise level and also can damage or destroy the mechanical system. These resonance effects can occur for:

- Geared motors
- Reluctance motors
- Large motors
  (low stator resistance → poor electrical damping)

The V/f resonance damping function is working between 6 % and 80 % of the rated motor frequency when enabled.

Contrary to the "skip frequency" function and parameters P1091 … P1094, where the resonance frequency is passed through as quickly as possible, for the V/f resonance damping (P1338), the resonance effects are dampened from a control-related perspective. The advantage of this function is that by using this active damping, operation is possible in the resonance range.

The V/f resonance damping is activated and adjusted using parameter P1338. This parameter represents a gain factor that is a measure for the damping of the resonance frequency. The following oscillogram indicates the effect of the resonance damping function using as an example a reluctance motor with gearbox. The phase output currents are displayed for an output frequency of 45 Hz.

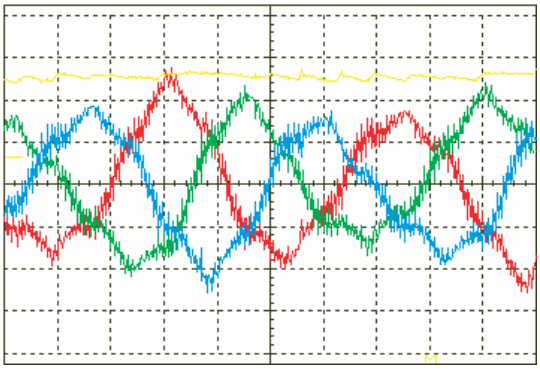

Without V/f resonance damping (P1338 = 0)

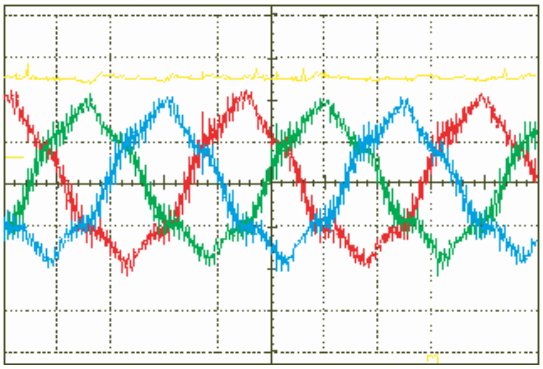

V/f resonance damping active (P1338 = 1)

Figure 6-35 Resonance damping

Input values

Table 6-40 Main function parameters

Parameter	Description	Setting
P1338 = …	**Resonance damping gain V/f** 0 ... 10, default 0: Scales di/dt of the active current	

6.10.2.4 V/f control with FCC

Data

Parameter range:	P1300, P1333
Warnings:	-
Faults:	-
Function chart number:	-

Description

The inverters have a current measurement function, which permits the output current to be precisely determined referred to the motor voltage. This measurement guarantees the output current to be sub-divided into a load component and a flux component. Using this sub-division, the motor flux can be controlled and can be appropriately adapted and optimized in-line with the prevailing conditions.

FCC operation is only activated after the FCC starting frequency P1333 has been exceeded. The FCC starting frequency P1333 is entered as a percentage to the rated motor frequency P0310. For a rated motor frequency of 50 Hz and a factory setting of P1333 = 10 %, this results in an FCC starting frequency of 5 Hz. The FCC starting frequency may not be selected too low as this has a negative impact on the control characteristics and can result in oscillation and system instability.

The "V/f with FCC" control type (P1300 = 1) has proven itself in many applications. It has the following advantages with respect to the standard V/f control:

- Higher motor efficiency
- Improved stabilizing characteristics
  - higher dynamic response
  - improved behavior to disturbances/control.

Note

Contrary to closed-loop vector control, for the V/f open-loop control mode with FCC, it is not possible to specifically influence the motor torque. This is the reason that it isn’t always possible to avoid the motor stalling – even when using "V/f with FCC".

An improvement in the stabilizing behavior and in the motor efficiency can be expected when using the closed-loop vector control when compared to V/f control with FCC.

Input values

Table 6-41 Main function parameters

Parameter	Description	Setting
P1300 = …	**Control mode** 0: V/f with linear characteristic (default) 1: V/f with FCC 2: V/f with quadratic characteristic 3: V/f with programmable characteristic 4: reserved 5: V/f for textile applications 6: V/f with FCC for textile applications 19: V/f control with independent voltage setpoint 20: Sensorless vector control 21: Vector control with sensor 22: Sensorless vector torque-control 23: Vector torque-control with sensor	
P1333 = …	**Start frequency for FCC** 0 ... 100 %, default: 10 %: Defines start frequency at which FCC is enabled as [%] of rated motor frequency (P0310)	

6.10.2.5 Current limiting (Imax controller)

Data

Parameter range:	P1340 … P1346
	r0056 bit 13
Warnings:	A0501
Faults:	F0001
Function chart number:	FP6100

Description

In the V/f characteristic mode, the inverter has a current limiting controller in order to avoid overload conditions (I_max controller, see figure below). This controller protects the inverter and the motor against continuous overload by automatically reducing the inverter output frequency by f_{Imax} (r1343) or the inverter output voltage by V_{Imax} (r1344). By reducing the frequency and following the voltage, the stressing on the inverter is reduced and it is protected against continuous overload and damage.

If a regenerative Power Module (PM250, PM260, ET 200 FC or G120D) is connected and the motor operates in regenerative mode (r0032 < 0) the frequency will increase.

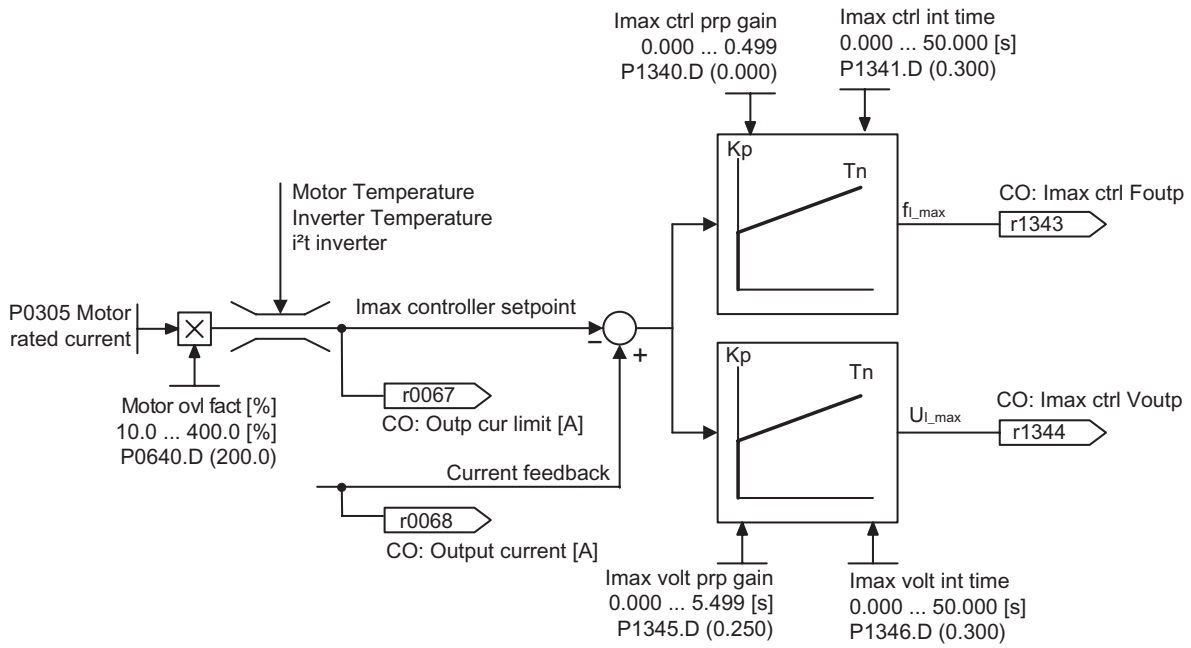

Figure 6-36 I_max controller

Note

The inverter load is only reduced when the frequency is reduced if the load decreases at lower speeds (e.g. square-law torque –speed characteristic of the motor load).

In regenerative mode the current will only decrease if the torque decreases with a higher frequency

Input values

Table 6-42 Main function parameters

Parameter	Description	Setting
P1340 = …	**I_max controller prop. gain** 0 ... 0.499, default 0: Proportional gain of the I_max controller	
P1341 = …	**I_max controller integral time** 0 ... 50 s, default 0.3 s: Integral time constant of the I_max controller 0 : The I_max controller is OFF	
P1345 = …	**I_max voltage ctrl. Prop. gain** 0 ... 5.499, default 0.250: Proportional gain of the I_max voltage controller	
P1346 = …	**I_max voltage ctrl. Integral time** 0 ... 50 s, default 0.3 s: Integral time constant of the I_max voltage controller	

Output value

Parameter	Description
r0056 bit13	**Status of motor control - I_max controller active/torque limit reached**
r1343	**I_max controller freq. Output** Displays effective frequency limitation of the inverter. If I_max controller not in operation, parameter normally shows max. frequency P1082.
r1344	**I_max controller volt. Output** Displays amount by which the I_max controller is reducing the inverter output voltage.

6.10.3 Vector Control

Description

Field-orientated Vector control (known as: Vector control) significantly improves torque control when compared to V/f control. The Vector control principle is based on the fact that for a specific load situation or required torque, the required motor current is impressed with respect to the motor flux so that the appropriate torque is obtained. If the stator current is emulated in a circulating coordinate system, linked with the rotor flux Φ, then it can be broken-down into the flux-generating current component i_d in-line with the rotor flux and into a torque-generating current component i_q, vertical to the rotor flux. These components are corrected to track their setpoints in the current controller using their own dedicated PI controllers and are equal quantities in steady-state operation.

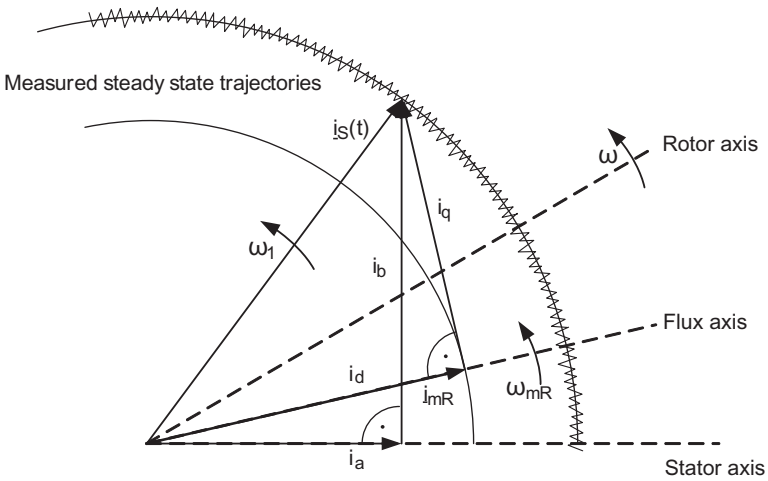

Figure 6-37 Current vector diagram in a steady-state condition

In the steady-state condition, the field-generating current component id is proportional to the flux Φ and the torque is proportional to the product of i_d and i_q.

$M \sim \Phi * i_q$

$\Phi \sim i_{d,stat}$

$M \sim i_d * i_q$

When compared to V/f control, Vector control has the following advantages:

- Stable during load and setpoint changes
- Short rise times for setpoint changes (→ better control performance)
- Short rise times for load changes (→ better noise/disturbance characteristics)
- Accelerating and braking are possible with a max. adjustable torque
- The motor and motor machine are protected using the adjustable torque limit, both when motoring and regenerating
- The motor and braking torque are controlled independently of the speed
- Full holding torque is possible at 0 speed.

These advantages are, under certain circumstances, already achieved without using speed feedback.

The Vector control can be used both with and without speed encoder.

The following criteria provide a basis as to when a speed actual value encoder is required:

- High speed accuracy is required
- High requirements are placed on the dynamic response
  - Improved control performance
  - Improved immunity to disturbances.
- The torque is to be controlled over a control range greater than 1:10
- A defined and/or a changing torque has to be maintained for speeds below approx. 10 % of the rated motor frequency P0310.

When it comes to entering a setpoint, the Vector control (see table below) is sub-divided into:

- Closed-loop speed control, and
- Closed-loop torque/current control (known as: Closed-loop torque control).

Table 6-43 Vector control versions

Vector control (closed-loop)	Without encoder	With encoder
Closed-loop speed control	P1300 = 20 and P1501 = 0	P1300 = 21 and P1501 = 0
Closed-loop torque control	P1300 = 22 or	P1300 = 23 or
	P1300 = 20 and P1501 = 1	P1300 = 21 and P1501 = 1

When closed-loop speed control is used, the closed-loop torque control is secondary. This type of cascaded closed-loop control has proven itself in practice regarding commissioning and increased transparency.

6.10.3.1 Vector Control without Speed Encoder

Data

Parameter range:	P1400 … P1780
Warnings:	-
Faults:	-
Function chart number:	FP7000

Description

When Vector control is used without a speed encoder (SLVC) then the position of the flux and the actual frequency must be determined using the motor model.

> ⚠ CAUTION
>
> If, for example, due to an overload of the motor the inverter loses orientation. It will not be possible to switch off using an OFF1 or an OFF3 command. In this case it is necessary to initiate an OFF2 command or disable the pulses using P0054.3.

In this case, the model is supported by the accessible currents and voltages. At low frequencies (≈ 0 Hz), the model is not able to determine the speed. Inability of the model to determine the speed at ≈ 0 Hz, uncertainty in model parameters and measurement inaccuracy are the reasons why there is a changeover from closed-loop to open-loop controlled operation in this range.

The changeover between closed-loop controlled and open-loop controlled operation is controlled using the time and frequency conditions (P1755, P1756, P1758) (see figures below). The system does not wait for the time condition, if the setpoint frequency at the ramp-function generator input and the actual frequency simultaneously lie below $f_{open\ loop}$.

$$f_{open\ loop} = P1755\ [Hz] * \frac{P1756\ [\%]}{100\ [\%]}$$

Example for fset < 0,5 x fopen loop and fact > fopen loop

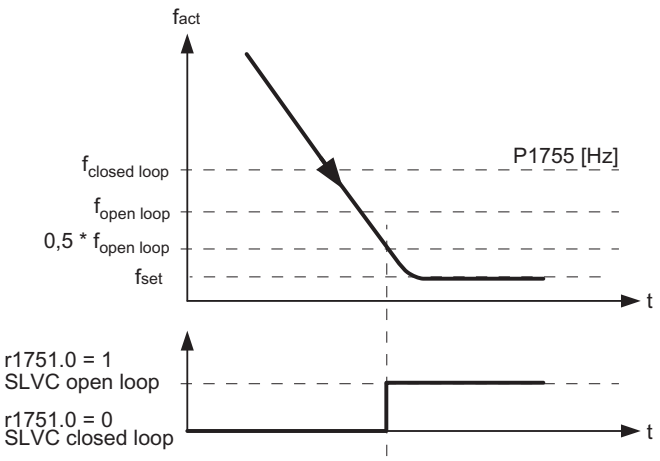

Figure 6-38 Changeover condition during ramp down for SLVC

Coming form open loop control, the control mode changes to closed loop control depending on the time and frequency condition (P1755, P1756, P1759, see figure below). The time set in P1759 will be ignored if the actual frequency exceeds the value of P1755.

Example for fset > fclosed loop and fact < fopen loop

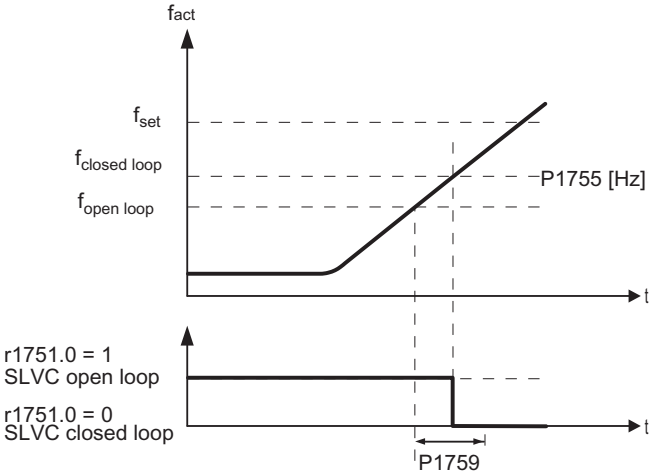

Figure 6-39 Changeover condition during ramp up for SLVC

Example for changeover condition during ramp up to a negative setpoint: |fset| > 0,5 x fopen loop

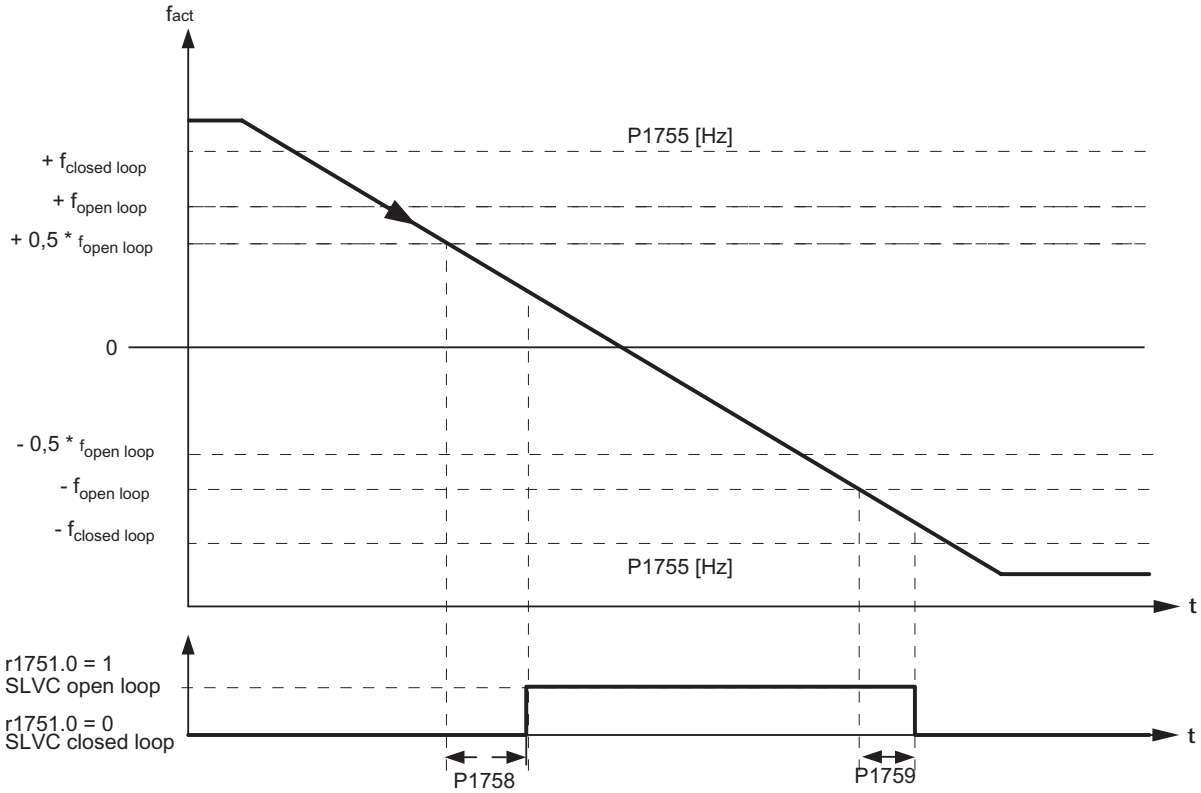

Figure 6-40 Changeover condition during ramp down to negative setpoint for SLVC

Note

In the open-loop controlled mode, the speed actual value is the same as the setpoint. For suspended loads or when accelerating, parameter P1610 (constant torque boost) and P1611 (torque boost when accelerating) must be modified in order to allow the motor to provide the steady-state and/or dynamic load torque. If P1610 is set to 0 %, then only the magnetizing current r0331 is impressed for a value of 100 % of the rated motor current P0305. In order that the motor does not stall when accelerating, P1611 can be increased or the acceleration pre-control can be used for the speed controller. This is also practical in order that the motor is not thermally overloaded at low speeds.

For Vector control without speed actual value encoder the inverter has, in the low frequency range, the following outstanding features with respect to other AC inverters:

- Closed-loop controlled operation down to ≈ 1 Hz
- Can start in the closed-loop controlled mode (immediately after the motor has been energized)
- The low frequency range (0 Hz) is passed-through in closed-loop controlled operation.

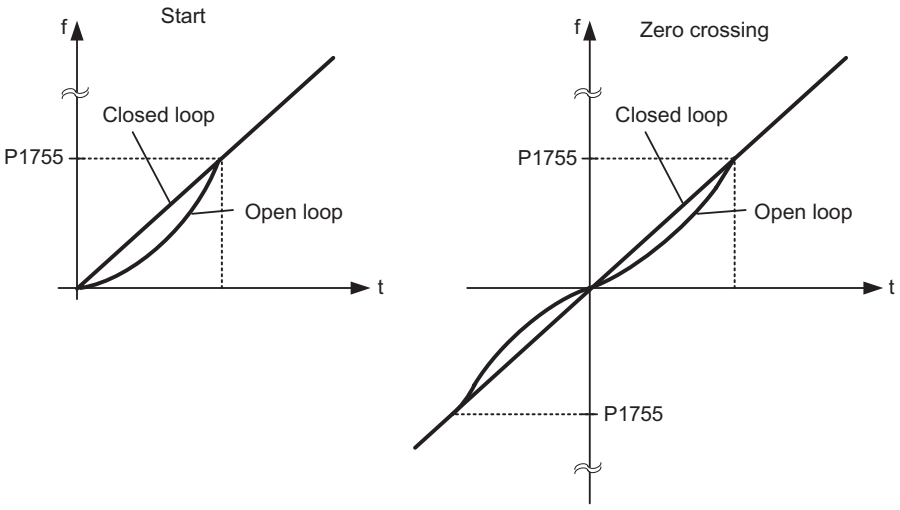

Figure 6-41 Starting and passing through 0 Hz in closed-loop control

The following advantages are obtained as a result of closed-loop controlled operation down to approx. 1 Hz (this can be selected using parameter P1755) as well as the possibility to immediately start closed-loop controlled at 0 Hz or to reverse closed-loop controlled (this can be set using parameter P1750):

- No changeover operation is required within the closed-loop control (smooth behavior –no frequency dips)
- Continuous closed-loop speed-torque control is possible down to approx. 1 Hz.

Note

For closed-loop controlled reversing or closed-loop controlled starting from 0 Hz it must be taken into account that when staying too long (> 2 s or > P1758) in the range around 0 Hz, that the closed-loop control automatically changes over from closed-loop into the open-loop controlled mode.

Input values

Table 6-44 Main function parameters

Parameter	Description	Setting
P1400 = …	**Configuration of speed control** Bit 0: Automatic Kp adaption Bit 1: Integral freeze (SLVC)	
P1442 = …	**Filter time for actual speed** 0 ... 32000 s, default: 2 s	
P1452 = …	**Filter time for actual speed (SLVC)** 0 ... 32000 s, default: 2 s	
P1488 = …	**Droop input source** 0: Droop disabled 1: Torque setpoint 2: Speed controller output 3: Speed controller integral output	
P1492 = …	**Enable droop** possible sources: 722.x (digital input) / 2033.11 (option port) / 2091.11 (serial interface)	
P1496 = …	**Scaling accel. precontrol** 0 ... 400 %, default 0 %	
P1499 = …	**Scaling accel. Torque control** 0 ... 400 %, default 100 %	
P1500 = …	**Selection of torque setpoint** 0: No Main setpoint 2: Analog setpoint 4: USS on RS232 5: Analog setpoint 2 ... 77: Analog setpoint 2 + Analog setpoint 2	
P1501 = …	**Change to torque control** Selects command source from which it is possible to change between speed and torque control	
P1503 = …	**Torque setpoint** Selects source of torque setpoint for torque control	
P1530 = …	**Motoring power limitation** 0 ... 8000 N, default 0.75 N: Defines fixed value for the max. permissible motoring active power (motoring power limitaton)	
P1531 = …	**Regenerative power limitation** -8000 ... 0 N, default -0.75 N: Enters fixed value for the max. permissible regenerative active power (regenerative power limitation)	
P1750 = …	**Control word of motor model** Bit 00: Start SLVC open loop Bit 01: Zero crossing SLVC open loop	

Table 6-45 Additional commissioning parameters

Parameter	Description	Setting
P1470 = …	Gain speed controller (SLVC) 0 ... 2000, default 3	
P1472 = …	Integral time n-ctrl. (SLVC) 25 ... 32001 s, default 400 s	
P1477 = …	Set integrator of n-ctrl Selects command source for enabling of integrator setting	
P1478 = …	Set integrator value n-ctrl Selects source for integral part of speed controller	
P1489 = …	Droop scaling 0 ... 0.5 %, default 0.05 %	
P1511 = …	Additional torque setpoint Selects source of additional torque setpoint for torque and speed control	
P1520 = …	Upper torque limit -99999 ... 99999 Nm, default 5.13 Nm	
P1521 = …	Lower torque limit -99999 ... 99999 Nm, default -5.13 Nm	
P1522 = …	Upper torque limit Selects source of upper torque limitation: default 1520	
P1523 = …	Lower torque limit Selects source of lower torque limitation: default 1521	
P1525 = …	Scaling lower torque limit -400 ... 400 %, default 100 %	
P1570 = …	Fixed value flux setpoint 50 ... 200 %, default 100 %: Defines fixed value of setpoint relative to rated motor flux	
P1574 = …	Dynamic voltage headroom 0 ... 150 V, default 10 V	
P1580 = …	Efficiency optimization 0 ... 100 %, default 0 %: Enters degree of efficiency optimization	
P1582 = …	Smooth time for flux setpoint 4 ... 500 s, default 15 s	
P1596 = …	Int. Time field weak. controller 20 ... 32001 s, default 50 s	
P1610 = …	Continuous torque boost (SLVC) 0 ... 200 %, default 50 %: Value relative to rated motor torque r0333	
P1611 = …	Acc. Torque boost (SLVC) 0 ... 200 %, default 0 %: Value relative to rated motor torque r0333	
P1654 = …	Smooth time for Isq setpoint 2 ... 20 s, default 6 s	
P1715 = …	Gain current controller 0 ... 5, default 0.25	
P1717 = …	Integral time current controller 1 ... 50 s, defualt 4.1 s	
P1740 = …	Gain for oscillation damping 0 ... 10, default 0	
P1745 = …	Flux variance limit in stall 0 ... 1000 %, default 5 %	

Parameter	Description	Setting
P1755 = …	**Start-freq. Motor model (SLVC)** 0.1 ... 250 Hz, default 5 Hz: Enters start frequency of sensoreless vector control	
P1756 = …	**Hyst.-freq. Motor model (SLVC)** 10 ... 100 %, default 50 %: Hysteresis frequency in percent of start-frequency (P1755)	
P1758 = …	**T (wait) transit to feed-fwd-mode** 100 ... 2000 ms, default 1500 ms: Sets waiting time for chance from closed-loop to open-loop control mode.	
P1759 = …	**T(wait) transit to closed loop** 0 … 2000 ms, default 0 ms: sets waiting time for change from open-loop to closed-loop control mode.	
P1764 = …	**Kp of n-adaption (SLVC)** 0 ... 2.5, default 0.2	
P1767 = …	**Tn of n-adaption (SLVC)** 1 ... 200 s, default 4 s: Enters speed adaption controller integral time	
P1780 = …	**Control word of Rs/Rr-adaption** Bit 00: Enable thermal Rs/Rr-adapt. Bit 01: Enable observer Rs-adapt. Bit 02: Enable observer Xm-adapt.	

Output value

Parameter	Description
r1407	**Status 2 of motor control** Bit 00: V/f control enabled Bit 01: SLVC enabled Bit 02: Torque ccontrol enabled Bit 05: Stop I-comp. Speed control Bit 06: Set I-comp. Speed controller Bit 08: Upper torque limit active Bit 09: Lower torque limit active Bit 10: Droop active Bit 15: DDS change active
r1438	**Freq. Setpoint to controller**
r1445	**Actual filtered frequency**
r1482	**Integral output of n-ctrl**
r1490	**Droop frequency**
r1508	**Torque setpoint**
r1515	**Additional torque setpoint**
r1518	**Acceleration torque**
r1526	**Upper torque limitation**
r1527	**Lower torque limitation**
r1536	**Max. trq. Motoring current**
r1537	**Max. trq. Regenerative current**
r1538	**Upper torque limit (total)**
r1539	**Lower torque limit (total)**
r1583	**Flux setpoint (smoothed)**
r1597	**Output field weak . controller**

Parameter	Description
r1598	Flux setpoint (total)
r1718	Output of Isq controller
r1719	Integral output of Isq ctrl.
r1723	Output of Isd controller
r1724	Integral output of Isd ctrl.
r1725	Integral limit of Isd ctrl.
r1728	Decoupling voltage
r1746	Actual flux variance
r1751	Status word of motor model Bit 00: Transit to SLVC open loop Bit 01: N-adaption enabled Bit 02: Transit to SLVC closed loop Bit 03: Speed controller enabled Bit 04: Current injection Bit 05: Start flux decrease Bit 14: Rs adapted Bit 15: Xh adapted
r1770	Prop. Output of n-adaption
r1771	Int. Output of n-adaption
r1778	Flux angle difference

6.10.3.2 Vector control with speed encoder

Data

This function is not available for ET 200pro FC

Parameter range:	P1400 … P1740
	P0400 … P0494
Warnings:	-
Faults:	-
Function chart number:	FP7000

Description

For Vector control with speed encoder (VC), a pulse encoder, e.g. an encoder with 1024 pulses per revolution is required. In addition to the correct wiring, the pulse encoder must be activated, corresponding to the encoder type, using the parameter range P0400 … P0494.

Note

Even when using speed control with encoder it may be necessary to adapt the calculations of the motor model using the integral and proportional part of speed adaptation (r1770/r1771). The limits can be adjusted via P1752 and P1756:

Whereby:

No speed adaption if r0066 (Output Frequency) < P1752 *(P1756 %/100 %)

Speed adaption via ramp function if

P1752 *(P1756 %/100 %) < r0066 (Output Frequency) < P1752

Full speed adaption if P1752 < r0066 (Output Frequency)

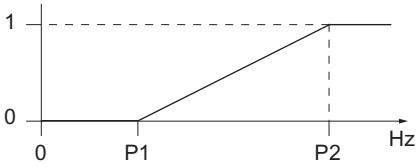

$$P1 = P1752\ [Hz] * \left(\frac{P1756\ [\%]}{100\ \%}\right)$$

P2 = P1752 [Hz]

Parameter	Terminal	Track	Encoder output
P0400 = 2	A B	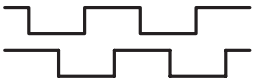	single-ended
	A AN B BN	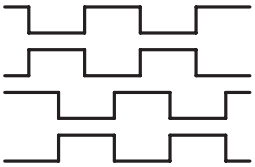	differential

Figure 6-42 P0400 settings for a pulse encoder

Advantages of Vector control with encoder:

- The speed can be closed-loop controlled down to 0 Hz (e.g. at standstill)
- Stable control behavior over the complete speed range
- Constant torque in the rated speed range
- When compared to closed-loop speed control without encoder, the dynamic response for motors with encoder is significantly higher as the speed is directly measured and is incorporated in generating the model of current components i_d, i_q.

Input values

Table 6-46 Main function parameters

Parameter	Description	Setting
P0400 = …	**Select encoder type** 0: Disabled (default) 2: Quadrature encoder without zero pulse 12: Quadrature encoder with zero pulse	
P0405 = …	**Enables selection of various pulse types** Bit 04: Invert Z-pulse Bit 05: Z-pulse = Z-pulse & A-pulse & B-pulse	
P0408 = …	**Encoder pulses per revolution** 2 ... 20000, default 1024	
P0410 = …	**Reverses internal direction sense** 0: Encoder Normal Rotation 1: Encoder Reverse Rotation	
P0491 = …	**Reaction on speed signal loss** 0: Trip the drive 1: Warn and switch to SLVC if in SVC	
P0492 = …	**Allowed speed difference** 0 ... 100%, default 10%: Used for low and high speed encoder loss detection	
P0494 = …	**Delay speed loss reaction** 0 ... 65000 s, default 10 s: Selects the delay between loss of encoder at low speed and reaction to the encoder loss	
P1400 = …	**Configuration of speed control** Bit 0: Automatic Kp adaption Bit 1: Integral freeze (SLVC)	

Parameter	Description	Setting
P1442 = …	**Filter time for actual speed** 0 ... 32000 s, default: 2 s	
P1452 = …	**Filter time for actual speed (SLVC)** 0 ... 32000 s, default: 2 s	
P1488 = …	**Droop input source** 0: Droop disabled 1: Torque setpoint 2: Speed controller output 3: Speed controller integral output	
P1492 = …	**Enable droop** possible sources: 722.x (digital input) / 2033.11 (option port) / 2091.11 (serial interface)	
P1496 = …	**Scaling accel. precontrol** 0 ... 400%, default 0%	
P1499 = …	**Scaling accel. Torque control** 0 ... 400%, default 100%	
P1500 = …	**Selection of torque setpoint** 0: No Main setpoint 2: Analog setpoint 4: USS on RS232 5: Analog setpoint 2 ... 77: Analog setpoint 2 + Analog setpoint 2	
P1501 = …	**Change to torque control** Selects command source from which it is possible to change between speed and torque control	
P1503 = …	**Torque setpoint** Selects source of torque setpoint for torque control	
P1530 = …	**Motoring power limitation** 0 ... 8000 N, default 0.75 N: Defines fixed value for the max. permissible motoring active power (motoring power limitaton)	
P1531 = …	**Regenerative power limitation** -8000 ... 0 N, default -0.75 N: Enters fixed value for the max. permissible regenerative active power (regenerative power limitation)	

Table 6-47 Additional commissioning parameters

Parameter	Description	Setting
P1460 = …	**Gain speed controller** 0 ... 2000, default: 3	
P1462 = …	**Integral time speed controller** 25 ... 32001 s, default: 400 s	
P1477 = …	**Set integrator of n-ctrl** Selects command source for enabling of integrator setting	
P1478 = …	**Set integrator value n-ctrl** Selects source for integral part of speed controller	
P1489 = …	**Droop scaling** 0 ... 0.5%, default 0.05%	

Parameter	Description	Setting
P1511 = …	**Additional torque setpoint** Selects source of additional torque setpoint for torque and speed control	
P1520 = …	**Upper torque limit** -99999 ... 99999 Nm, default 5.13 Nm	
P1521 = …	**Lower torque limit** -99999 ... 99999 Nm, default -5.13 Nm	
P1522 = …	**Upper torque limit** Selects source of upper torque limitation: default 1520	
P1523 = …	**Lower torque limit** Selects source of lower torque limitation: default 1521	
P1525 = …	**Scaling lower torque limit** -400 ... 400%, default 100%	
P1570 = …	**Fixed value flux setpoint** 50 ... 200%, default 100%: Defines fixed value of setpoint relative to rated motor flux	
P1574 = …	**Dynamic voltage headroom** 0 ... 150 V, default 10 V	
P1580 = …	**Efficiency optimization** 0 ... 100%, default 0%: Enters degree of efficiency optimization	
P1582 = …	**Smooth time for flux setpoint** 4 ... 500 s, default 15 s	
P1596 = …	**Int. Time field weak. controller** 20 ... 32001 s, default 50 s	
P1610 = …	**Continuous torque boost (SLVC)** 0 ... 200%, default 50%: Value relative to rated motor torque r0333	
P1611 = …	**Acc. Torque boost (SLVC)** 0 ... 200%, default 0%: Value relative to rated motor torque r0333	
P1654 = …	**Smooth time for Isq setpoint** 2 ... 20 s, default 6 s	
P1715 = …	**Gain current controller** 0 ... 5, default 0.25	
P1717 = …	**Integral time current controller** 1 ... 50 s, defualt 4.1 s	
P1740 = …	**Gain for oscillation damping** 0 ... 10, default 0	
P1752= …	**Start frequency of the n adaption in vector control with encoder** 0.1 ... 250 Hz, default 5 Hz	
P1756	**Activation/deactivation of speed adaption in vector control with encoder** 10 ... 100 %, default 50 %	

Output value

Parameter	Description
r0403	Encoder Status word Bit 00: Encoder module active Bit 01: Encoder error Bit 02: Signal o.k. Bit 03: Encoder Low Speed Loss Bit 04: Speed Measurement using one encoder pulse edge
r1438	Freq. Setpoint to controller
r1445	Actual filtered frequency
r1482	Integral output of n-ctrl
r1490	Droop frequency
r1508	Torque setpoint
r1515	Additional torque setpoint
r1518	Acceleration torque
r1526	Upper torque limitation
r1527	Lower torque limitation
r1536	Max. trq. Motoring current
r1537	Max. trq. Regenerative current
r1538	Upper torque limit (total)
r1539	Lower torque limit (total)
r1583	Flux setpoint (smoothed)
r1597	Output field weak . controller
r1598	Flux setpoint (total)
r1718	Output of Isq controller
r1719	Integral output of Isq ctrl.
r1723	Output of Isd controller
r1724	Integral output of Isd ctrl.
r1725	Integral limit of Isd ctrl.
r1728	Decoupling voltage
r1770	Prop. output of n-adaption
r1771	Int. output of n-adaption

6.10.3.3 Speed controller

Data

Parameter range:	P1300, P1400 … P1780 SLVC: P1470, P1472, P1452 VC: P1460, P1462, P1442
Warnings:	-
Faults:	-
Function chart number:	FP7500, FP7510

Description

Both of the control techniques (SLVC and VC) have the same speed controller structure which includes the following components:

- PI controller
- Speed controller pre-control
- Droop

The sum of the output quantities forms the speed setpoint, which is reduced to the permissible level using the torque setpoint limiting function.

Speed controller (SLVC: P1470, P1472, P1452 VC: P1460, P1462, P1442)

The speed controller (see figure below) receives its setpoint r0062 from the setpoint channel, the actual value r0063 either directly from the speed actual value encoder for VC or through the motor model for SLVC. The system error is amplified by the PI controller and, together with the pre-control, forms the torque setpoint.

For increasing load torques, when the droop function is active, the speed setpoint is proportionally reduced so that the load on an individual motor within a group (where two or several motors are mechanically coupled) is reduced when excessively high torques occur.

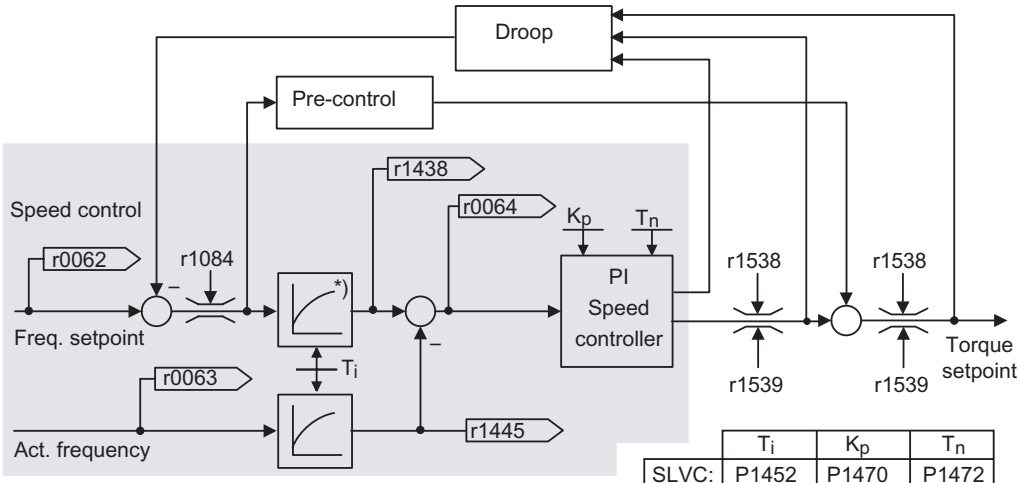

	T_i	K_p	T_n
SLVC:	P1452	P1470	P1472
VC:	P1442	P1460	P1462

*) only active, if pre-control is enabled (P1496>0)

Figure 6-43 Speed controller

If the moment of inertia was entered, the speed controller (K_p,T_n) can be calculated using the automatic parameterization (P0340 = 4). The controller parameters are defined according to the symmetrical optimum as follows:

$T_n = 4 * T_\sigma$

$K_p = \lambda * r0345 / T_\sigma = 2 * r0345 / T_n$

T_σ = sum of the low delay times

If oscillations occur with these particular settings, then the speed controller gain K_p should be manually reduced. It is also possible to increase the speed actual value smoothing (this is the usual procedure for gearbox play or high-frequency torsional oscillations) and then re-call the controller calculation as the value is incorporated in the computation of K_p and T_n.

The following interrelationships apply for the optimization routine:

- If K_p is increased then the controller becomes faster and the overshoot is reduced. However, the signal ripple and oscillations in the speed controller loop are increased.
- If T_n is reduced, then the controller also becomes faster. However, the overshoot increases.

When manually adjusting the speed control, the simplest procedure is to initially define the possible dynamic response using K_p (and the speed actual value smoothing) in order to then reduce the integral action time as far as possible. In this case it is important to ensure that the closed-loop control must also remain stable in the field-weakening range.

When oscillations occur in the closed-loop speed control, it is generally sufficient to increase the smoothing time in P1452 for SLVC or P1442 for VC (or to reduce the controller gain) in order to dampen oscillations.

The integral output of the speed controller can be monitored using r1482 and the unlimited controller output can be monitored using r1508 (torque setpoint).

Note

When compared to closed-loop control with encoder, the dynamic response for sensorless motors is significantly reduced. This is because the speed can only be derived from the inverter output quantities for current and voltage which have the appropriate noise level.

Speed controller pre-control (P1496, P0341, P0342)

The control behavior of the speed control loop can be improved if the speed controller of the inverter also generates values for the current setpoints (corresponds to the torque setpoint) from the speed setpoint. The torque setpoint m_v, is calculated as follows:

$$m_v = P1496 * \Theta * \frac{d\omega_{set}}{dt} = P1496 * P0341 * P0342 * \frac{d\omega_{set}}{dt}$$

This is entered into the current controller through an adaptation element directly as an additive control quantity (this is enabled using P1496).

The motor moment of inertia P0341 is directly calculated during the quick commissioning or the complete parameterization (P0340 = 1). The factor P0342 between the total moment of inertia and motor moment of inertia must be manually determined.

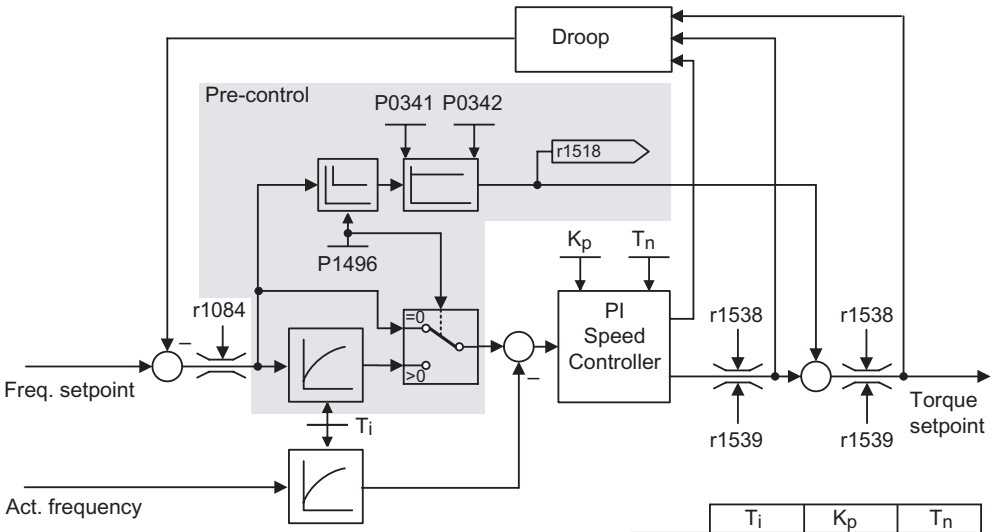

	T_i	K_p	T_n
SLVC:	P1452	P1470	P1472
VC:	P1442	P1460	P1462

Figure 6-44 Speed controller with pre-control

When correctly adapted, the speed controller only has to correct noise quantities/disturbances in its control loop and this is achieved with a relatively low manipulated quantity change. On the other hand, speed setpoint changes bypass the speed controller and are therefore executed faster.

The effect of the pre-control quantity can be adapted, depending on the particular application, using the pre-control factor P1496. Using P1496 = 100 %, the pre-control is calculated according to the motor and load moment of inertia (P0341, P0342). In order that the speed controller does not work against the torque setpoint which is entered, a balancing filter is automatically used. The time constant of the balancing filter corresponds to the equivalent delay time of the speed control loop. The speed controller pre-control is correctly set (P1496 = 100 %, calibrated using P0342), if the I component of the speed controller (r1482) does not change during a ramp-up or ramp-down in the range n > 20 % * P0310. This means, using the pre-control, it is possible to approach a new speed setpoint without overshoot (prerequisite: The torque limiting does not intervene and the moment of inertia remains constant).

If the speed controller is pre-controlled, then the speed setpoint (r0062) is delayed with the same smoothing (P1442 or P1452) as the actual value (r1445). This ensures that when accelerating, there is no setpoint – actual value difference (r0064) at the controller input which would have been exclusively caused by the signal propagation time.

When the **speed pre-control is activated**, it must be ensured that the **speed setpoint is continuously entered and without any significant noise level** (avoid torque surges). An appropriate signal can be generated by smoothing the analog signal P0753 or by activating the rounding-off function of the ramp-function generator P1130 to P1133.

Note

The ramp-up and ramp-down times (P1120, P1121) of the ramp-function generator in the setpoint channel should only be set so fast that when accelerating and braking, the motor speed can follow the setpoint. This then guarantees the optimum functioning of the speed controller pre-control.

The starting time r0345 is a measure for the overall moment of inertia of the machine and describes that time in which the unloaded motor can accelerate from standstill to the rated motor speed P0311 with the rated motor torque r0333.

$$r0345 = T_{starting} = \Theta \cdot \frac{2 \cdot \pi \cdot n_{Mot,rated}}{60 \cdot M_{Mot,rated}} = P0341 \cdot P0342 \cdot \frac{2 \cdot \pi \cdot P0311}{60 \cdot r0333}$$

If these secondary conditions match the particular application, then the starting time can be used as the shortest value for the ramp-up and ramp-down times.

Droop (P1488 … P1492)

The droop (enabled using P1488) means that with increasing load torque, the speed setpoint is proportionally reduced.

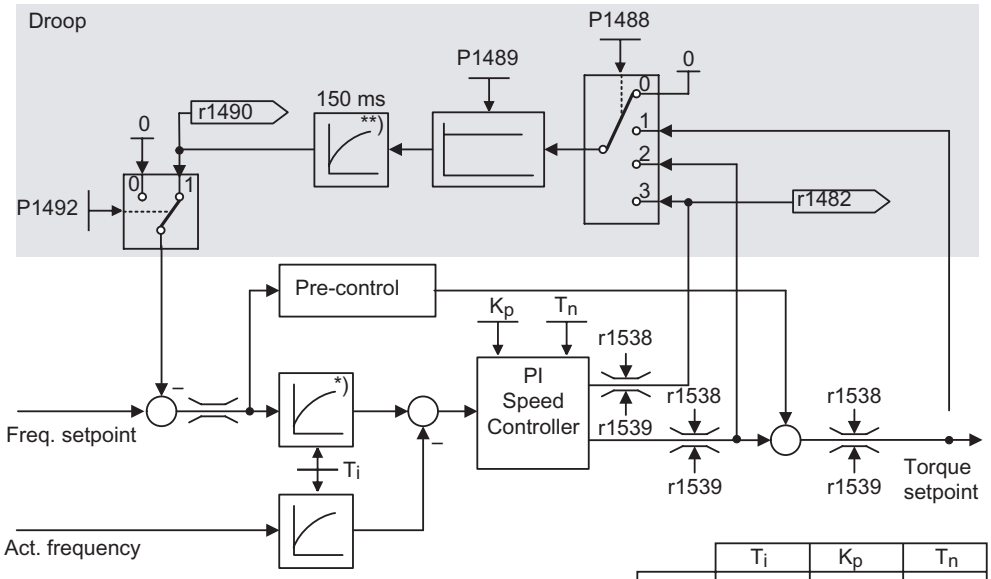

	T_i	K_p	T_n
SLVC:	P1452	P1470	P1472
VC:	P1442	P1460	P1462

*) only active, if pre-control is enabled (P1496 > 0)
**) only active with SLVC

Figure 6-45 Speed controller with droop

Droop is the simplest method to implement load sharing control. However, this load sharing control can only be used if the motors are operated more or less under steady-state conditions (e.g. at constant speed). For motors, which are frequently accelerated and braked with high speed changes, this technique is only conditionally suitable.

The most simple load sharing control is, e.g., used for applications where two or several motors are mechanically coupled or operate on a common shaft and which have to fulfill the requirements above. In this case, the droop controls torsional stressing associated with the mechanical coupling by changing the speeds of the individual motors (excessive torques are reduced for an individual motor).

Prerequisite

- All of the motors must be operated with closed-loop Vector speed control (with or without speed actual value encoder)
- The ramp-up and ramp-down times of the ramp-function generator must be identical for all of the motors.

6.10.3.4 Closed-loop torque control

Data

Parameter range:	P1300, P1500 … P1511 P1400 … P1780
Warnings:	-
Faults:	-
Function chart number:	FP7200, FP7210, FP7700, FP7710

Description

For sensorless closed-loop speed control SLVC (P1300 = 20) or for closed-loop speed control with sensor VC (P1300 = 21), it is possible to changeover to closed-loop torque control (slave motor) using BICO parameter P1501. It is not possible to changeover between closed-loop speed and torque control if the closed-loop torque control is directly selected using P1300 = 22 or 23. The torque setpoint and supplementary torque setpoint can be selected using parameter P1500 and also using BICO parameter P1503 (CI: Torque setpoint) or P1511 (CI: Supplementary torque setpoint). The supplementary torque acts both for the closed-loop torque control as well as for the closed-loop speed control (see figure below). As a result of this feature, a pre-control torque for the speed control can be implemented using the supplementary torque setpoint.

Note

For safety reasons, it is presently not possible to assign fixed torque setpoints.

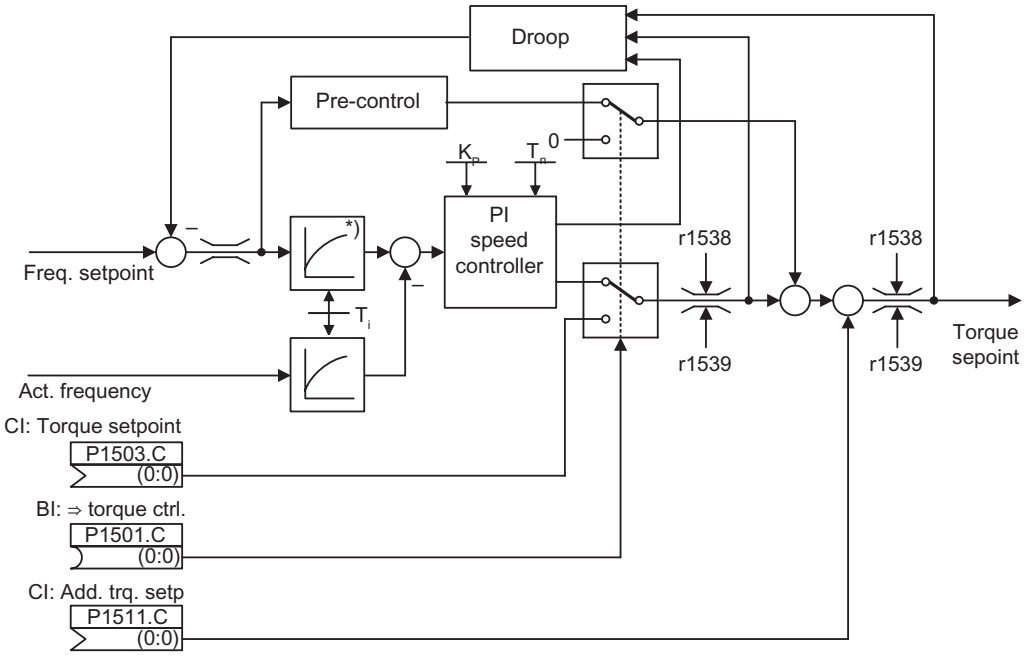

*) only active, if pre-control is enabled (P1496 > 0)

	T_i	K_P	T_n
SLVC:	P1452	P1470	P1472
VC:	P1442	P1460	P1462

Figure 6-46 Closed-loop speed and torque control

The sum of both torque setpoints is limited in the same way as the torque setpoint of the speed control. Above the maximum speed (plus 3%), a speed limiting controller reduces the torque limits in order to prevent the motor accelerating any further.

A "real" closed-loop torque control (with automatically set speed) is only possible in the closed-loop controlled range but not in the open-loop controlled range. In the open-loop controlled range, the torque setpoint changes the setpoint speed through a ramp-up integrator (integration time ~ P1499 * P0341 * P0342). This is the reason that sensorless closed-loop torque control in the area around standstill (0 speed) is only suitable for applications which require an accelerating torque and not a load torque (e.g. traversing motors). For closed-loop torque control with sensors, this restriction does not apply.

If the closed-loop torque control is active, and a fast stop command (OFF3) is output, then the system automatically changes-over to closed-loop speed control and braking of the motor is started. If a normal stop command (OFF1) is output, there is no changeover. Instead, the system waits until a higher-level control has brought the motor to a standstill, in order to inhibit the pulses. This is necessary in order to allow the master and slave motors to be shut down together. For P1300 = 22 or 23, for OFF1, the motor is directly powered-down (as for OFF2).

6.10.3.5 Closed-loop torque control (SLVC)

Description

Parameter range:	P1300, P1500 … P1511
	P1400 … P1780
Warnings:	-
Faults:	-
Function chart number:	FP7200, FP7700

For sensorless closed-loop speed control (P1300 = 20) it is possible to changeover to closed-loop torque control (slave motor) using BICO parameter P1501. It is not possible to changeover between closed-loop speed and torque control if the closed-loop torque control is directly selected using P1300 = 22. The torque setpoint and supplementary torque setpoint can be selected using parameter P1500 and also using BICO parameter P1503 (CI: Torque setpoint) or P1511 (CI: Supplementary torque setpoint). The supplementary torque acts both for the closed-loop torque control as well as for the closed-loop speed control (see figure below). As a result of this feature, a pre-control torque for the speed control can be implemented using the supplementary torque setpoint.

Note

For safety reasons, it is presently not possible to assign fixed torque setpoints.

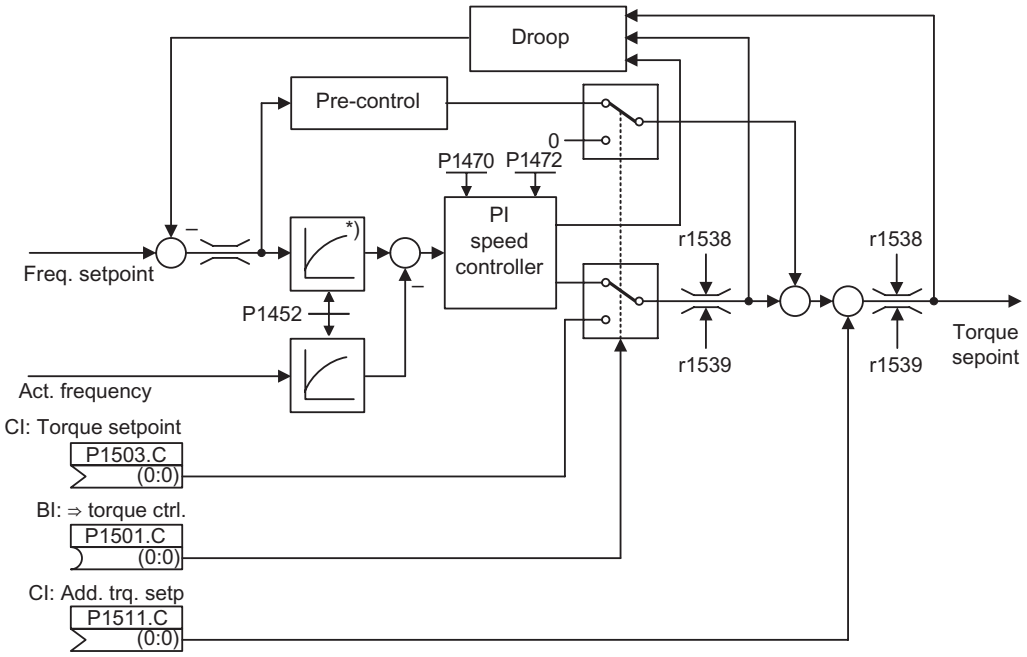

*) only active, if pre-control is enabled (P1496 > 0)

Figure 6-47 Closed-loop speed and torque control

The sum of both torque setpoints is limited in the same way as the torque setpoint of the speed control. Above the maximum speed (plus 3%), a speed limiting controller reduces the torque limits in order to prevent the motor accelerating any further.

A "real" closed-loop torque control (with automatically set speed) is only possible in the closed-loop controlled range but not in the open-loop controlled range. In the open-loop controlled range, the torque setpoint changes the setpoint speed through a ramp-up integrator (integration time ~ P1499 * P0341 * P0342). This is the reason that sensorless closed-loop torque control in the area around standstill (0 speed) is only suitable for applications which require an accelerating torque and not a load torque (e.g. traversing motors).

If the closed-loop torque control is active, and a fast stop command (OFF3) is output, then the system automatically changes-over to closed-loop speed control and braking of the motor is started. If a normal stop command (OFF1) is output, there is no changeover. Instead, the system waits until a higher-level control has brought the motor to a standstill, in order to inhibit the pulses. This is necessary in order to allow the master and slave motors to be shut down together. For P1300 = 22, for OFF1, the motor is directly powered-down (as for OFF2).

⚠ CAUTION
If, for example, due to an overload of the motor the inverter loses orientation. It will not be possible to switch off using an OFF1 or an OFF3 command. In this case it is necessary to initiate an OFF2 command or disable the pulses using P0054.3.

6.10.3.6 Switch-over from Frequency to Torque Control

Data

Parameter range:	P1300, P1501
Warnings:	-
Faults:	-
Function chart number:	-

Description

CAUTION
Don't use SS1 or SLS in conjunction with torque control Torque control should not be used in conjunction with the fail-safe functions SS1 and SLS, because the speed ramp functions, necessary for SS1 and SLS are not available together with the torque control. So, if activating SS1 or SLS in case of torque control, a passivated STO will be generated immediately (after the time, calculated in section "Limiting values for SS1 and SLS" has been passed) if the output frequency exceeds the safety envelope. The STO can be used with torque control without any restrictions.

The torque control is switched-on via parameter P1501 during operation or selected with parameter P1300 = 22, 23.

Table 6-48 Torque control

Control mode		P1501 = ON
Closed-loop speed control	P1300 = 20, 21	OFF1 command is not recognized.
	+ fail-safe functions SLS, SS1	A safety fault is generated when the output frequency leaves the safety envelope.
Torque control	P1300 = 22, 23	OFF1 command recognized as OFF2.
	+ fail-safe functions SLS, SS1	A safety fault is generated when the output frequency leaves the safety envelope.

Input values

Table 6-49 Main function parameters

Parameter	Description (Parameter name and factory setting (if not variable) in bold)	Setting
P1300 = …	**Control mode** 0: V/f with linear characteristic (default) 1: V/f with FCC 2: V/f with quadratic characteristic 3: V/f with programmable characteristic 4: reserved 5: V/f for textile applications 6: V/f with FCC for textile applications 19: V/f control with independent voltage setpoint 20: Sensorless vector control 21: Vector control with sensor 22: Sensorless vector torque-control 23: Vector torque-control with sensor	
P1501 = …	**Change to torque control** Selects command source from which it is possible to change between speed and torque control	

6.10.3.7 Limiting the torque setpoint

Data

Parameter range:	P1520 … P1531 P0640, r0067 r1407 bit 08, r1407 bit 09
Warnings:	-
Faults:	-
Function chart number:	FP7700, FP7710 (CU240S)

Description

All of the following limits act on the torque setpoint which is either entered at the speed controller output for closed-loop speed control or as torque input for closed-loop torque control. The minimum is used from the various limits. This minimum is cyclically computed in the inverter and displayed in parameters r1538, r1539.

- r1538 Upper torque limit
- r1539 Lower torque limit

This means that these cyclic values limit the torque setpoint at the speed controller output/torque input and indicate the instantaneously maximum possible torque. If the torque setpoint is limited in the inverter, then this is displayed using the following diagnostic parameters

- r1407 bit 08 Upper torque limit active
- r1407 bit 09 Lower torque limit active

Torque limiting

The value specifies the maximum permissible torque whereby different limits are parametrizable for motoring and regenerative operation.

- P1520 CO: Upper torque limit value
- P1521 CO: Lower torque limit value
- P1522 CI: Upper torque limit value
- P1523 CI: Lower torque limit value
- P1525 Scaling, lower torque limit value

The currently active torque limit values are displayed in the following parameters:

- r1526 CO: Upper torque limit value
- r1527 CO: Lower torque limit value

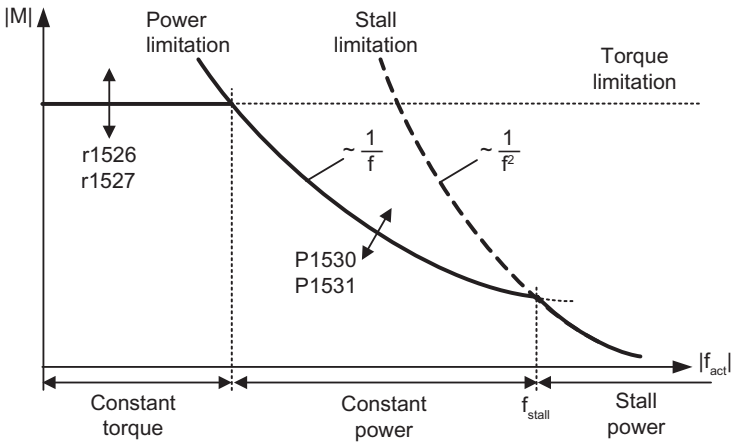

Figure 6-48 Torque limits

Power limits

This value specifies the maximum permissible power, whereby different limits can be parameterized for motoring and regenerative operation.

- P1530 Motor power limit
- P1531 Regenerative power limit

Stall limiting

The stall limiting (locked rotor limiting) is internally calculated for the drive from the motor data.

Current limiting

The current limiting additionally limits the maximum torque which the motor can provide. If the torque limit is increased, more torque is only available if a higher current can flow. It may be necessary to also adapt the current limit. The current limiting is influenced by:

- P0640
- Thermal motor protection
- Thermal inverter protection

After limiting, the instantaneous maximum possible inverter current is displayed in parameter r0067 (limited output current).

Input values

Table 6-50 Main function parameters

Parameter	Description	Setting
P0640 = …	**Motor overload factor [%]** 10 ... 400 %, default 200 %: Defines motor overload current limit relative to rated motor current (P0305)	
P1530 = …	**Motoring power limitation** 0 ... 8000 N, default 0.75 N: Defines fixed value for the max. permissible motoring active power (motoring power limitaton)	
P1531 = …	**Regenerative power limitation** -8000 ... 0 N, default -0.75 N: Enters fixed value for the max. permissible regenerative active power (regenerative power limitation)	

Table 6-51 Additional commissioning parameters

Parameter	Description	Setting
P1520 = …	**Upper torque limit** -99999 ... 99999 Nm, default 5.13 Nm	
P1521 = …	**Lower torque limit** -99999 ... 99999 Nm, default -5.13 Nm	
P1522 = …	**Upper torque limit** Selects source of upper torque limitation: default 1520	
P1523 = …	**Lower torque limit** Selects source of lower torque limitation: default 1521	
P1525 = …	**Scaling lower torque limit** -400 ... 400 %, default 100 %	

Output value

r0067	**Act. Output current limit**
r1407 bit 8	**Status 2 of motor control - Upper torque limit active**
r1407 bit 9	**Status 2 of motor control - Lower torque limit active**

Functions only available with G120 inverters 7

7.1 2-/3-Wire Control

Data

Parameter range:	P0727 P0701 … P0713 P0840, P0842, P1113
Warnings:	-
Faults:	-
Function chart number:	-

Description

2-/3-wire control allows to start, stop and reverse the inverter in one of the following ways:

1. 2-wire control with Siemens standard control
   using ON/OFF1 and REV as permanent signals
2. 2-wire control with Siemens standard control
   using ON/OFF1 and ON_REV/OFF1 as permanent signals
3. 2-wire control
   using ON_FWD and ON_REV as permanent signals
4. 3-wire control
   using STOP as permanent signal, FWD and REVP as pulses
5. 3 wire control
   using OFF1/HOLD and REV as permanent signal, ON as pulse signal

The different types of 2-/3-wire control have to be established via P0727. A detailed description is given in the following section. The signal source can be set via the parameters P0840, P0842 and P1113.

Note

Automatic restart function

When a 2-/3-wire control methods is selected via P0727, the automatic restart function (P1210) is disabled. If the automatic restarted function is required, the user must specifically enable this function. For further details, please see the Parameter Manual.

When any of the control functions are selected using P0727, the values 1, 2 and 12 for the digital inputs (P0701 … and P0712, P0713 for AI used as DI) are redefined as shown in the table below.

Table 7-1 Redefined values of digital inputs

	P0727 = 0 Siemens Standard	P0727 = 1 2-wire control	P0727 = 2 3-wire control	P0727 = 3 3-wire control
Value 1 of digital input meaning of P0840	ON/OFF1	ON_FWD	STOP	ON_PULSE
Value 2 of digital input meaning of P0842	ON_REV/OFF1	ON_REV	FWDP	OFF1/HOLD
Value 3 of digital input meaning of P1113	REV	REV	REVP	REV
"P" denotes "Pulse"; "FWD" denotes "Forward"; "REV" denotes "Reverse"				

Command sources for 2-/3-wire control

To use the 2-/3-wire control the sources for ON/OFF1 (P0840), ON_REV/OFF1 (P0842) and REV (P1113) respective the redefined values have to be set accordingly.

Input values

Table 7-2 Main function parameters

Parameter	Description	Setting
P0727 = …	Selection of 2/3-wire method 0: Siemens (start/dir) - (Method 1 and Method 2) 1: 2-wire (fwd/rev) - (Method 3) 2: 3-wire (fwd/rev) - (Method 4) 3: 3-wire (start/dir) - (Method 5)	
P0840 = …	ON/OFF1 command source possible sources: 722.0 (DI0) default, or any binary output parameter (BO).	
P0842 = …	ON reverse/OFF1 command source possible sources: 722.x (DIx), or any binary output parameter (BO).	
P1113 = …	REV command source possible sources: 722.1 (DI1) default, or any binary output parameter (BO).	

7.1.1 Siemens standard control (P0727 = 0)

Description

With the default settings (P0727 = 0) the following variants of 2-wire control are available:

1. ON/OFF1 and REV.
2. ON/OFF1 and ON_REV/OFF1.

ON/OFF1 and REV

This method allows the inverter to be started and stopped using the ON/OFF1 command and the direction of the inverter changed using the REV command. These commands can be assigned to any of the digital inputs through parameters P0701 … P0709 (and P0712, P0713 for AI used as DI) or BICO connections.

The REV commands can be given at any time, independent of the frequency output of the inverter.

Function

On receiving an ON/OFF1 command the inverter will run the motor in a forward direction and ramp-up the motor to the frequency setpoint.

When a REV command is issued, the inverter will ramp-down the frequency through 0 Hz and run the motor in the reverse direction. When the REV command is removed the inverter will ramp-up through 0 Hz and run in a forward direction until the frequency setpoint is reach.

When the ON/OFF1 command is removed, the inverter will stop the motor by performing an OFF1.

The REV command initiated by itself cannot start the motor.

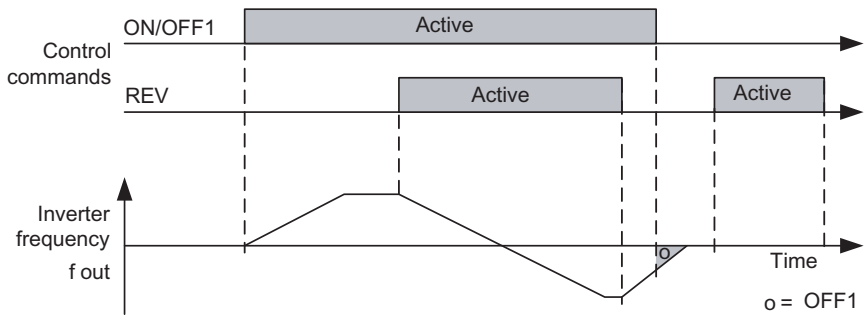

Figure 7-1 Siemens standard control using ON/OFF1 and REV

ON/OFF1 and ON_REV/OFF1

This method allows the inverter to run the motor in a forward direction (run right) using the ON/OFF1 command and in the opposite direction (run left) using the ON_REV/OFF1.

However, for a direction reversal the drive will first have to decelerate with OFF1 and when reaching 0 Hz the reverse signal can be applied.

Function

The ramp down phase can be interrupted by start command in the same direction: if the drive was operating in forward and OFF1 was applied, an ON/OFF1 will work correctly and accelerate again the drive up to the setpoint speed. The same is valid for reverse and ON_REV/OFF1

Giving a start command for the opposite direction of which the inverter frequency output is ramping down, the drive ignores the new setting and the drive will ramp down to 0 Hz and then remain at standstill.

Without any control signal enabled the drive will ramp down to a stop and remain at standstill.

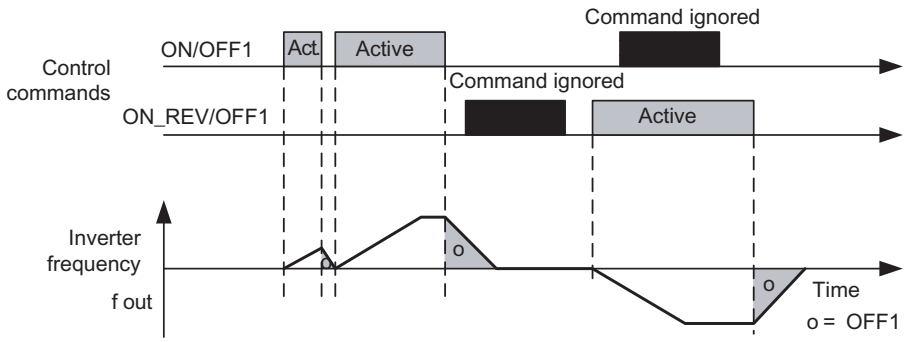

Figure 7-2 Siemens standard control using ON/OFF1 and ON_REV/OFF1

2-wire control using ON/OFF1 and REV as permanent signals (P0727 = 0, Siemens standard)

ON/OFF1	REV	Function
0	0	Inverter ramps down to standstill with OFF1 from any frequency
0	1	Inverter ramps down to standstill with OFF1 from any frequency
1	0	Inverter accelerates to setpoint
1	1	Inverter accelerates to inverse setpoint

2-wire control using ON/OFF1 and ON_REV/OFF1 as permanent signals (P0727 = 0, Siemens standard)

ON/OFF1	ON_REV/ OFF1	Function
0	0	Inverter ramps down to standstill with OFF1 from any frequency (a signal, set while the inverter ramps down, will be ignored)
0	1	Inverter accelerates to inverse setpoint
1	0	Inverter accelerates to setpoint
1	1	First active signal has priority, second signal is ignored

7.1.2 2-wire control (P0727 = 1)

Description

This method uses two permanent signals, ON_FWD and ON_REV which start/stop the inverter and determine the direction of the motor.

The advantage of this method of control is that ON_FWD and ON_REV can be switched at any time, independently of the setpoint or frequency output or direction of rotation, and there is no requirement of the motor to ramp-down to 0 Hz before the command is performed.

Function

With a permanent ON_FWD signal, the drive is ON and runs in forward direction.

With a permanent ON_REV signal, the drive is ON and runs in reverse direction.

If both signals are active simultaneously, the drive will perform an OFF1 and ramp down to standstill.

If both signals are disabled the drive is in OFF1 state.

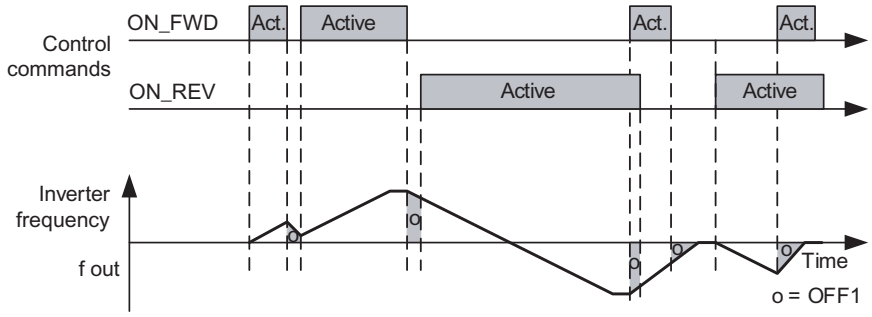

Figure 7-3 2-wire control using ON_FWD and ON_REV

2-wire controlusing ON_FWD and ON_REV as permanent signals (P0727 = 1)

ON_FWD	ON_REV	Function
0	0	Inverter ramps down to standstill with OFF1 from any frequency
0	1	Inverter accelerates to inverse setpoint
1	0	Inverter accelerates to setpoint
1	1	Inverter ramps down to standstill with OFF1 from any frequency

7.1.3 3-wire control (P0727 = 2)

Description

This method uses three commands to control the operation of the motor:

1. STOP: This signal is permanently necessary to start the motor via FWDP or REVP.
2. FWDP: Causes the motor to run in a forward direction (run right).
3. REVP: Causes the motor to run in the reverse direction (run left).

Function

The STOP signal uses negative logic: Opening the contact or maintaining it open causes an OFF1 condition and the drive stops. The STOP contact will need to be maintained closed to start and run the inverter.

Then a positive edge of the FWDP or REVP contact latches and starts the inverter.

A positive edge of the FWDP contact will set the forward direction.

A positive edge of the REVP contact will change to the reverse direction.

FWDP and REVP closed simultaneously will cause an OFF1.

The ramp down can be interrupted by a single new pulse FWDP or REVP.

A positive edge of the FWDP or REVP contacts while the drive is operating in the respective direction will not cause any change.

Only by opening the STOP contact the drive will switch off regularly, apart from the special case that both signals FWDP and REVP are present.

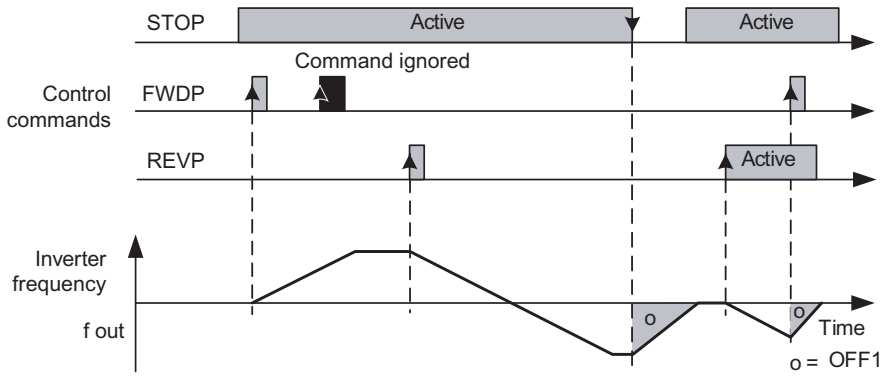

Figure 7-4 3-wire control using FWDP, REVP and STOP

3-wire control using STOP as permanent signal, FWD and REVP as pulses (P0727 = 2)

STOP	FWDP	REVP	Function
0	0/1	0/1	Inverter ramps down to standstill with OFF1 from any frequency
1	0	0	Inverter operates according the previous set pulse (FWDP/REVP)
1	0	1	Inverter accelerates to inverse setpoint
1	1	0	Inverter accelerates to setpoint
1	1	1	Inverter ramps down to standstill with OFF1 from any frequency

7.1.4 3-wire control (P0727 = 3)

Description

There are three signals associated with this function:

ON_PULSE:	Causes the motor to run in a forward direction if OFF1/HOLD is active.
OFF1/HOLD:	This signal needs to be permanently active to start the motor via an ON_PULSE. Opening of the contact causes the motor to stop with OFF1.
REV:	This signal causes the motor to change to reverse direction if OFF1/HOLD and ON_PULSE are active.

Function

The switch OFF1/HOLD uses negative logic: the contact will need to be maintained closed in order to switch the inverter ON or keep it running.

A positive edge of the ON_PULSE switch latches and starts the inverter if it was OFF before.

The direction can be determined and changed at any time using the REV signal The REV signal needs to be permanently active.

Opening or closing the ON_PULSE switch while the drive runs has no effect.

Only enabling (e.g. Opening) OFF1/HOLD will unlatch the run-state and then stop the inverter.

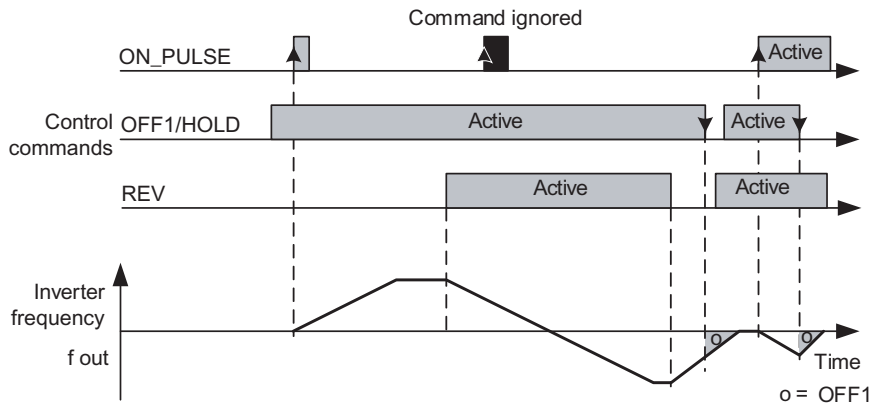

Figure 7-5 3-wire control using ON_PULSE, OFF1/HOLD and REV

3-wire control using STOP as permanent signal, FWD and REVP as pulses (P0727 = 3)

OFF1/ HOLD	ON_ PULSE	REV	Function
0	0/1	0/1	Inverter ramps down to standstill with OFF1 from any frequency
1	0	0	Inverter ramps down to standstill with OFF1 from any frequency
1	0	1	Inverter ramps down to standstill with OFF1 from any frequency
1	1	0	Inverter accelerates to setpoint
1	1	1	Inverter accelerates to inverse setpoint

7.2 Setpoint via Fixed Frequencies

Data

Parameter range:	P1001 - r1025
Warnings:	-
Faults:	-
Function chart number:	FP3200, FP3210

Description

The fixed frequency functionality allows entering a frequency setpoint to the drive. It can be selected using the Fixed Frequencies (P1001 … P1101) or using the PID Fixed Frequencies (P2201 … P2223), see section "Setpoint via PID Fixed Frequencies".

This is an alternative method of entering a setpoint instead of using the analog inputs, the serial communications interface, the JOG function or a motorized potentiometer.

There are two modes to select fixed frequencies, which are set via the parameter P1016:

- Direct selection (P1016 = 1)
- Binary selection (P1016 = 2)

ON command combined with fixed frequency

The fixed frequency status bit r1025 (binector output) allows to combine the fixed frequency selection with an ON command. For this, P0840 must be set to r1025.

⚠ CAUTION
Please note that the meaning of P0840 may change with using the 2-/3-wire control functionality.

When using digital inputs the signal source can be selected using one of the following methods:

- Standard method (default)
- BICO method

Note

The standard method has priority over the BICO method. This means the digital inputs DI3 … DI6 must be set to another value than 15, 16, 17, 18 before BICO connection can be performed.

Direct selection (P1016 = 1)

With the default settings, in this mode, the fixed frequency can be selected using permanent signals for the fixed frequency sources, selected using P1020 ... P1023 (default DI3 ... DI6). If several fixed frequencies are active simultaneously, the frequencies are added together. This means if DI3, DI4 and DI6 are active then the resultant frequency is FF1+FF2+FF4. This allows up to 15 combinations for the selection of fixed frequencies.

The values for the FF1 … FF4 are given in P1001 … P1004.

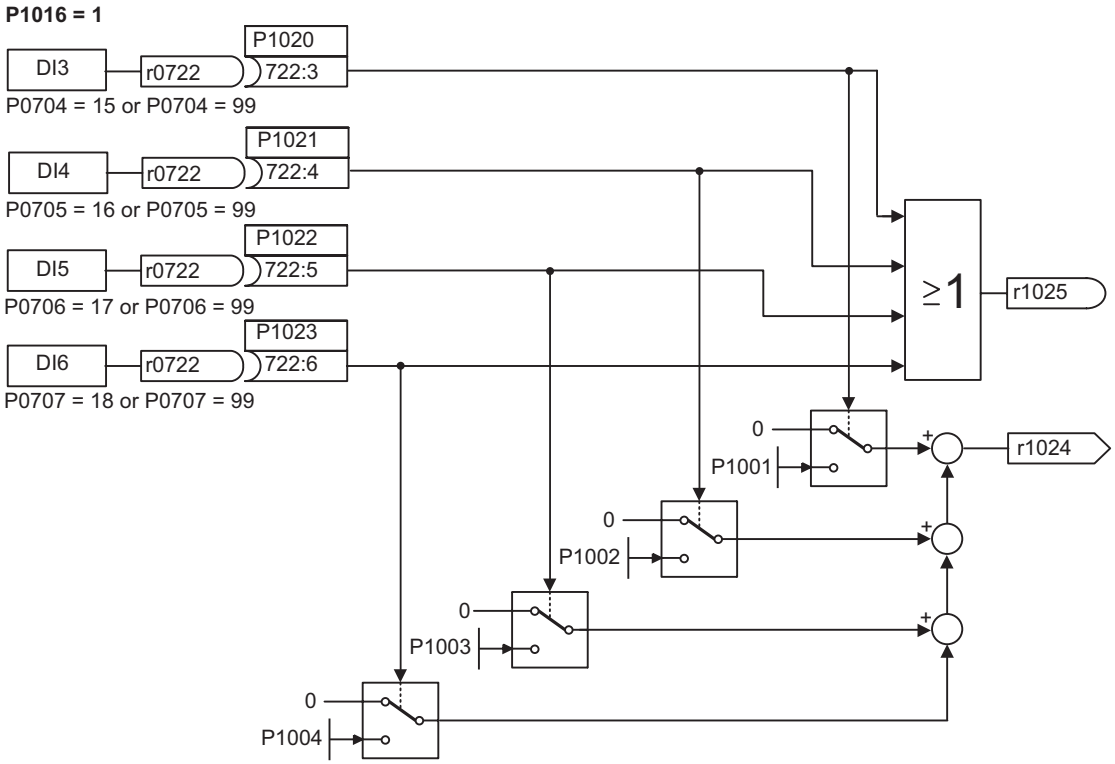

Figure 7-6 Direct selection of fixed frequencies - functional overview

Binary-coded selection (P1016 = 2)

Using this technique up to 15 different fixed frequencies can be selected using permanent signals for the fixed frequency sources, selected using P1020 … P1023. The frequencies are indirectly selected using the binary coding of the status of the fixed frequency sources as shown in the table below.

Table 7-3 Example of selecting fixed frequencies using binary

FF number	Frequency	P1023	P1022	P1021	P1020
FF1	P1001	0	0	0	1
FF2	P1002	0	0	1	0
FF3	P1003	0	0	1	1
FF4	P1004	0	1	0	0
…	…	…	…	…	…
FF14	P1014	1	1	1	0
FF15	P1015	1	1	1	1

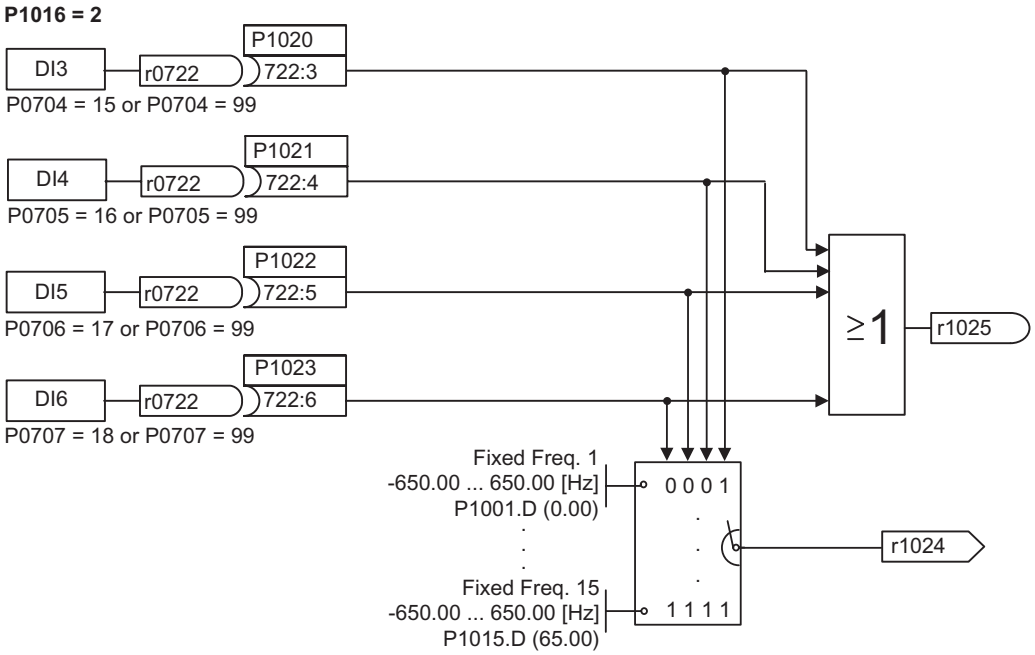

Figure 7-7 Binary selection of fixed frequencies - functional overview

Input values

Parameter	Description	Setting
Select source for fixed frequency selection, e.g. digital inputs (P0722.x) or any binary output parameter (BO).		
P1001 - P1015 = …	**Fixed frequency 1 - 15** possible values: - 650 Hz … 650 Hz, default settings 0 Hz … 65 Hz in 5 Hz-steps	
P1016 = …	**Fixed frequency mode** 1 direct selection (default), 2 binary-coded selection	
P1020 = …	**Fixed freq. Selection Bit 0** e.g 722.x (digital inputs) / r2091.00 (serial interface)	
P1021 = …	**Fixed freq. Selection Bit 1** e.g 722.x (digital inputs) / r2091.01 (serial interface)	
P1022 = …	**Fixed freq. Selection Bit 2** e.g 722.x (digital inputs) / r2091.02 (serial interface)	
P1023 = …	**Fixed freq. Selection Bit 3** e.g 722.x (digital inputs) / r2091.03 (serial interface)	

Output values

Parameter	Description	Setting
r1024	**Actual fixed frequency** P1016 = 0: Sum of selected fixed frequencies P1016 = 1: Fixed frequency of binary-coded value	
r1025	**Fixed frequency status** 0 = no fixed frequency selected 1 = at least one fixed frequency selected	

Examples via digital inputs or serial interface

Table 7-4 Selection of fixed frequencies with direct selection (P1016 = 0)

Method	Input settings

Standard method - using digital inputs	P0704 = 15: DI3 as source for FF selection Bit 0 (P1020)
	P0705 = 16: DI4 as source for FF selection Bit 1(P1021)
	P0706 = 17: DI5 as source for FF selection Bit 2 (P1022)
	P0707 = 18: DI5 as source for FF selection Bit 3 (P1023)
	P1020 = 722.3: FF selector Bit 0 (DI3) // P1021 = 722.4: FF selector Bit 1 (DI4)
	P1022 = 722.5: FF selector Bit 2 (DI5) // P1021 = 722.4: FF selector Bit 3 (DI6)

BICO method - using serial interface	P0704 - P0707 ≠ 15, 16, 17, 18, BICO parameterization enabled, P1020 = 2091.0: FF selector Bit 0 -> serial interface control word 2, Bit 0 , P1021 = 2091.1: FF selector Bit 1 -> serial interface control word 2, Bit 1 P1022 = 2091.2: FF selector Bit 2 -> serial interface control word 2, Bit 2 P1023 = 2091.3: FF selector Bit 3 -> serial interface control word 2, Bit 3

7.3 PID Controller

Data

Parameter range:	P2200, P2201 … P2355
Warnings:	A0936
Faults:	F0221, F0222
Function chart number:	FP3300, FP3310, FP3400, FP5000, FP5100
Features:	cycle time: 8 ms

Description

The integrated PID controller (technology controller) calculates a frequency setpoint that can be used to control process quantities such as pressure or level. The setpoint can be used as main setpoint or as additional setpoint.

As main setpoint it can be used for the following applications:

- Closed-loop pressure control for extruders
- Closed-loop water level control for pump motors
- Closed-loop temperature control for fan motors.

As additional setpoint the following applications are possible:

- Closed-loop dancer roll position control for winder applications and similar control tasks.

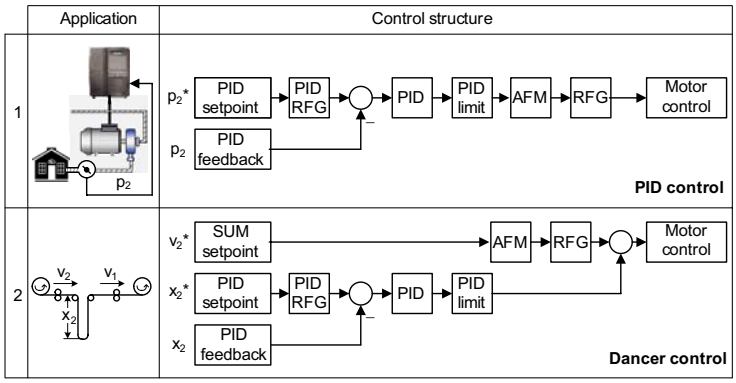

		Setpoint via SUM	Setpoint via PID controller	RFG	PID-RFG
1	**P2200 = 1:0** [1] **P2251 = 0**	—	PID control	ON: - OFF1/3: active	ON: active OFF1/3: -
2	**P2200 = 1:0** [2] **P2251 = 1**	Dancer control		ON: active OFF1/3: active	ON: active OFF1/3: active

1) change only taken when drive stopped
2) will take change with drive running

Figure 7-8 PID application examples

The technology controller setpoints and actual values can be entered using the PID motorized potentiometer (PID-MOP), PID fixed setpoint (PID-FF), analog inputs (AI) or through the serial interface as shown in the figure below. The appropriate parameterization of the BICO parameter defines which setpoints or actual values are to be used.

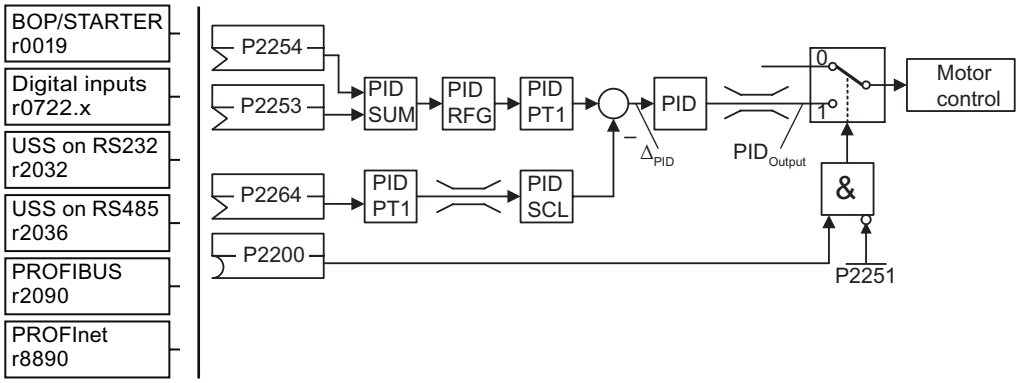

Figure 7-9 Structure of the technology controller

Input values

Table 7-5 Main function parameters

Parameter	Description	Setting
P2200 = …	**Enable PID controller** 0: disabled (default) 1: enabled	
P2235 = …	**Enable PID-MOP (UP-cmd)** possible sources: 19.13 (BOP), 722.x (Digital Input), 2032.13 (USS on RS232), 2036.13 (USS on RS485), 2090.13 (PROFIBUS), r8890.13 (PROFInet)	
P2236 = …	**Enable PID-MOP (DOWN-cmd)** possible sources: 19.14 (BOP), 722.x (Digital Input), 2032.14 (USS on RS232), 2036.14 (USS on RS485), 2090.14 (PROFIBUS), 8890.14 (PROFInet)	

Table 7-6 Additional commissioning parameters

Parameter	Description	Setting
P2251 = …	**PID mode** 0: PID as setpoint (default) 1: PID as trim source	
P2253 = …	**PID setpoint** possible sources: 755.0 (Analog input 0), 2224 (Act. fixed PID setpoint), 2250 (Output setpoint of PID-MOP)	
P2254 = …	**PID trim source** possible sources: 755.0 (Analog input 0), 2224 (Act. fixed PID setpoint), 2250 (Output setpoint of PID-MOP)	
P2255 = …	**PID setpoint gain factor** 0 … 100, default 100	
P2256 = …	**PID trim gain factor** 0 … 100, default 100	
P2257 = …	**Ramp-up time for PID setpoint** 0 … 650 s , default 1 s	
P2258 = …	**Ramp-down time for PID setpoint** 0 … 650 s, default 1 s	

Parameter	Description	Setting
P2263 = …	**PID controller type** 0: D component on feedback signal (default) 1: D component on error signal	
P2264 = …	**PID feedback** possible sources: 755.1 (Analog input 1), 2224 (Act. fixed PID setpoint), 2250 (Output setpoint of PID-MOP)	
P2265 = …	**PID feedback filter timeconstant** 0 … 60 s, default 0 s	
P2267 = …	**Max. value for PID feedback** -200 … 200 %, default 100 %	
P2268 = …	**Min. value for PID feedback** -200 … 200 %, default 100 %	
P2269 = …	**Gain applied to PID feedback** 0 … 500 %, default 100 %	
P2270 = …	**PID feedback function selector** 0: Disabled (default) 1: Square root 2: Square 3: Cube	
P2271 = …	**PID transducer type** 0: Disabled (default) 1: Inversion of PID feedback signal	
P2274 = …	**PID derivative time** 0 … 60 s, default 0 s	
P2280 = …	**PID proportional gain** 0 … 65, default 3	
P2285 = …	**PID integral time** 0 … 60 s, default 0 s	
P2291 = …	**PID output upper limit** -200 … 200 %, default 100 %	
P2292 = …	**PID output lower limit** -200 … 200 %, default 0 %	
P2293 = …	**Ramp-up/-down time of PID limit** 0 … 100 s, default 1 s	
P2295 = …	**Gain applied to PID output** -100 … 100 %, default 100 %	
P2350 = …	**PID autotune enable** 0: PID autotuning disabled (default) 1: PID autotuning via Ziegler Nichols (ZN) standard 2: PID autotuning as 1 plus some overshoot (O/S) 3: PID autotuning as 2 little or no overshoot (O/S) 4: PID autotuning PI only, quarter damped response	
P2354 = …	**PID tuning timeout length** 60 … 65000 s, default 240 s	
P2355 = …	**PID tuning offset** 0 … 20 s, default 5 s	

Output value

r2224	Act. fixed PID setpoint
r2225	PID Fixed frequency status
r2250	Output setpoint of PID-MOP
r2260	PID setpoint after PID-RFG
P2261	PID setpoint filter timeconstant
r2262	Filtered PID setp. after RFG
r2266	PID filtered feedback
r2272	PID scaled feedback
r2273	PID error
r2294	Act. PID output

Example

Permanent PID controller should fulfill the following secondary conditions:

- PID controller enabled and
- PID setpoint input via PID fixed frequencies and
- PID actual value via the analog input.

Table 7-7 Parameterization

Permanent PID controller enabled	P2200 = 1.0
Setpoint input via PID-FF	P2253 = 2224
Actual value input via analog input AI	P2264 = 755
Setpoint input via PID	P2251 = 0

The additional setpoint is added to the main setpoint (PID-SUM) and the sum is fed to the setpoint-actual value summation point through the PID ramp-function generator (PID-RFG). The source of the supplementary setpoint (BICO parameter P2254), the ramp-up/ramp-down times of the PID ramp-function generator (P2257, P2258) as well as the filter time (P2261) can be adapted to the particular application by appropriately parametrizing the corresponding parameters.

Similar to the PID setpoint branch, the actual value branch of the technological controller has a filter (PID-PT1) which can be set using parameter P2265. In addition to the smoothing, the actual value can be modified using a scaling unit (PID-SCL).

The technology controller can be parameterized as either P, I, PI or PID controller using parameters P2280, P2285 or P2274.

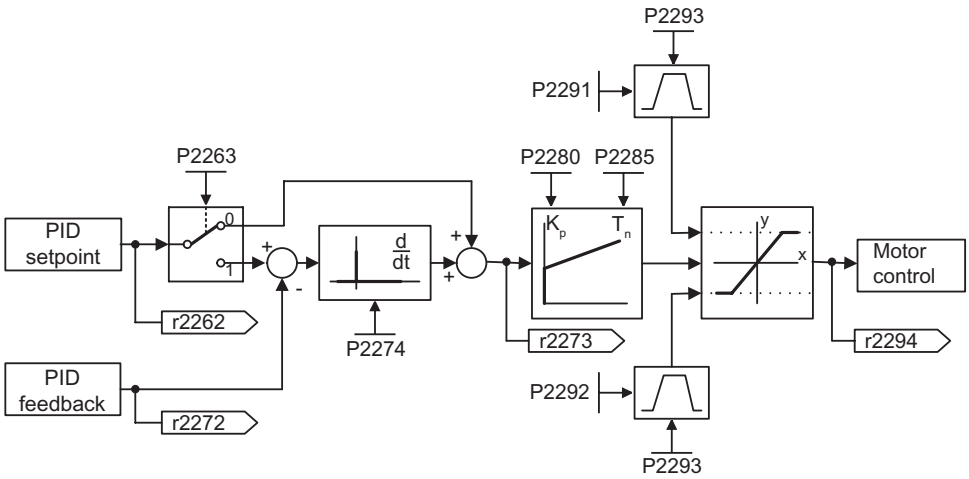

Figure 7-10 PID controller

For specific applications, the PID output quantity can be limited to defined values. This can be achieved using the fixed limits - P2291 and P2292. In order to prevent the PID controller output exercising large steps at power-on, these PID output limits are ramped-up with ramp time P2293 from 0 to the corresponding value P2291 (upper limit for the PID output) and P2292 (lower limit for the PID output). As soon as these limits have been reached, the dynamic response of the PID controller is no longer limited by this ramp-up/ramp-down time (P2293).

7.3.1 PID dancer roll control

Data

Parameter range:	P1070, P1075, P1120, P1121, P2200, P2251 … P2285
Warnings:	-
Fault:	-
Function chart number:	-

Description

For various continuous production processes, for example, in the paper and pulp industry or in the manufacture of cables, it is necessary to control (closed-loop) the velocity of stations along the production process to ensure the continuous material web is not subject to any unwanted tension levels. It is important that no folds or creases are formed. For applications such as these, it is practical to provide a type of material buffer in the form of a loop with a defined tension. This provides a de-coupling between the individual inverter locations. This loop represents the difference between the material fed-in and that fed-out and therefore indicates the process quality.

Using the PID dancer roll control, with inverter it is possible to ensure that continuous material webs have a constant tension.

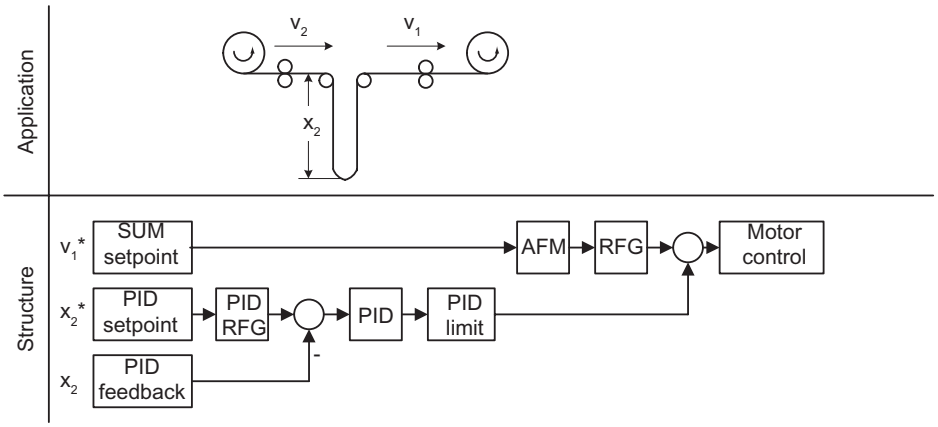

Figure 7-11 PID dancer roll control

The velocity v_1 is assumed to be an independent disturbance; the input velocity v_2 should be controlled using motor rolls A_2 so that the length x_2 of the loop corresponds, as far as possible, to the setpoint.

Note

When selecting the closed-loop dancer roll control it should be noted that neither PID-MOP nor PID-FF should be used - but instead the MOP (motorized potentiometer) or the FF (fixed frequencies).

The structure and important parameters for the PID dancer roll control are shown below.

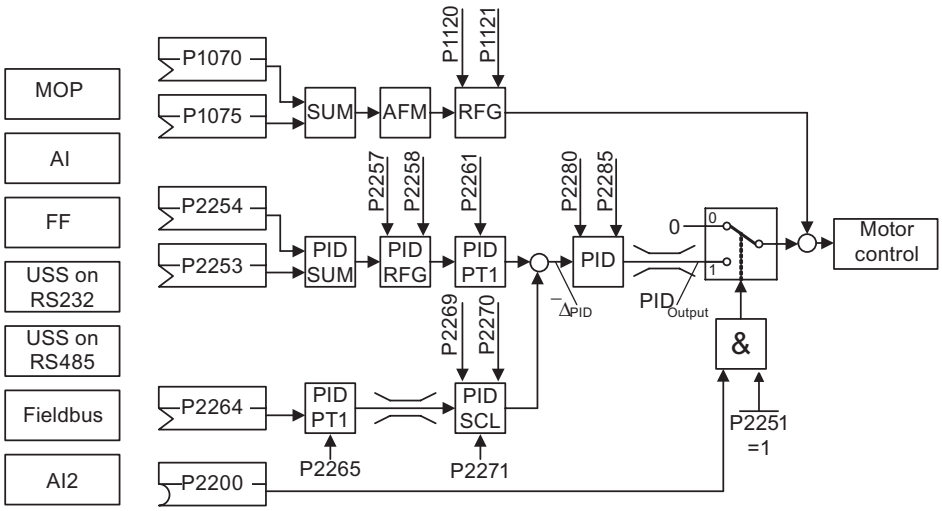

Figure 7-12 Structure of the closed-loop PID dancer roll control

Input values

Table 7-8 Main function parameters

Parameter	Description	Setting
P1070 = …	**Main setpoint** 1024: Fixed setpoint (FF) 1050: MOP 755.0: Analog input 0 2015.1: USS on RS232 2018.1: USS on RS485 2050.1: Fieldbus (default)	
P1074 = …	**Disable additional setpoint** possible sources: P755.x (Digital input)	
P1120 = …	**Ramp-up time** 0 … 650 s, default 10 s	
P1121 = …	**Ramp-down time** 0 … 650 s, default 10 s	
P2200 = …	**Enable PID controller** 1: PID controller always active 722.x: Digital input x	
P2251 = …	**PID mode** 0: PID as setpoint (default) 1: PID as trim	
P2253 = …	**PID setpoint** possible sources: P755.0 (Analog input 0) / r2224 (Fixed setpoint) / r2250 (active setpoint)	
P2254 = …	**PID trim source** possible sources: P755.0 (Analog input 0) / r2224 (Fixed setpoint) / r2250 (active setpoint)	
P2264 = …	**PID feedback** possible sources: P755.1 (Analog input 1) / r2224 (Fixed setpoint) / r2250 (active setpoint)	

Table 7-9 Additional commissioning parameters

Parameter	Description	Setting
P2255 = …	**PID setpoint gain factor** 0 … 100, default 100	
P2256 = …	**PID trim gain factor** 0 … 100, default 100	
P2265 = …	**PID feedback filter timeconstant** 0 … 60 s, default 0 s	
P2271 = …	**PID transducer type** 0: Disabled (default) 1: Inversion of PID feedback signal	
P2280 = …	**PID proportional gain** 0 … 65, default 3	
P2285 = …	**PID integral time** 0 … 60 s, default 0 s	

Output value

Parameter	Description	Setting
r2260	CO: PID setpoint after PID-RFG	
P2261	PID setpoint filter timeconstant	
r2262	CO: Filtered PID setp. after RFG	
r2266	CO: PID filtered feedback	
r2272	CO: PID scaled feedback	
r2273	CO: PID error	

Additional parameters regarding the PID controller function

Parameter	Description	Setting
P2257 = …	Ramp-up time for PID setpoint 0 … 650 s, default 1 s	
P2258 = …	Ramp-down time for PID setpoint 0 … 650 s, default 1 s	
P2263 = …	PID controller type 0: D component on feedback signal (default) 1: D component on error signal	
P2267 = …	Max. value for PID feedback -200 … 200 %, default 100 %	
P2268 = …	Min. value for PID feedback -200 … 200 %, default 100 %	
P2269 = …	Gain applied to PID feedback 0 … 500 %, default 100 %	
P2270 = …	PID feedback function selector 0: Disabled (default) 1: Square root 2: Square 3: Cube	
P2274 = …	PID derivative time 0 … 60 s, default 0 s	

7.3.2 PID Motorized Potentiometer

Data

Parameter range:	P2231 … r2250
Warnings:	-
Faults:	-
Function chart number:	FP3400

Description

The PID controller has a PID motorized potentiometer (PID-MOP) which can be separately adjusted. Its functionality is identical with the motorized potentiometer, whereby the PID parameters are set in the range from P2231 … r2250.

Table 7-10 Correspondence between the parameters

PID motorized potentiometer		Motorized potentiometer	
P2231	PID-MOP mode	P1031	MOP mode
P2232	Inhibit rev. direct. of PID-MOP	P1032	Inhibit reverse direction of MOP
P2235	Enable PID-MOP (UP-cmd)	P1035	Enable MOP (UP-command)
P2236	Enable PID-MOP (DOWN-cmd)	P1036	Enable MOP (DOWN-command)
P2240	Setpoint of PID-MOP	P1040	Setpoint of the MOP
P2241	PID-MOP select set point automatically/manually	P1041	MOP select set point automatically/manually
P2242	PID-MOP auto setpoint	P1042	MOP auto setpoint
P2243	BI: PID-MOP accept ramp generator setpoint	P1043	MOP accept ramp generator setpoint
P2244	PID-MOP ramp generator setpoint	P1044	MOP ramp generator setpoint
P2247	PID-MOP ramp up time (acceleration time) of the rfg	P1047	MOP ramp up time (acceleration time) of the rfg
P2248	PID-MOP ramp down time (acceleration time) of the rfg	P1048	MOP ramp down time (acceleration time) of the rfg
r2245	PID-MOP input frequency of the ramp generator	r1045	MOP input frequency of the ramp generator
r2250	Output setpoint of PID-MOP	r1050	Act. Output freq. of the MOP

Note

Differences between MOP and PID-MOP:

The MOP setpoint is given as a frequency value (default 5 Hz), the PID MOP setpoint as a percentage of the reference parameters P2000 … P2004 (default 10 %).

The MOP command source can be changed via P0700. The PID-MOP can only be changed via BICO signals.

Examples

Table 7-11 PID-MOP setpoint sources

Function	Source		
	Option port, e.g. BOP	PROFIBUS	Digital inputs
P2235 Enable PID-MOP UP	= 19.13	= r2090.13	= 722.4 (DI4)
P2236 Enable PID-MOP DOWN	= 19.14	= r2090.14	= 722.5 (DI5)

See also

Motorized Potentiometer (MOP) (Page 36)

7.3.3 Setpoint via PID Fixed Frequencies

Data

Parameter range:	P2201 … r2225
Warnings:	-
Faults :	-
Function chart number:	FP3300, FP3310

Description

The functionality of the PID fixed frequencies is identical with the function "setpoint via fixed frequencies".

The use of the Fixed Frequencies and PID Fixed Frequency at the same time is not possible.

Table 7-12 Correspondence between the parameters

PID fixed frequencies		Fixed frequencies	
P2201 - P2215	Fixed PID setpoint 1 - 15	P1001 - P1015	Fixed frequency 1 - 15
P2216	Fixed PID setpoint mode	P1016	Fixed frequency mode
P2220	Fixed PID setp. select Bit 0	P1020	Fixed freq. Selection Bit 0
P2221	Fixed PID setp. select Bit 1	P1021	Fixed freq. Selection Bit 1
P2222	Fixed PID setp. select Bit 2	P1022	Fixed freq. Selection Bit 2
P2223	Fixed PID setp. select Bit 3	P1023	Fixed freq. Selection Bit 3
r2224	Act. fixed PID setpoint	r1024	Actual fixed frequency
r2225	PID Fixed frequency status	r1025	Fixed frequency status

Input values

Table 7-13 Main function parameters

Parameter	Description	Setting
P2201 - P2215 = …	**Fixed PID setpoint 1 - 15** -200 … 200 Hz: Defines Fixed PID setpoint 1 - 15 (0% = default)	
P2216 = …	**Fixed PID setpoint mode** 1 direct selection (default) 2 binary selection	
P2220 = …	**Fixed PID setp. select Bit 0** possible sources: 722.x (digital inputs) / 2033.00 (option port) / r2091.00 (serial interface) (722.3 = default)	
P2221 = …	**Fixed PID setp. select Bit 1** possible sources: 722.x (digital inputs) / 2033.01 (option port) / r2091.01 (serial interface) (722.4 = default)	
P2222 = …	**Fixed PID setp. select Bit 2** possible sources: 722.x (digital inputs) / 2033.02 (option port) / r2091.02 (serial interface) (722.5 = default)	
P2223 = …	**Fixed PID setp. select Bit 3** possible sources: 722.x (digital inputs) / 2033.03 (option port) / r2091.03 (serial interface) (722.6 = default)	

Output value

Parameter	Description	Setting
r2224	**Act. fixed PID setpoint** P1016 = 0: Sum of selected fixed frequencies P1016 = 1: Fixed frequency of binary-coded value	
r2225	**PID Fixed frequency status** 0 = no fixed frequency selected 1 = at least one fixed frequency selected	

Example direct selection

Table 7-14 Direct selection (P2216 = 1) using digital inputs

FF number	Frequency	P2223	P2222	P2221	P2220
PID-FF0	0 Hz	0	0	0	0
PID-FF1	P2201	0	0	0	1
PID-FF2	P2202	0	0	1	0
PID-FF3	P2203	0	1	0	0
PID-FF4	P2204	1	0	0	0
PID-(FF1+FF2)		0	0	1	1
PID-(FF1+FF2+FF3)		0	1	1	1
PID-(FF1+FF2+FF3+FF4)		1	1	1	1

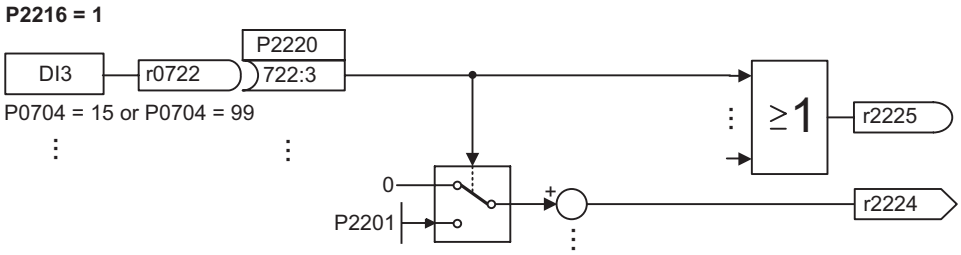

Figure 7-13 Directly selected PID fixed setpoint using DI3

Example binary selection

Table 7-15 Binary selection (P2216 = 2) using digital inputs

FF number	Frequency	P2223	P2222	P2221	P2220
PID-FF0	0 Hz	0	0	0	0
PID-FF1	P2201	0	0	0	1
PID-FF2	P2202	0	0	1	0
…	…	…	…	…	…
PID-FF14	P2214	1	1	1	0
PID-FF15	P2215	1	1	1	1

7.4 Digital inputs (DI)

Data

Quantity:	6 … 9 + 2 (depends on CU variant)
Parameter range:	P0701 … P0712, P0713
	r0720 … P0724
Function chart number:	FP2000, FP2200
Features:	
• cycle time:	2 ms
• switch-on threshold:	≥ 15 V
• switch-off threshold:	≤ 5 V
• electrical features:	G120: electrically isolated, short-circuit proof

Description

External control signals are required for an inverter to be able to operate autonomously. These signals can be entered using a serial interface as well as using digital inputs (see figure below). The SINAMICS G120 has depending on CU variant up to 9 digital inputs which can be expanded by using the 2 analog inputs. The digital inputs can be freely programmed to create a function. Regarding the programming, it is possible to directly assign the function using parameters P0701 … P0713 or to freely program the function using BICO technology.

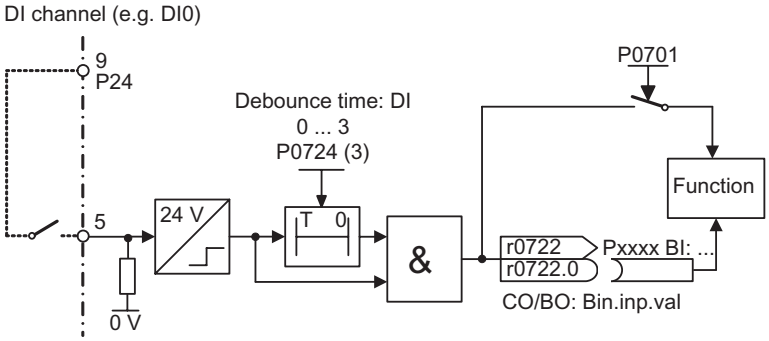

Figure 7-14 Digital inputs

The number of available digital inputs is displayed in parameter r0720. The logical states of the digital inputs can be de-bounced using P0724 and read-out using parameter r0722 (BICO monitoring parameter). Further, this parameter is used for BICO parameterization of the digital inputs (refer to BICO parameterization in the following section).

Digital inputs and analog inputs used as digital inputs

Following digital inputs are available:

- CU240S and CU240S DP: DP P0701 … P0709,
  P0712, P0713 analog inputs used as digital inputs
- CU240S DP-F: DP P0701 … P0706,
  P0712, P0713 analog inputs used as digital inputs

To use P0712 or P0713 as analog input set the parameter value = 0. To use it as digital input, set the parameter according the commands listed in the following table.

Table 7-16 Possible settings of the digital inputs and analog inputs used as digital inputs

Parameter Value	Significance
0	Digital input disabled
1	ON/OFF1
2	ON_REV/OFF1
3	OFF2 – coast to standstill
4	OFF3 – quick ramp-down
9	Fault acknowledge
10	JOG right
11	JOG left
12	Reverse
13	MOP up (increase frequency)
14	MOP down (decrease frequency)
15	Fixed frequency selector Bit 0
16	Fixed frequency selector Bit 1
17	Fixed frequency selector Bit 2
18	Fixed frequency selector Bit 3
25	Enable DC braking
27	Enable PID
29	External trip
33	Disable additional frequency setpoint
99	Enable BICO parameterization

Example

An ON/OFF1 command is to be accomplished using digital input DI0.

- P0700 = 2 Control enabled using the terminal strip (digital inputs)
- P0701 = 1 ON/OFF1 using digital input 0 (DI0).

Note

If an analog input has been configured as a digital input, the following limit values apply:

- Voltage > 4 V = logical 1
- Voltage < 1.6 V = logical 0

BICO parameterization

If the setting 99 (BICO) is entered into parameters P0701 … P07013, then the BICO wiring is enabled for the appropriate digital input. The output parameter number of the function (the parameter, included in the parameter text BO) should be entered into the command source (the parameter which contains the code BI in the parameter text).

Example

A relay is to be controlled directly using DI0.

- P0700 = 2 Control enabled using digital inputs
- P0701 = 99 Enable BICO parameterization on DI0
- P0731[0] = 722.0 Relay 1 controlled directly.

This can be useful when the normal relay functions and digital inputs are not required so the user can use them for their own purposes.

Note

Only experienced users should use the BICO parameterization and for applications where the possibilities provided by P0701 … P07013 are no longer adequate.

If P0701 … P07013 are set to 99, then the command source can only be changed by the use of P0700. For example, changing P0701 from 99 to 1 will not change the command source or alter the existing BICO settings.

7.5 Digital outputs (DO)

Data

Quantity:	3
Parameter range:	r0730 … P0748
Function chart number:	FP2100
Features:	
• cycle time:	10 ms

Description

Three output relays are provided which can be programmed to indicate a variety of states of the inverter, such as faults, warnings, current limit conditions, etc.

Some of the more popular settings are pre-selected (see table below), but others can be allocated using the BICO internal connection feature.

Relay:	
max. opening/closing time:	5/10 ms
voltage/current	30 V DC/0.5 A maximum

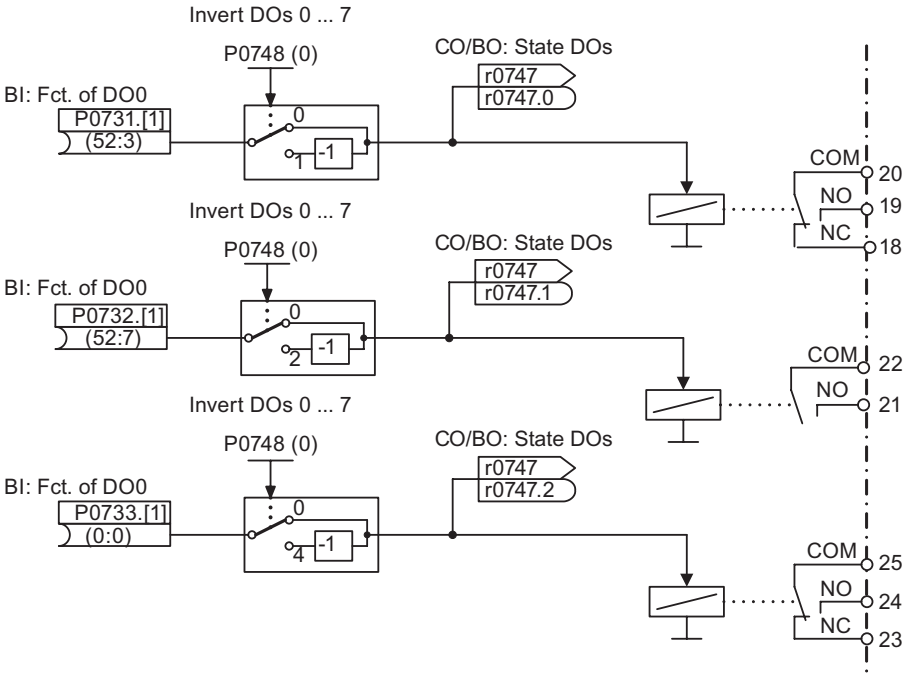

Figure 7-15 Digital outputs

The states, which are to be output, are defined using the "BI" parameters P0731 (digital output 0), P0732 (digital output 1) and P0733 (digital output 2). For the definition, the "BO" parameter number or "CO/BO" parameter number and the bit number of the particular state should be entered into P0731 … P0733. Frequently used states including the parameter number and bit are shown in the table below.

Table 7-17 Parameters P0731 to P0733 (frequently used functions/states)

Parameter value	Significance
52.0	Drive ready
52.1	Drive ready to run
52.2	Drive running
52.3	Drive fault active
52.4	OFF2 active
52.5	OFF3 active
52.6	ON inhibit active
52.7	Drive warning active
52.8	Deviation, setpoint/actual value
52.9	PZD control
52.10	f_act >= P1082 (f_max)
52.11	Warning: Motor current limit
52.12	Brake active
52.13	Motor overload
52.14	Motor runs right
52.15	Inverter overload
53.0	DC brake active
53.1	f_act < P2167 (f_off)
53.2	f_act > P1080 (f_min)
53.3	Actual current r0027 ≥ P2170
53.6	f_act ≥ setpoint (f_set)

Note

On the OP the bit numbers are displayed in hex-format (0..9, A..F).

For complete list of all of the binary status parameters (refer to "CO/BO" parameters) in the Parameter Manual.

7.6 Analog inputs (A/D converter)

Data

Quantity:	2
Parameter range:	P0750 … P0762
Function chart number:	FP2200
Features:	
• cycle time:	4 ms
• resolution:	10 bits
• accuracy:	1 % referred to 10 V / 20 mA
• electrical features:	incorrect polarity protection, short-circuit proof

Description

Analog setpoints, actual values and control signals are read into the inverter using the appropriate analog inputs and are converted into digital signals or values using the A/D converter.

The setting as to whether the analog input is a voltage input (10 V) or a current input (20 mA) must be selected via P0756 and via the DIP switches on the housing of the Control Unit. For failure-free operation, the DIP switches and the P0756 must be set. For details, refer to the Operating Instructions of your inverter.

Note

The bipolar voltage input is only possible with analog input 0 (AI0).

Depending on the AI type or source, the appropriate connection must be made. Using, as an example, the internal 10 V voltage source, a connection is shown in the figure below.

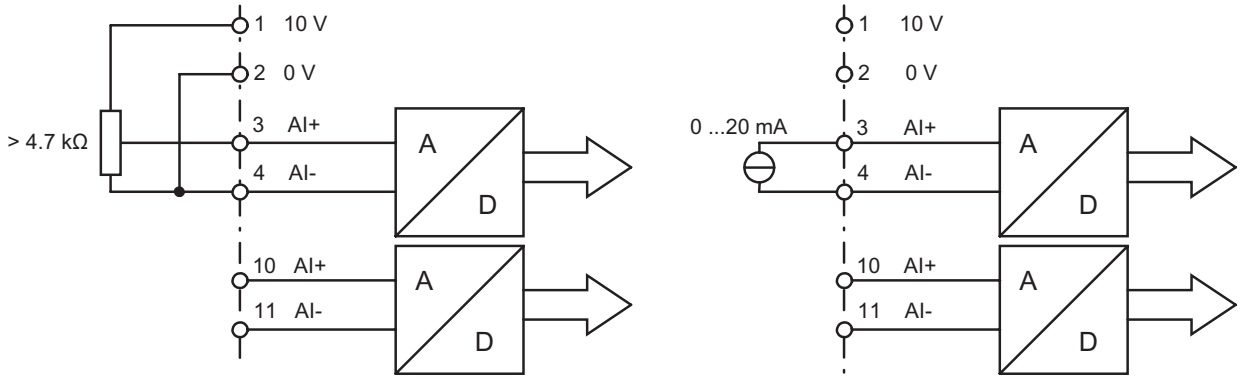

Figure 7-16 Example of a connection for AI voltage and current input

The AI channel has several function units (filter, scaling, dead zone, see figure below).

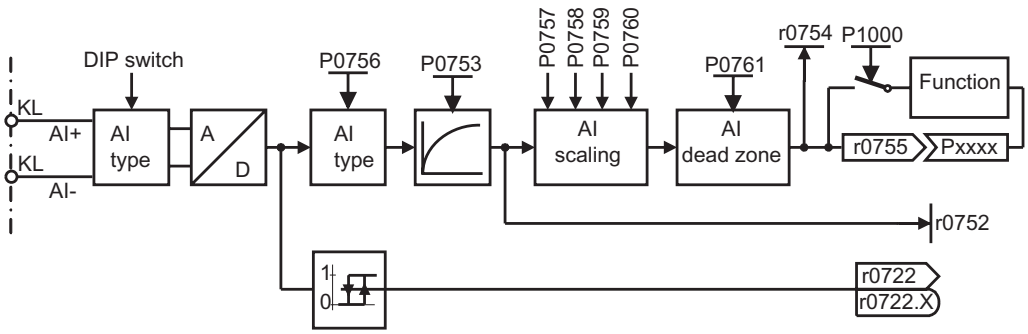

Figure 7-17 AI channel

Note

When the filter time constant P0753 (AI-PT1) is increased, this smooths the AI input signal therefore reducing the ripple. When this function is used within a control loop, this smoothing has a negative impact on the control behavior and immunity to noise (the dynamic performance deteriorates).

Note

The analog inputs can be used as digital inputs with the switching thresholds: high > 4 V, low < 1.6 V. Setting P0712 and P0713 > 0 assign digital input functions to the analog inputs. The following figure shows a connecting example:

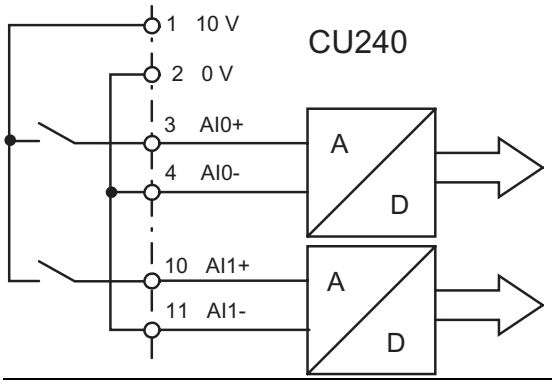

7.7 Analog outputs (D/A converter)

Data

Quantity:	2
Parameter range:	r0770 … P0785
Function chart number:	FP2300
Features:	
• cycle time:	4 ms
• resolution:	12 bit
• accuracy:	1 % referred to 20 mA

Description

Two analog outputs are provided which can be programmed to indicate a variety of variables. Some of the more popular settings are pre-selected (see table below), but others (BICO outputs) can be allocated using the BICO internal connection feature.

Table 7-18 Pre-set analog outputs

Parameter	Description
r0020	CO: Frequency setpoint before RFG
r0021	CO: Actual filtered frequency
r0024	CO: Actual filtered output frequency
r0025	CO: Actual filtered output voltage
r0026	CO: Actual filtered DC-link voltage
r0027	CO: Actual filtered output current
…	…
r0052	CO/BO: Actual status word 1
r0053	CO/BO: Actual status word 2
r0054	CO/BO: Actual control word 1
…	…

In order to adapt the signal, the D/A converter channel has several function units (filter, scaling, dead zone) which can be used to modify the digital signal before conversion (see figure below).

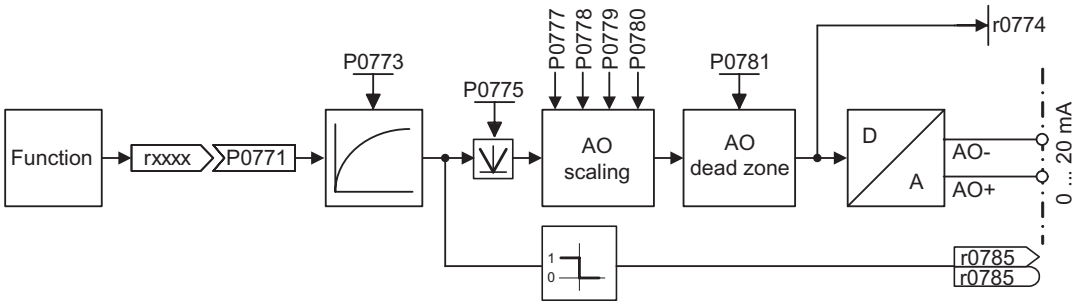

Figure 7-18 D/A converter channel

Note

The analog output 0 (AO0) can be changed-over from current output (P0776 = 0) to voltage output (P0776 = 1).

The analog output 1 (AO1) only provide current output (0 … 20 mA). The 0 … 10 V voltage signal can be generated by connecting a 500 Ω resistor across the outputs. The voltage drop across the resistor can be read using parameter r0774 if the parameter P0776 is changed-over from current output (P0776 = 0) to voltage output (P0776 = 1). The D/A scaling parameters P0778, P0780 and the D/A converter dead zone must still be entered in mA (0 … 20 mA).

With setting parameter P0775 = 1 it is possible to detect negative values on the input side of the D/A converter channel. If enabled, this parameter will take the absolute value of the value to be outputed (the AO-linear characteristic is mirrored on the y axis). If the value was originally negative then the corresponding bit in r0785 is set.

Fail-Safe Functions 8

8.1 Overview of the fail-safe functions

Overview

⚠ WARNING

Installation and protection level of frequency inverters in fail-safe systems

All installation areas for frequency inverters with fail-safe functions as well as outside installed components of the according fail-safe system, if correctly installed, must comply with the minimum protection level of IP54 [see EN 60529 (IEC 60529)].

Change of frequency inverters with fail-safe functions

When carrying out a swap of frequency inverters, it is not allowed to replace a frequency inverter with fail-safe functions with a Standard frequency inverter. Replacing a frequency inverter with fail-safe functions with a Standard frequency inverter disables all fail-safe functions that have been implemented and therefore can lead to personal injury and damage to the machine. A replacement of fail-safe components with standard components has to be considered as a completely new application and re-commissioned as such.

Dimensioning of the Motor

If regenerative loads occur in the application, the motor must be dimensioned so that its slip in super-synchronous operation always remains below the rated slip.

Dimensioning of the Motor holding brake

The motor holding brake must be dimensioned that in case of a fault the complete drive can be braked to zero from any possible operational speed. If no holding brake is present, the machine manufacturer must adopt other suitable measures of protection against motion after the power to the motor has been cut (e.g. to protect against sagging loads).

Regenerative load with SLS

With the fail-safe functions "safely limited speed" (SLS) and "safe stop 1" (SS1) operation with permanent regenerative loads is not permitted.

Note

In order to verify the parameters for the fail-safe functions, an acceptance test must always be carried-out after commissioning, reset and also when changing a completely backed-up data set of the parameters for the fail-safe functions. This acceptance test must be appropriately logged and documented. For more details refer to section "Acceptance Test and Acceptance Log" in the Operating Instructions.

The frequency inverter with fail-safe functions has specific fail-safe functions integrated into its system. These are:

- Safe Torque Off (STO)
- Safe Stop 1 (SS1)
- Safely limited Speed (SLS)
- Safe Brake Control (SBC) (only CU240S DP-F)

Fail-safe functions are only available on the following components:

- SINAMICS G120 with
  - CU240S DP-F
  - CU240S PN-F
- SINAMICS G120D with CU240D DP-F
- ET 200S FC with ICU24F
- ET 200pro FC with F-Switch

On standard inverters fail-safe features are not available.

The parameters for fail-safe functions are held on two separate processors within the frequency inverter. Each processor holds a unique copy of the parameterized fail-safe function.

These unique copies of the fail-safe parameters are accomplished by double-parameters. Double-parameters have their own unique number, but have identical functionality.

Each processor controls one separate and isolated control mechanism which is continually monitored by the system to ensure it is operating correctly. Should a discrepancy occur, then the passivatied STO is activated.

Note

PROFIsafe via PROFInet

When using fail-safe functions with a CU240S PN-F or a CU240D PN-F see also:
http://support.automation.siemens.com/WW/view/de/25412441

See also

Excel tool (http://support.automation.siemens.com/WW/view/en/21627074)

8.1.1 Permissible applications for the fail-safe functions

Restrictions when using fail-safe functions

The fail-safe function "Safe torque off" (STO) and "Safe brake control" SBC can be used without restriction for all applications.

The fail-safe functions "Safe stop 1" (SS1) and "Safely limited speed" (SLS) are permissible for all applications where there can be no acceleration of the load after the frequency inverter has been shut down.

The fail-safe, drive-autonomous inverter functions

With its integrated, drive-autonomous fail-safe functions, the inverter is also ideal for use in applications with increased safety requirements corresponding to SIL2 in accordance with IEC 61508 and Cat.3 pursuant to EN 954-1:

- Safely limited speed:
  The frequency inverter monitors whether a set ouptut frequency limit value is exceeded, without additional external components
- Safe Stop 1:
  The frequency inverter reduces the ouptut frequency using a braking ramp until it reaches a standstill, and continually monitors this braking process without additional external components
- Safe torque off:
  The frequency inverter switches the motor to a torque-free state.

Prerequisites for using fail-safe functions

For each machine, a risk assessment must have been carried out (e.g., in accordance with EN ISO 1050, "Safety of machinery – Principles for risk assessment"). This risk assessment provides both the functional requirements for safety-related controls and the required classification, e.g., in accordance with SIL (Safety Integrity Level).

In order to make use of the frequency inverter's fail-safe functions the closed-loop control must work perfectly. The drive (drive = inverter + motor + brake + driven machine) must be set up in such a way that all operations of the driven machine are properly controlled and the inverter remains below its limit values (for current, temperature, voltage, etc.). The inverter's power and parameter settings must be suited to both the connected motor and to the application.

When the system has been successfully commissioned, it is necessary to check the typical operating conditions and those related to the limit values, in the form of an acceptance test.

Types of closed-loop control

Assuming that the above prerequisites are met, all fail-safe functions ("Safe torque off", "Safe stop 1" and "Safely limited speed") are permissible and certified for V/f control and vector control.

Applications with safe evaluation of the inverter feedback

In applications where safe machine functions may only be carried out if the ouptut frequency is below a certain threshold value, it is essential that the feedback from the inverter be evaluated accurately. An example of this kind of application would be bolting a protective door in a drive that is still spinning.

The frequency inverter does not have any safe output signals. However, on a safe PLC, for example, the inverter feedback can still be safely evaluated with reference to the following inverter signals:

- Evaluation of the inverter operating state as required by the SS1 function.
  Once requested, the SS1 function requires the inverter to feed back an STO function at the end of the ramp time for SS1. If this does not occur, it must be assumed that the drive has not come to a standstill.
- Evaluation of the inverter operating state as required by the SLS function mode 1
  Once requested, the SLS function mode 1, requires the inverter to report that the reduced speed has been reached at the end of the SS1 ramp time. If this does not occur, it must be assumed that the drive has not reached the reduced speed.
- Evaluation of inverter fault messages
  Additionally, the fail-safe function inverter faults and standard function inverter faults (r0052, bit03/r9772, bit08) should always be evaluated. No faults are expected to occur during a safe function, but if a fault is signaled, it must be assumed that the fail-safe function has malfunctioned.

Tolerances and reaction times

Frequency monitoring is carried out with 15 % tolerance because fail-safe functions SS1 and SLS are executed without an encoder.

The minimum frequency for reliable processing is 1 Hz.

The typical device-internal reaction time to the activation of a fail-safe functions can be taken as follows:

SINAMICS G120, CU240S DP-F:

- Typical reaction time to a digital signal: 20 ms + P9650 (debounce time) + P9651 (filter time)
- Typical reaction time after receiving a PROFIsafe telegram: 20 ms

SIMATIC ET 200pro FC

- Typical reaction time to a shutdown signal: 20 ms

SIMATIC ET 200S FC

- Typical reaction time to a shutdown group signal: 20 ms

For the total reaction time within the system or machine, the following must be taken into account alongside the time stated above:

- The time taken to detect a signal (depending on the sensor being used)
- The time taken to process the signal (depending on the CPU being used, if one is required, and its program scope)
- If necessary, the time taken to transfer the signal via PROFIsafe (depending on the bus system being used, the number and type of bus nodes, and the baud rate)

An Excel tool helps with estimating this reaction time.

The fault reaction times of the internal monitoring of functions SS1 and SLS depend on the currently applicable output frequency of the inverter. For details, please refer to the Operating Manual.

These minimum tolerance and reaction times should be taken into account when configuring the system, e.g., in the layout of the safety clearances for the components.

Connecting a mechanical brake

Connecting a mechanical brake is recommended in the case of applications with functions SS1 and SLS modes 0 and 1, where dangerous states can occur as a result of external events such as a power failure. In the event of a fault, the inverter controls its brake directly, thereby reducing the risk of undefined machine states.

8.1.2 Application examples for fail-safe functions

Permissible applications

Permissible speed characteristic after the inverter has been shut down

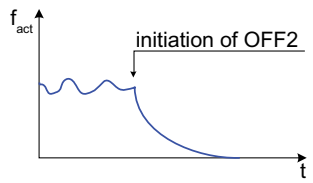

Figure 8-1 Application of all safety functions permissible

Forbidden applications

This is particularly pertinent to applications with overhauling loads. With an overhauling load, the friction torque of the mechanical components (motor, gearbox, etc.) is not enough to prevent the mechanical system from accelerating when the drive is switched off (see Figs. below).

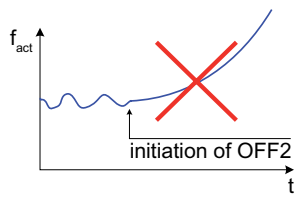

Figure 8-2 Overhauling load – not all safety functions are permissible

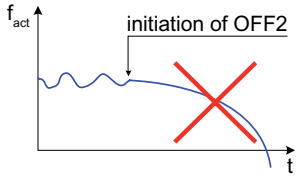

Figure 8-3 Overhauling load – not all safety functions are permissible

Examples of overhauling loads

These are:

- hoisting gears (due to gravitation) and
- winders (due to a second drive).

⚠ WARNING

Fail-safe functions SS1 and SLS must not be used:

- with overhauling loads
- in conjunction with torque control.

Fail-safe function inverter faults F0396 … F0399 can be masked if standard function inverter faults exist. In this case, an acceptance test with a full load should be carried out.

Regenerative operation of the motors (which can occur in the case of, braking with function SS1 for example) is permitted if there is no overhauling load.

There are no restrictions for the STO and SBC function. Of course, for risk assessment and machine design purposes, it should be remembered that an overhauling load can only be stopped by means of a suitable brake when the motor has been switched to a torque-free state.

8.1.3 Dependency of Failsafe and OFF commands

Overview

A fail-safe function can be intercepted by OFF command or by another failsafe command. The following table gives an overview how the commands are prioritized.

		First active Fail-safe or OFF ccommand										
		Passivated STO	STO	SS1	SLS Mode 0	SLS Mode 0, ramp (5.1 / 5.2)	SLS Mode 1	SLS Mode 2	SLS Mode 3	OFF1	OFF2	OFF3
Interruptable by following Fail-safe or OFF-command	Passivated STO		X	X	X	X	X	X	X	X	X	X
	STO	-		X	X	X	X	X	X	X	X	X
	SS1	-	-		X	X	X	X	X	X	X	X
	SLS Mode 0	-	-	-						M	M	M
	SLS Mode 1	-	-	-						M	M	M
	SLS Mode 2	-	-	-						M	M	M
	SLS Mode 3	-	-	-						M	M	M
	OFF1	-	-	-	M	pSTO	M	M	M		-	-
	OFF2	-	-	M	M	pSTO	M	M	M	X		X
	OFF3	-	-	-	M	pSTO	M	M	M	X	-	

Figure 8-4 Fail-safe commands, interrupted by an OFF command or another fail-safe command

Explanation to the table:

M / M means the safety monitoring is still active, even if an OFF command is given. That means, if the speed raises due to any reason above the SLS monitoring a passivated STO will be activated.

8.2 Monitoring the fail-safe functions

Overview

There are three monitoring procedures:

- Time controlled request for forced dynamization
- Forced dynamization
- Process dynamization

The dynamization process is designed to detect hidden software and hardware faults of the two shutdown paths. The forced dynamization consists of a processor self-test of both processores within the inverter (standard processor and fail-safe processor) and a hardware test. The hardware test includes a test to ensure, that if parameterised, the Safe Brake Control is functioning correctly.

Time controlled request for forced dynamization

In fail-safe applications it is necessary to initiate a safe torque off with forced dynamization at regular intervals. The intervall has to be set via P9659, minimum is once a year.

When the time, set in P9659 (hours or fractions of hours), has expired, a warning A1699 is issued by the system. This warning can only be cleared by carrying out forced dynamization. If the forced dynamization was successful, the timer is reset to the value in P9659 and the inverter is ready to run. If the forced dynamization fails, the timer remains at 0 and the inverter is disabled from running.

The time remaining until the next forced dynamization becomes necessary is displayed in r9660.

At each successful forced dynamization r9660 is reset to the value of P9659.

Forced dynamization

The forced dynamization process delays the switch-on process, but ensures that all fail-safe features of the inverter are functioning correctly. It is enabled per default and can be changed via P9601.1 / P9801.1 (1 = enabled, 0 = disabled).

Note

Parameter P9601 and P9801 is also used to activate the transfer of the state of the fail-safe digital inputs (FDI) via PROFIsafe:

- P9601.2 = P9801.2 = 1: FDI0 status bit transfer via PROFIsafe activated
- P9601.3 = P9801.3 = 1: FDI1 status bit transfer via PROFIsafe activated

The forced dynamization process is automatically initiated at the following events, independent from the settings of P9601 and P9801:

- On power-up of the inverter.
- When the passivated Safe Torque Off (passivated STO) function is deactivated
- When commissioning of fail-safe functions is left.

Should the delay be unacceptable for the user application, it can be disabled via P9601/P9801 for the following events:

- When the Safe Torque Off (STO) is left
- When Safe Stop 1 (SS1) is left after STO was reached

⚠ CAUTION

When carrying-out the forced dynamization, the shutdown paths of the motor brake are also tested. This results in a brief opening command (2 ms to 28 ms) at the motor brake.

The mechanical part of the EM brake generally requires longer than 30 ms to open. This means that this dynamic operation generally has no influence on the motor shaft itself.

⚠ WARNING

The customer is responsible to use only EM brakes with opening times longer than 30 ms.

Process dynamization

The process dynamization is always carried out at STO initialisation or SS1 end. The test includes both shutdown paths and the EM-brake switching circuit but does not perform a processor self-test or a complete test of the Safe Brake Control.

⚠ WARNING

Dynamization of the shutdown paths

For safety reasons, it is necessary to initiate a forced dynamization procedure at intervals of maximal 8760 hours (one year) in order to check its operability. Thus, 8760 hours after the last activation of the forced dynamization the inverter sets a status bit that specifies this requirement.

The process control must then initiate a forced dynamization at the next opportunity, for example, when the drive has in any case a short phase with zero speed. The setting and clearing of the status bit and the dynamization must be logged as process data by the higher-level control.

8.3 Limiting values for SS1 and SLS

Maximum fault reaction time

The maximum fault reaction time during active safe braking ramp (used in SS1 and SLS) is given as delay from crossing the parameterized envelope until triggering a passivated STO.

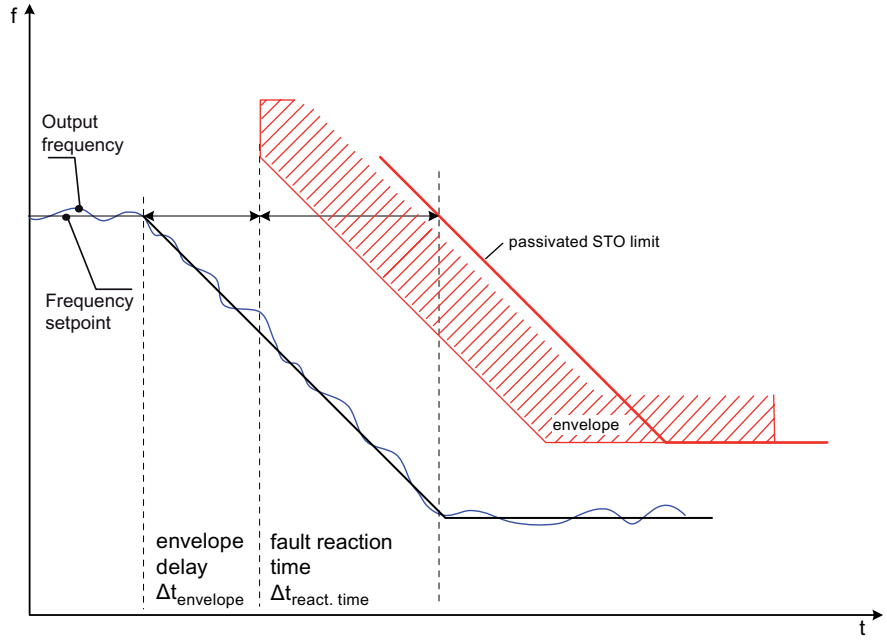

Figure 8-5 Maximum shut-down time

Description

When parameterizing the limiting envelope for SLS and SS1 with P9680/P9880 and P9691/P9891 the following minimum tolerances should be considered to provide maximum robustness of the drive:

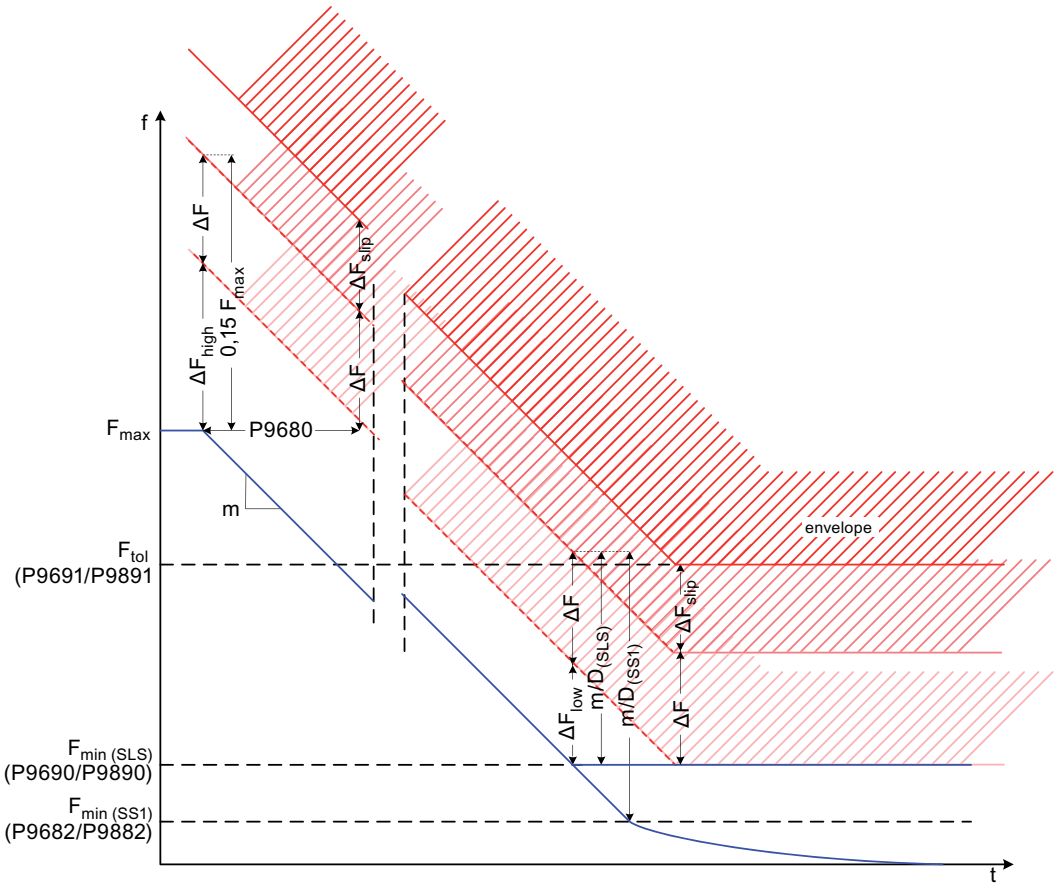

Figure 8-6 Safety limits for SLS and SS1

1. The minimum monitoring speed tolerance P9691 should be set to
   $P9691 \geq 1.15 \cdot P9690 + \Delta F_{slip}$
   thus defining the minimum frequency tolerance as
   $\Delta F = P9691 - P9690 - \Delta F_{slip}$
   where ΔF_{slip} is given as $\Delta F_{slip} = r0330 \cdot P0310/100\%$

   This prevents sporadic trips caused by measurement inaccuracies and additional slip compensation. Note that according to the above formula, P9691 must be set, even if SLS is not parameterized.

2. The resulting frequency tolerance ΔF_{high} due to the minimum frequency tolerance at high frequencies is then given as
   $\Delta F_{high} \geq 0.15 \cdot F_{max} - \Delta F$
   where F_{max} defines the maximum process frequency at initiation of SLS or SS1.

3. The resulting frequency tolerance ΔF_{low} due to the minimum frequency tolerance at low frequencies is then given as
   $\Delta F_{low} \geq \frac{m}{D} - \Delta F$

where the gradient m is defined as

$$m = \frac{200}{P9681}$$

The denominator D in the above formula is calculated as follows:

SLS parameterized	D = 2 • P9690
SS1 parameterized	D = 2 • P9682
SLS and SS1 parameterized	D = 2 • min [P9682, P9690]

1. The valid delay ΔF_{delay} is then given as maximum of
   $\Delta F_{delay} = \max [\Delta F_{low}, \Delta F_{high}]$
2. Finally the minimum braking ramp delay can be calculated as
   $$P9680 \geq \frac{\Delta F_{delay}}{m}$$

The safe frequency envelope results from a time delay (P9680) in t-direction and an additional frequency tolerance ΔF (caused by measurement inaccuracies) and ΔF_{slip} (caused by slip compensation) in F-direction.

Example of how to calculate the limit values for SS1 and SLS

The following example illustrates how the fail-safe formulae are calculated for the 1LA7060-4AB10-Z motor and for the fail-safe parameter factory settings. The motor technical data and values for calculating the necessary fail-safe parameters are given in the tables below.

Table 8-1 Technical data

Parameter	Parameter text	Value
P0300	Select motor type	1 (induction motor)
P0304	Rated motor voltage	230/400 V Δ/Y
P0305	Rated motor current	0.73/0.42 A
P0307	Rated motor power	0.12 kW
P0308	Rated motor cosPhi	0.75
P0310	Rated motor frequency	50 Hz
P0311	Rated motor speed	1350 1/min
r0313	Motor pole pairs	2

Table 8-2 Fail-safe parameter factory settings

Parameter	Parameter text	Value
P9681	SI braking ramp; Ramp-down time	10 s
P9682	SI minimum speed for standstill detection	5.0 Hz
P9690	SI setpoint for SLS	10.0 Hz

- Upper tolerance range for SLS P9691

  The slip frequency is calculated as follows:
  F_{slip} = r0330 • P0310

  where the rated motor slip r0330 is

  – r0330 = (P0310 - P0311 • r0313/60)/P0310 • 100% →

  – F_{slip} = (50 [Hz] - 1350 [rpm] • 2/60)/50 [Hz] • 100% • 50 [Hz] →
    F_{slip} = 5 [Hz] or 10 [%] of 50 [Hz] (P2000 = 50 [Hz])

  The upper tolerance range for SLS P9691 is therefore:
  P9691 ≥ 1.15 • P9690 + F_{slip}
  or
  P9691 ≥ 1.15 • 10 [Hz] + 5 [Hz]
  P9691 ≥ 16.5 [Hz]

  At this point, parameter P9691 should be selected, e.g.
  P9691 = 16.5 [Hz] (or 17 [Hz]).

  The minimum frequency tolerance is calculated as follows:

  ΔF = P9691 - P9690 - F_{slip}
  or
  ΔF = 16.5 [Hz] - 10 [Hz] - 5 [Hz] = 1.5 [Hz]

- Resulting frequency tolerance ΔF_{high}

  The following formula is used to determine the upper frequency tolerance ΔF_{high}:
  ΔF_{high} ≥ 0.15 • F_{max} - ΔF

  If, for example, F_{max} = 50 [Hz], then:
  ΔF_{high} ≥ 0.15 • 50 [Hz] - 1.5 [Hz]
  ΔF_{high} ≥ 6 [Hz]

- Resulting frequency tolerance ΔF_{low}

  The following formula is used to determine the lower frequency tolerance ΔF_{low}:

  ΔF_{low} ≥ m/D - ΔF

  The rise m is calculated as follows:

  m = 200/P9681 = 200 [Hz]/10 [s] = 20 [Hz/s]

  Value D is calculated as follows for each of the items below:

SLS parameterized	D = 2 • P9690 = 2 • 10 [Hz] = 20 [Hz]
SS1 parameterized	D = 2 • P9682 = 2 • 5 [Hz] = 10 [Hz]
SLS and SS1 parameterized	D = 2 • min [P9682, P9690]
	D = 2 • min [5 [Hz], 10[Hz]] = 10 [Hz]

  Let us consider a situation in which both the SLS and SS1 functions are parameterized. In this case, the formula for the resulting frequency tolerance ΔF_{low} is as follows:

  ΔF_{low} ≥ m/D - ΔF
  ΔF_{low} ≥ 20 [Hz/s]/10 [Hz] - 1.5 [Hz]
  ΔF_{low} ≥ 0.5 [Hz]

- Delay ΔF_{delay}

  Please note that ΔF_{low} and ΔF_{high} are capable of assuming both negative values and a value of 0. Therefore, it is important to compare ΔF_{delay} with 0 and to determine the maximum value.

The formula is as follows:

ΔF_{delay} = max [ΔF_{low}, ΔF_{high}, 0] = max [0.5 [Hz], 6 [Hz], 0] = 6 [Hz]

- Minimum delay of braking ramp

  The minimum delay of braking ramp is calculated as follows:
  P9680 ≥ ΔF_{delay}/m
  P9680 ≥ 6 [Hz]/20 [Hz/s]
  P9680 ≥ 0.3 [s]
  Parameter P9680 must be set to 300 [ms].

  Thus, the results of our calculations are as follows:

  Upper tolerance range P9691 = 16.5 [Hz]
  Minimum delay of braking ramp P9680 = 300 [ms]

Fault reaction time

A passivated STO is always triggered immediately after the parameterized safe envelope frequency is exceeded. However, note that the output frequency may deviate (is usually higher) from the set point frequency due to normal operating states (slip compensation, PID, etc.) or internal drive faults.

Therefore, as the envelope starting frequency is related to the output frequency the paramterized envelope may be shifted as shown in the next figure.

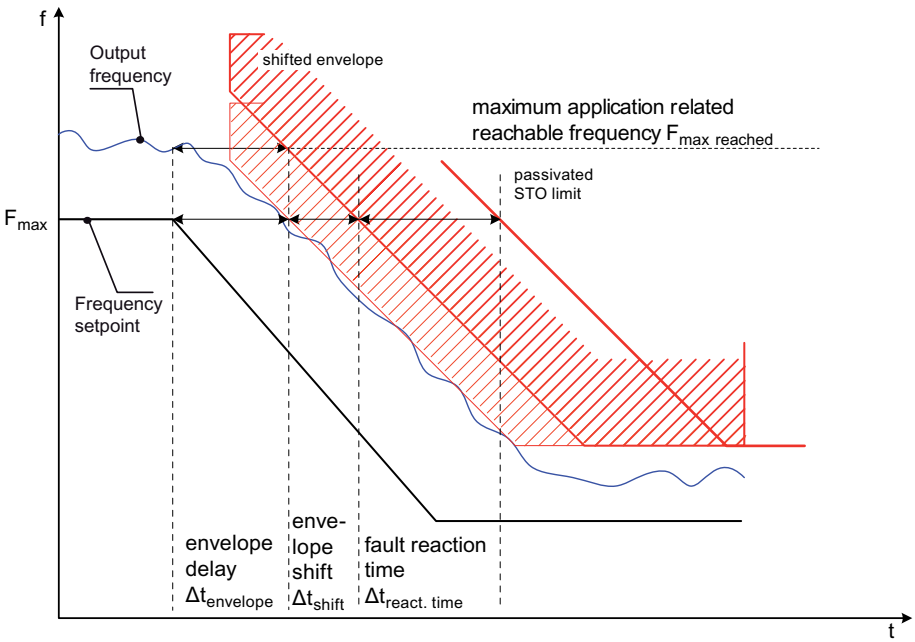

Figure 8-7 Maximum fault reaction time

The maximum envelope shift corresponds to the fault reaction time $\Delta t_{reaction\ time}$ (maximum passivated STO limit) wich is given as:

$$\Delta t_{reaction\ time} = \frac{F_{max\ reach} - F_{max}}{m}$$

8.4 Safe Torque Off

Data

Parameter range:	P0003, P0010
	P9603/P9803, bit 04, bit 05 or bit 07 (PROFIsafe)
	P9761, P9799/P9899, r9798/r9898, P3900
Warnings	A1691, A1692, A1696, A1699
Faults	F1600, F1616

Description

Safe Torque Off (STO) is the simplest fail-safe function and its purpose is to safely remove any torque from the motor. Once the motor is at a standstill, STO triggers a switch-on lock which prevents the inverter from restarting the motor. Shutting down the triggering pulses of the Power Module effectively causes the motor to coast down. The mechanical brake is closed immediately if connected.

If Safe Brake Control is activated, its status is indicated in the following figures via r9772.14:

- r9772.14 = 0 -> brake open
- r9772.14 = 1 -> brake closed

When the STO function is initiated the inverter performs the following actions:

1. The triggering pulses on the Power Module are disabled.
2. The mechanical brake is closed immediately (if connected).
3. The status LED STO starts flashing.
4. The status LED ES is switched on, indicating the end-of-state has been reached.

When the STO signal is removed the inverter performs the following actions:

Note

The pulse-lock must be released by applying a rising edge signal (OFF1/ON).

---

1. The process dynamization is always carried out.
2. The forced dynamization procedure is carried out (if parametrized by P9601 and P9801).
3. The forced dynamization timer (P9660) is reset to the value in P9659 (if the forced dynamization procedure was carried out successfully).
4. The safe brake control opens the brake, if not closed by holding brake function (P1215).
5. The status LED STO is switched on and ES is switched off.

These actions are shown in the figure below.

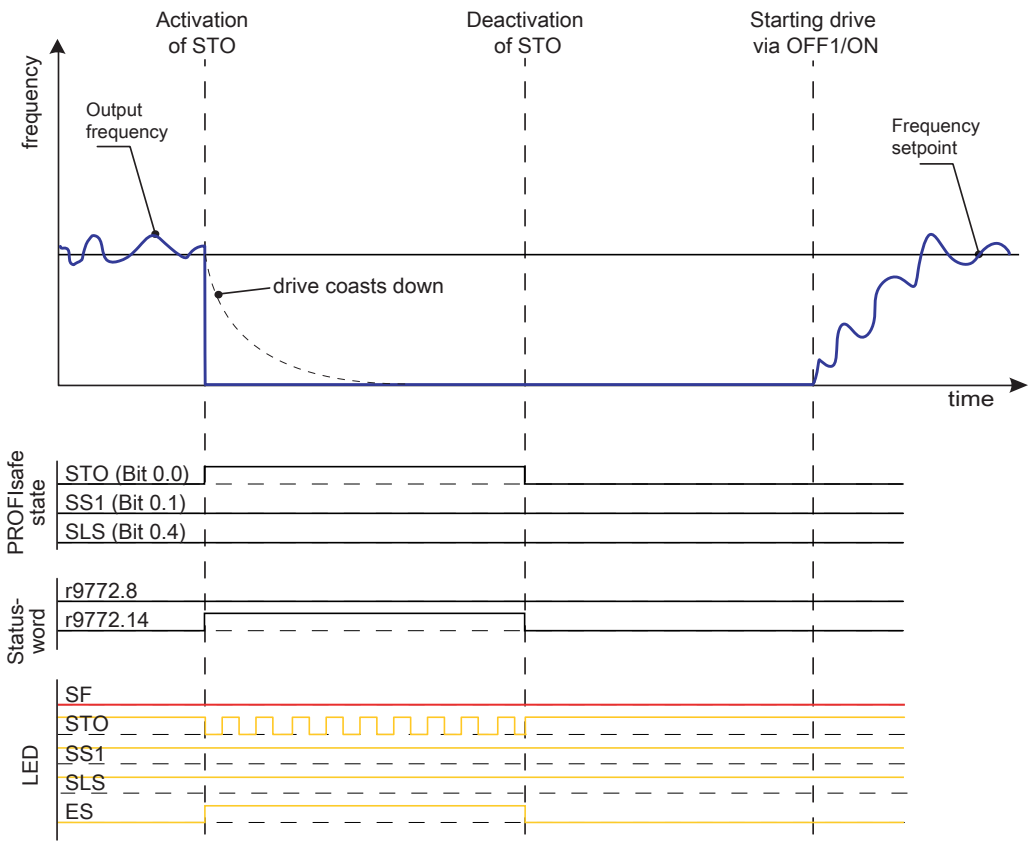

Figure 8-8 Safe Torque Off function

Note

The state of the fail-safe functions is announced by r9772.

⚠ CAUTION

Reaction time

The reaction time for an STO is 20 ms.

Fault reaction time

An internal failure during an STO will be detected within 20 ms and leads immediately to a passivated STO.

Passivated Safe Torque Off (passivated STO)

The passivated STO is always initiated when a detected fault requires, that the drive must be brought to a standstill. The drive can be returned to operation only when the fault has been explicitly acknowledged and a forced dynamization procedure has been carried out.

The passivated STO state is left by the following procedure:

1. Turning the drive off by sending an OFF1-signal.
2. Acknowledging all active faults.
3. Sending an ON-signal after the dynamization procedure was carried out successfully.

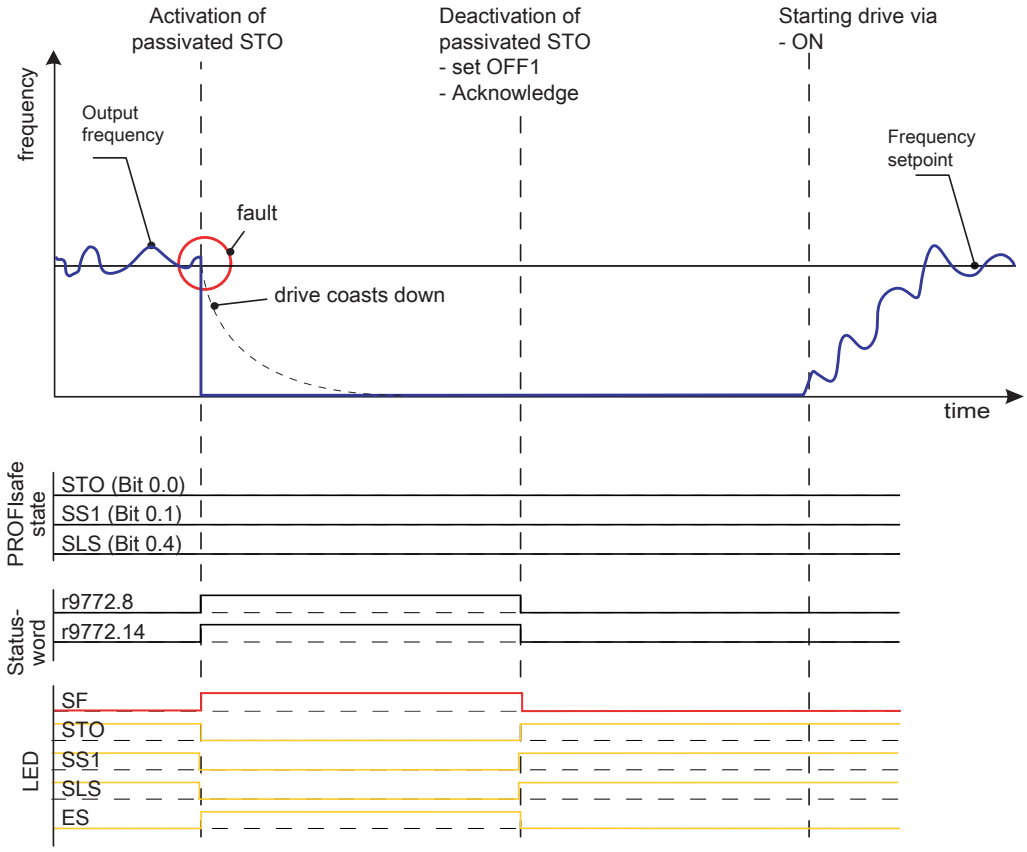

Figure 8-9 Passivated STO function

⚠ CAUTION

After STO or passivated STO it is possible (but almost unlikely) that the field generating components become faulty in a way that they will generate one single rising edge of a rotating field causing the motor to jerk for a defined maximum electrical angle of 60 °.

The resulting rotating angle at the motor shaft is smaller than the maximum electrical angle due to inertia and the number of pole pairs.

Note

A passivated STO is always initiated by a safety fault condition within the drive. Therefore, the drive always performs a forced dynamization procedure before it is allowed to restart.

The passivated STO function has the highest priority and cannot be intercepted by any other function.

8.5 Safe Stop 1

Data

Parameter range:	P0003, P0010
	P9603/P9803, bit 02, bit 03 or bit 07 (PROFIsafe)
	P9680/P9880
	P9681/P9881
	P9682/P9882
	P9761, P9799/P9899, r9798/r9898, P3900
Warnings	A1691, A1692, A1696, A1699
Faults	F1600, F1616

Description

Contrary to STO, the output frequency of the inverter has an influence on the behavior of the SS1 (Safe Stop 1) function. When SS1 is initiated the output frequency of the inverter is scanned, if it is lower than the minimum frequency for standstill detection set in P9682/P9882, the STO function is initiated immediately to bring the motor to a standstill. If the inverter output frequency is higher than the minimum frequency for standstill detection, then the motor is slowed down using the safe braking-ramp time set in P9681 and P9881. See figure below.

The SS1 function can be intercepted by one of the following commands:

- Passivated STO
- Safe Torque Off (STO)
- OFF2 (SS1 monitoring still active)

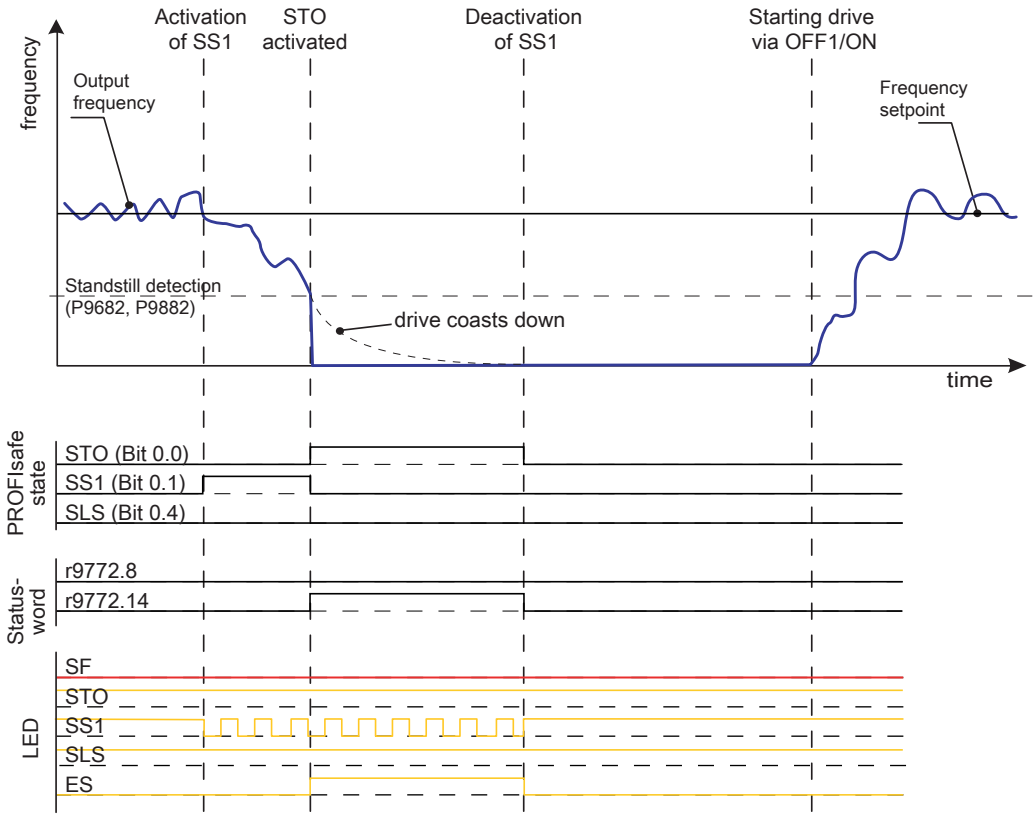

Figure 8-10 Safe Stop 1 (SS1) function

CAUTION

The frequency setpoint can increase related to the following functions

- PID Trim
- $V_{dc\ max}$ controller

only active in conjunction with V/f control

- Slip compensation
- Resonance damping
- I_{max}

As the frequency is monitored after adding these values, this increase should be taken into account by the user when parameterizing the safe frequency envelope.

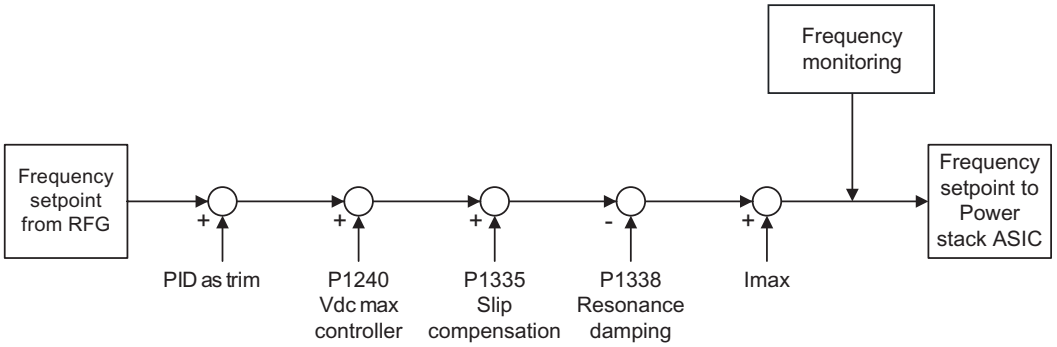

When SS1 is activated, the following actions are performed by the inverter:

1. Both shutdown paths initiate a fail-safe monitored brake ramp function.
2. The motor is slowed down by the safe brake ramp function.
3. The status LED SS1 starts flashing.
4. When the minimum speed for standstill detection is reached, the STO function is activated.
5. The mechanical brake is closed (if connected).
6. The status LED ES is switched on.

The SS1 function can be interrupted by either an OFF2 command or the STO function.

When SS1 is deactivated before the "minimum speed for standstill detection" (P9682/P9882) is reached, the following actions are performed by the inverter:

1. The monitoring of the output frequency is deactivated.
2. The drive accelerates to the frequency setpoint
3. The status LED SS1 changes from flashing to on state.

When SS1 is deactivated after the "minimum speed for standstill detection" (P9682/P9882) is reached, the following actions are performed by the inverter:

Note

The pulse-lock must be released by applying a rising edge signal (OFF1/ON).

---

1. STO is deactivated.
2. The forced dynamisation procedure is carried out (if parameterized by P9601/P9801).
3. The forced dynamisation timer (P9660) is reset to the value in P9659 (if the forced dynamisation procedure was carried out successfully).
4. The brake opens, if it is not held closed due to motor holding brake state.
5. The status LED SS1 changes from flashing to on state.
6. The status LED ES is switched off.

Note

The state of the fail-safe functions is announced by r9772.

Note

The fail-safe function SS1 should not be activated during following processes are active:

- Search process in flying restart
- Motor data identification
- Speed control optimization

It is recommended not to use the torque control (P1300 = 22, 23 or P1501 > 0) as a control mode for the fail-safe function SS1.

⚠ CAUTION

Reaction time

The reaction time for an SS1 is 20 ms.

Fault reaction time

The reaction times after failure occurred until the passivated STO is triggered must be given in the user manual:

- Fault reaction time during STO:

  During an STO an internal failure is detected within 20 ms by the inverter which immediately triggers a passivated STO.
- Fault reaction time during SS1 and SLS:

  During an SS1 and an SLS the internal failure detection time is related to the inverter output frequency. A failure is always detected when the monitored stator frequency at the inverter output exceeds the safe frequency envelope. The first frequency measurement value which lies outside the safe area triggers a passivated STO. The maximum reaction time for a passivated STO during SS1 and SLS is 8 ms, whereas the inverter can reach a maximum speed of 650 Hz before shutting down. However, this speed can only be reached for one half frequency cycle.

  E.g. the maximum reaction time at 650 Hz is 8 ms + 1/650 Hz/2 = 8.7 ms, the maximum reaction time at 10 Hz is 8 ms + 1/10 Hz/2 = 58 ms.

8.6 Safely Limited Speed

Data

Parameter range:	P0003, P0010
	P9603/P9803, bit 00, bit 01 or bit 07 (PROFIsafe)
	P9680/P9880
	P9681/P9881
	P9690/P9890
	P9691/P9891
	P9692/P9892
	P9761, P9799/P9899, r9798/r9898, P3900
Warnings	A1691, A1692, A1696, A1699
Faults	F1600, F1616

Description

The purpose of the Safely Limited Speed (SLS) function is to monitor the output frequency to ensure that it does not exceed the SLS monitoring set by parameters P9691 and P9891.

Should the SLS monitoring be exceeded a braking process will be initiated which is monitored using the safe braking ramp function. If a stationary state is detected, the passivated STO will be initiated to bring the motor to a safe standstill. If the braking functions fail, which is detected as a fault, the passivated STO function is initiated and cannot be cleared without explicit acknowledgment of the fault.

The SLS function can be intercepted by the following commands:

- Safe Torque Off (STO)
- Safe Stop 1 (SS1)
- OFF1
- OFF2
- OFF3

Details see section "Dependency of Failsafe and OFF commands"

If the standard OFF commands are used with fail-safe functions, the interaction of the commands on the system are automatically monitored in the background by the fail-safe system (e.g. the commands, which are not fail-safe, cannot cause the inverter to accelerate in an unsafe way as the passivated STO function will be triggered automatically).

Note

The fail-safe function SLS should not be activated during following processes are active:

- Search process in flying restart
- Motor data identification
- Speed control optimization

It is recommended not to use the torque control (P1300 = 22, 23 or P1501 > 0) as a control mode for the fail-safe function SLS.

⚠ CAUTION

Reaction time

The reaction time for an SLS is 20 ms.

Fault reaction time

The reaction times after failure occurred until the passivated STO is triggered must be given in the user manual:

- Fault reaction time during STO:

  During an STO an internal failure is detected within 20 ms by the inverter which immediately trig-gers a passivated STO.
- Fault reaction time during SS1 and SLS:

  During an SS1 and an SLS the internal failure detection time is related to the inverter output frequency. A failure is always detected when the monitored stator frequency at the inverter output exceeds the safe frequency envelope. The first frequency measurement value which lies outside the safe area triggers a passivated STO. The maximum reaction time for a passivated STO during SS1 and SLS is 8 ms, whereas the inverter can reach a maximum speed of 650 Hz before shutting down. However, this speed can only be reached for one half frequency cycle.

  E.g. the maximum reaction time at 650 Hz is 8 ms + 1/650 Hz/2 = 8.7 ms, the maximum reaction time at 10 Hz is 8 ms + 1/10 Hz/2 = 58 ms.

Modes of behavior

The SLS function has four modes of behavior giving the user a choice of functionality to suit their specific application. These modes of behavior of the SLS function are controlled by setting the required values in parameters P9692 and P9892.

CAUTION

Due to monitoring reasons, the so called "accuracy limit for SLS" with a value of 1 Hz is set. If - in SLS mode 0, 1 or 2 - the output frequency under-runs this value, an STO is triggered immediately. In SLS mode 3 a 5-s timer starts and after that an STO will be triggered if the frequency is still below 1 Hz.

⚠ WARNING

If due to dynamic loads the frequency runs above the SLS limit (P9691/P9891) a passivated STO is triggered; if it falls below the accuracy limit in case of SLS 0, 1 or 2 an STO is triggered immediately, in case of SLS mode 3 it will be triggered, if after 5 s the frequency is still below 1 Hz. Therefore when designing the plant, dynamic load changes must be taken into account to prevent an unintented activation of fail-safe functions.

Furthermore the acceptance test should be performed under worst-case load conditions.

CAUTION

In SLS modes 0 and 1, the frequency setpoint can increase related to the following functions

- PID Trim
- $V_{dc\,max}$ controller

only active in conjunction with V/f control

- Slip compensation
- Resonance damping
- I_{max}

As the frequency is monitored after adding these values, this increasement should be taken into account by the user when parameterising the safe frequency envelope.

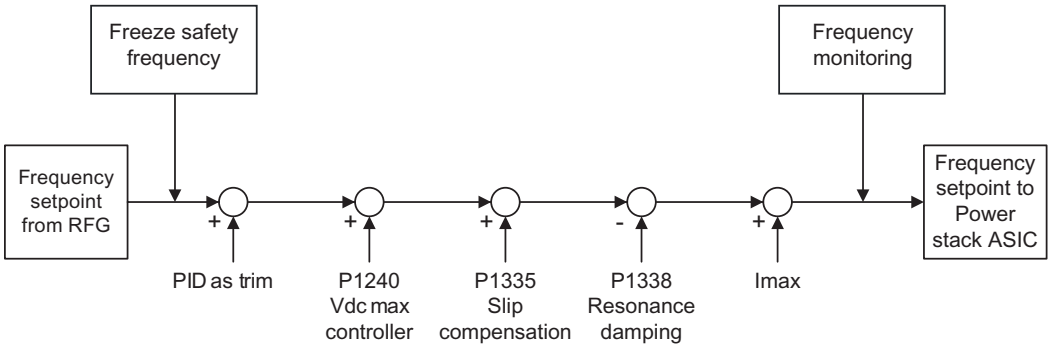

8.6.1 Safely Limited Speed, Mode 0

SLS Mode 0, P9692 = P9892 = 0

If, after initiation of SLS, the output frequency exceeds the SLS monitoring set with P9691 and P9891, then the passivated STO function is initiated to bring the motor to a standstill.

If the output frequency is below the SLS monitoring, all control signals that can affect the output frequency are blocked. No external control of the output frequency is possible.

Once the output frequency is locked at its present value, if the motor again falls below this frequency (for example additional load on the motor), it is not interpreted as a fault condition and no action is taken. See the following table.

If the Safe Brake Control is activated, its status is indicated in the following figures via r9772.14:

- r9772.14 = 0 -> brake open
- r9772.14 = 1 -> brake closed.

During SLS mode 0 is active the fault reaction time for a passivated STO is given according to the formula:

$$\text{Reaction time} = 8\ \text{ms} + 0{,}5 \cdot \frac{1}{f_{out}}$$

Output frequency = f_{out}

SLS Mode 0, case 1: SLS monitoring (p9691/p9891) > Frequency setpoint > SLS setpoint

Activation of SLS =>	• SLS monitoring activated • SLS-LED flashing • ES-LED on • Frequency setpoint deactivated • Monitored ramp down to SLS setpoint
When SLS setpoint is reached =>	• SLS monitoring on
Deactivation of SLS =>	• SLS monitoring off • Frequency setpoint activated • SLS monitoring off • SLS-LED and ES-LED off

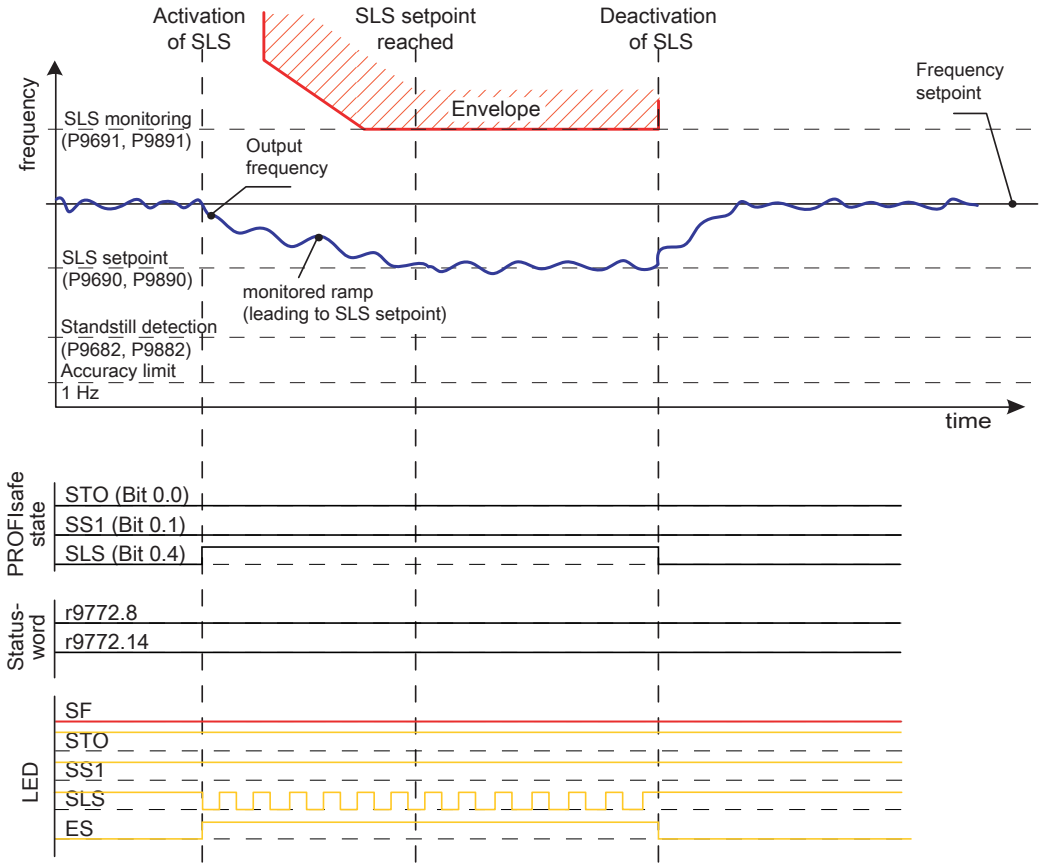

Figure 8-11 SLS Mode 0, case 1: SLS monitoring (p9691/p9891) > Frequency setpoint > SLS setpoint

SLS Mode 0, case 2: SLS setpoint > Frequency setpoint > standstill detection (p9682/p9882)

Activation of SLS =>	• SLS monitoring activated • SLS-LED flashing • ES-LED on • Frequency setpoint deactivated
When SLS setpoint is reached =>	• SLS monitoring on
Deactivation of SLS =>	• SLS monitoring off • Frequency setpoint activated • SLS monitoring off • SLS-LED and ES-LED off

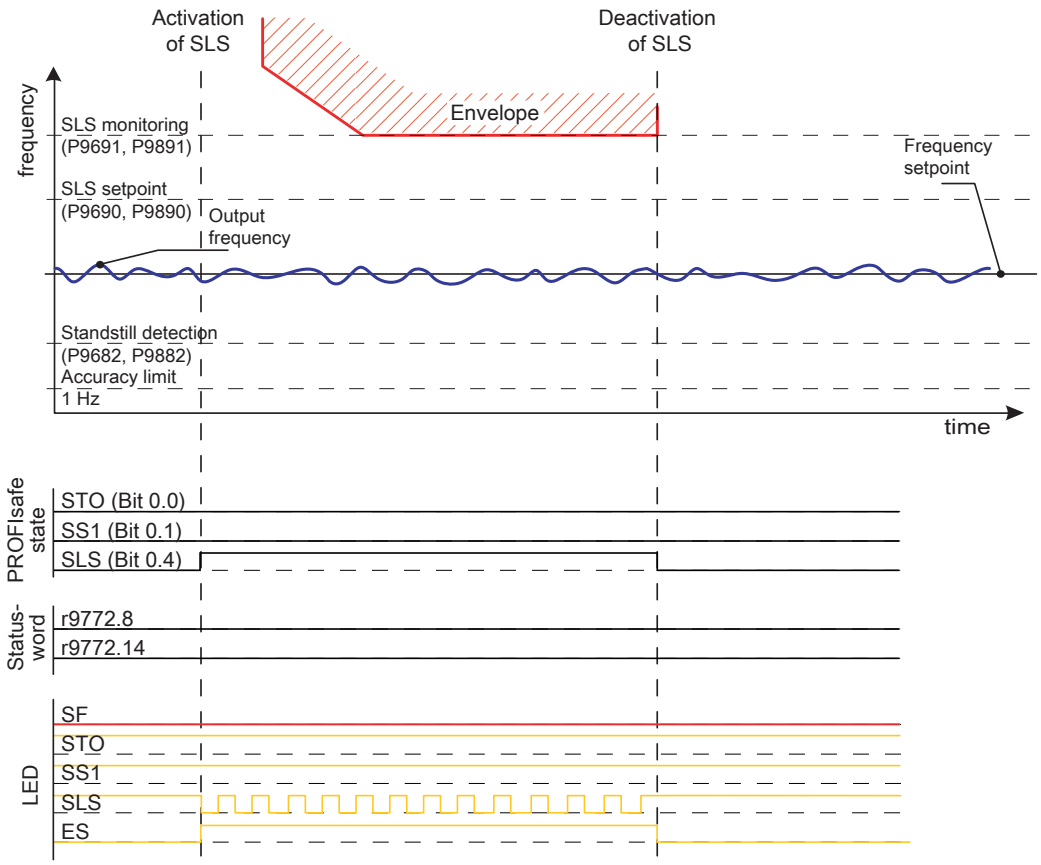

Figure 8-12 SLS Mode 0, case 2: SLS setpoint > Frequency setpoint > standstill detection (p9682/p9882)

SLS Mode 0, case 3: Standstill detection (p9682/p9882) > Frequency setpoint > accuracy limit

Activation of SLS =>	• SLS monitoring activated • SLS-LED flashing • ES-LED on • Frequency setpoint deactivated
When SLS setpoint is reached =>	• SLS monitoring on
Deactivation of SLS =>	• SLS monitoring off • Frequency setpoint activated • SLS-LED and ES-LED off

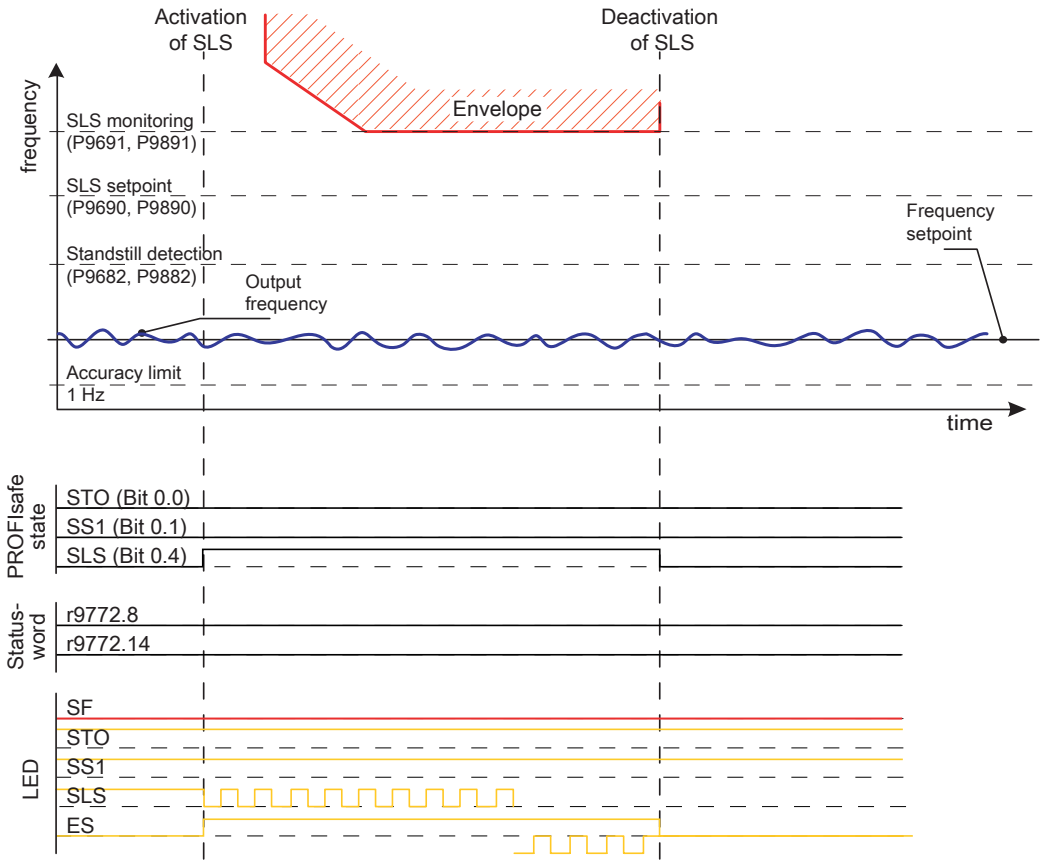

Figure 8-13 SLS Mode 0, case 3: Standstill detection (p9682/p9882) > Frequency setpoint > accuracy limit

SLS Mode 0, cases 1 to 3:

If output frequency increases SLS tolerance (e.g. due to trim or slip compensation) =>

- passivated STO is triggered
- SF-LED on
- STO-LED off
- SS1-LED off
- SLS-LED off

Deactivation of SLS =>

- No action

To start again, the passivated STO must be acknowledged and a new on command is necessary to ramp up to frequency setpoint.

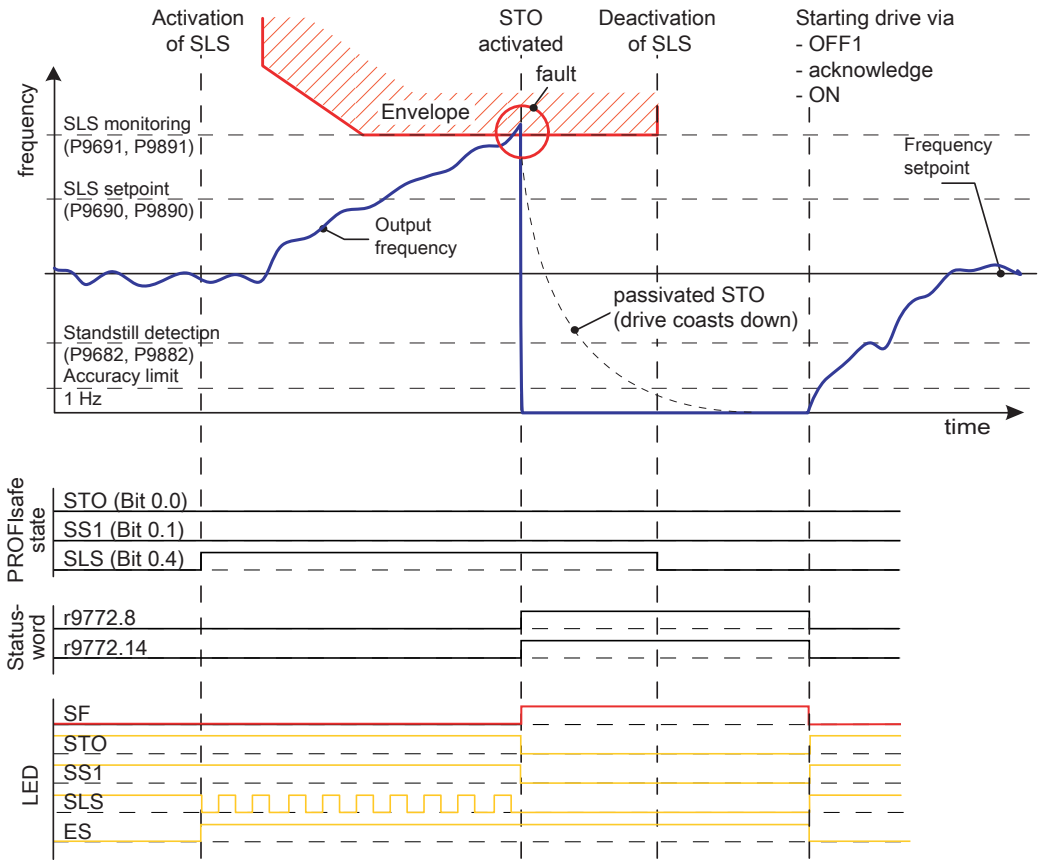

Figure 8-14 SLS Mode 0, cases 1 to 3

SLS Mode 0, case 4: accuracy limit > Frequency setpoint

Activation of SLS =>
- SLS monitoring activated
- STO activated
- SLS-LED flashing
- ES-LED on
- Frequency setpoint deactivated

Deactivation of SLS =>
- SLS monitoring off
- Frequency setpoint activated
- SLS-LED on
- ES-LED off

To start again, STO must be acknowledged and a new ON command is necessary to ramp up to frequency setpoint.

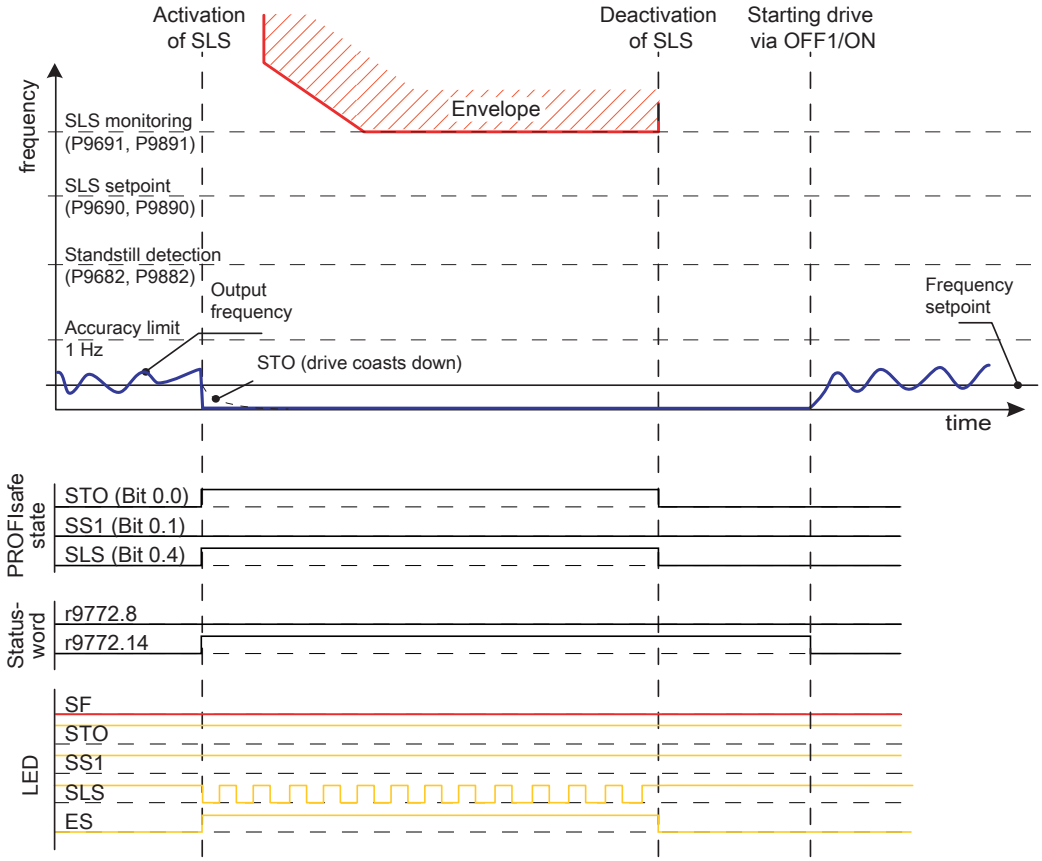

Figure 8-15 SLS Mode 0, case 4: accuracy limit > Frequency setpoint

SLS Mode 0, case 5.1: Frequency setpoint > SLS monitoring (p9691/p9891), primary fault

Activation of SLS =>	• SLS monitoring activated • SLS-LED flashing • Frequency setpoint deactivated • Monitored ramp down to standstill detection
When standstill detection is reached =>	• passivated STO activated
Deactivation of SLS =>	• To start again, the passivated STO must be acknowledged and a new on command is necessary to ramp up to frequency setpoint.

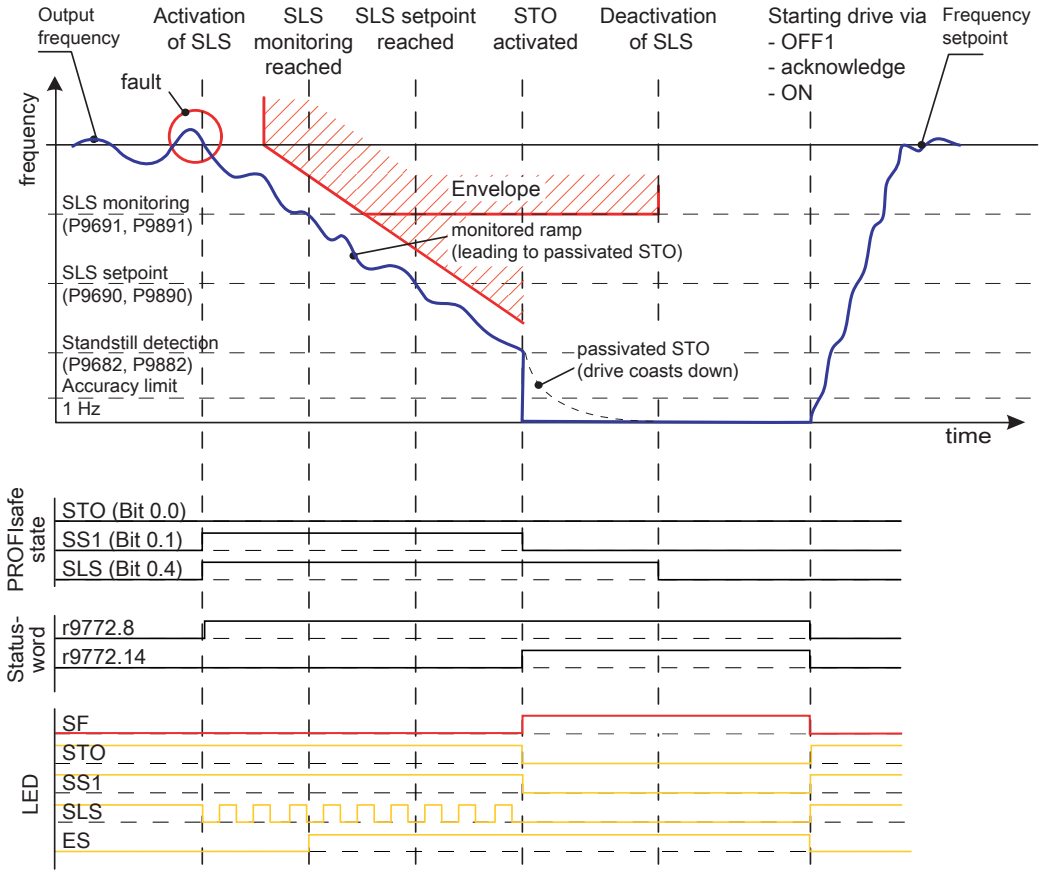

Figure 8-16 SLS Mode 0, case 5.1: Frequency setpoint > SLS monitoring (p9691/p9891), primary fault

SLS Mode 0, case 5.2: Frequency setpoint > SLS monitoring (p9691/p9891,) secondary fault

Activation of SLS =>	• SLS monitoring activated • SLS-LED flashing • Frequency setpoint deactivated • Monitored ramp down to standstill detection
When output frequency runs above SS1 ramp down monitoring before standstill detection is reached	• Frequency setpoint inactive • passivated STO activated immediately
Deactivation of SLS =>	• To start again, the passivated STO must be acknowledged and a new on command is necessary to ramp up to frequency setpoint.

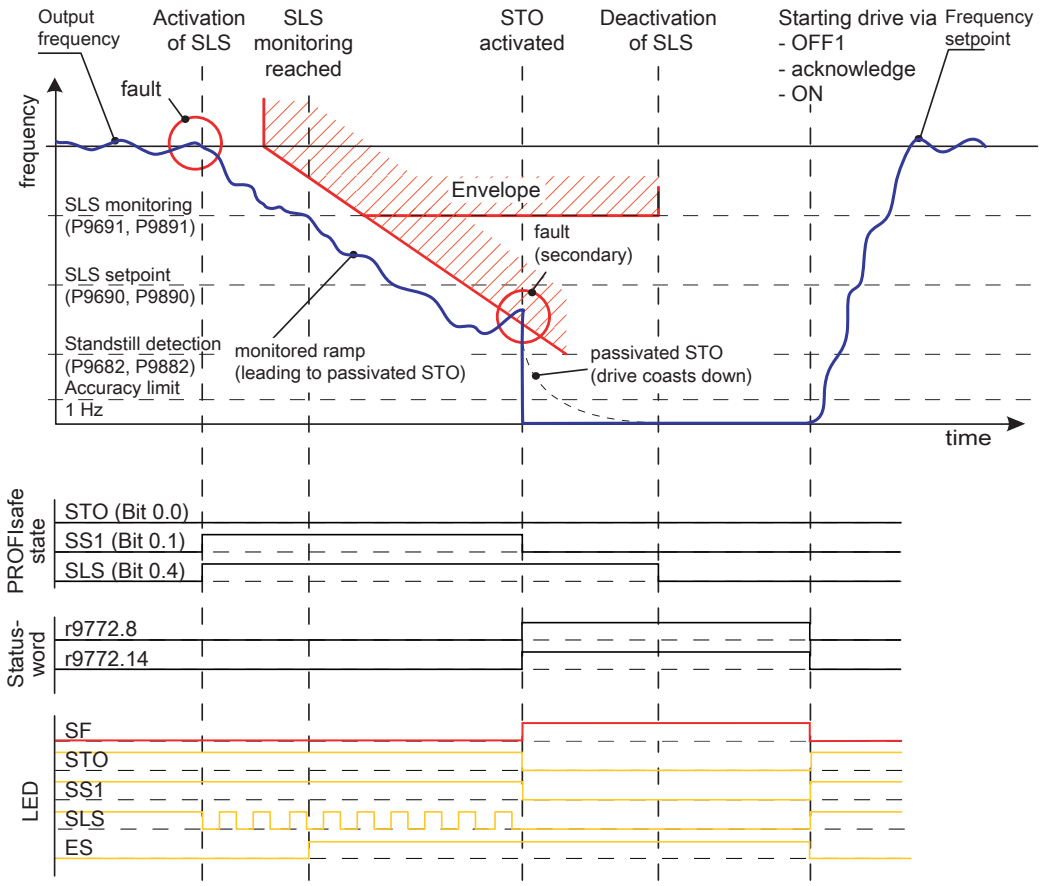

Figure 8-17 SLS Mode 0, case 5.2: Frequency setpoint > SLS monitoring (p9691/p9891), secondary fault

Note

It must be taken into account that with detecting a fault during the fail-safe function SLS mode 0 is active, first it will be tried to brake down the drive at the safe brake ramp.

The brake time is determined by parameters P9681/P9881. As the drive at this time is in a fail-safe mode, it is not possible to interrupt the braking ramp by another function (e.g. STO).

It is recommended to parameterize the shortest possible ramp time for the application.

8.6.2 Safely Limited Speed, Mode 1

SLS Mode 1, P9692 = P9892 = 1

In addition to the speed limit set in parameters P9691 and P9891, a further SLS setpoint can be set in parameters P9690 and P9890. This additional SLS setpoint is used to set the output frequency to a specific frequency, instead of bringing the motor to a standstill.

If the output frequency of the inverter falls below the SLS setpoint set in P9690 and P9890, the motor is allowed to run at that speed. See the following table.

If Safe Brake Control is activated, its status is indicated in the following figures via r9772.14:

- r9772.14 = 0 -> brake open
- r9772.14 = 1 -> brake closed.

SLS Mode 1, case 1: Frequency setpoint > SLS monitoring (p9691/p9891)

Activation of SLS =>	• SLS monitoring activated • SLS-LED flashing • Frequency setpoint deactivated • Ramp down with SS1 to standstill detection
When SLS setpoint is reached =>	• SLS monitoring on • ES-LED on
Deactivation of SLS =>	• To start again, the passivated STO must be acknowledged and a new on command is necessary to ramp up to frequency setpoint.

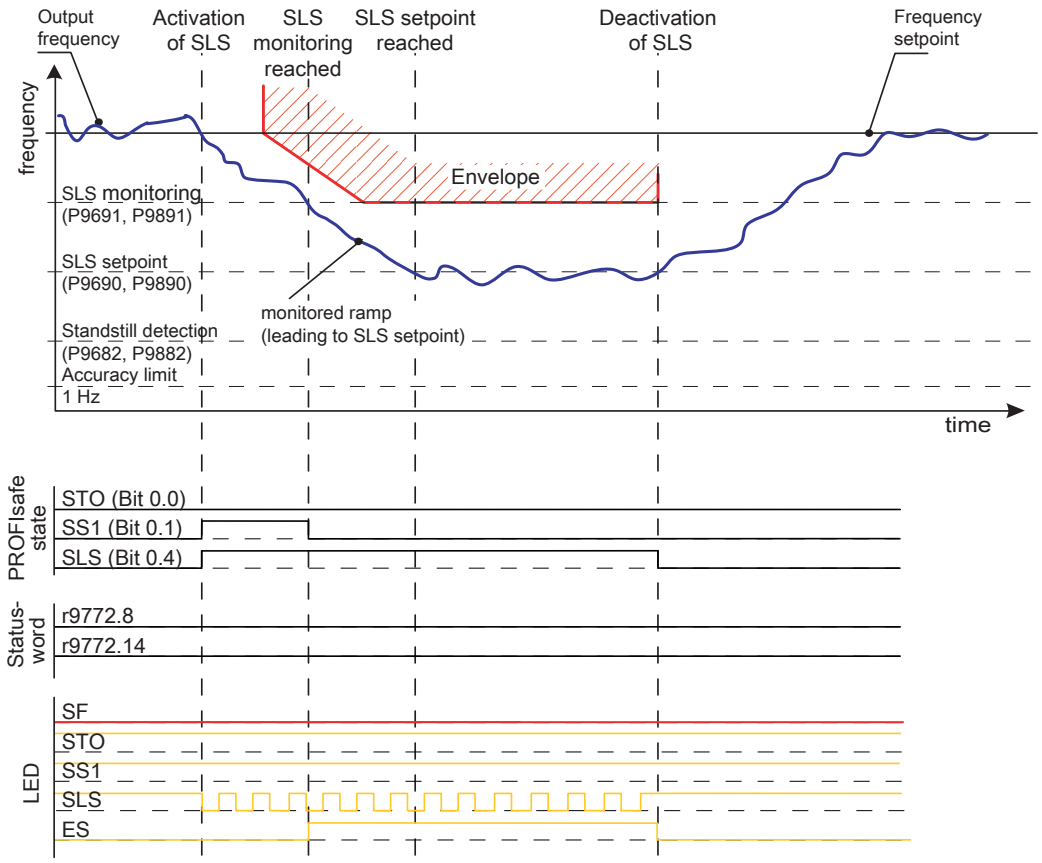

Figure 8-18 SLS Mode 1, case 1: Frequency setpoint > SLS monitoring (p9691/p9891)

SLS Mode 1, case 2: SLS monitoring (p9691/p9891) > Frequency setpoint > SLS setpoint

Activation of SLS =>	• SLS monitoring activated • SLS-LED flashing • Frequency setpoint deactivated • Ramp down with SS1 to SLS setpoint
When SLS setpoint is reached =>	• SLS monitoring on • ES-LED on
Deactivation of SLS =>	• SLS monitoring off • SLS-LED and ES-LED off • activate freq. setpoint and ramp to freq. setpoint

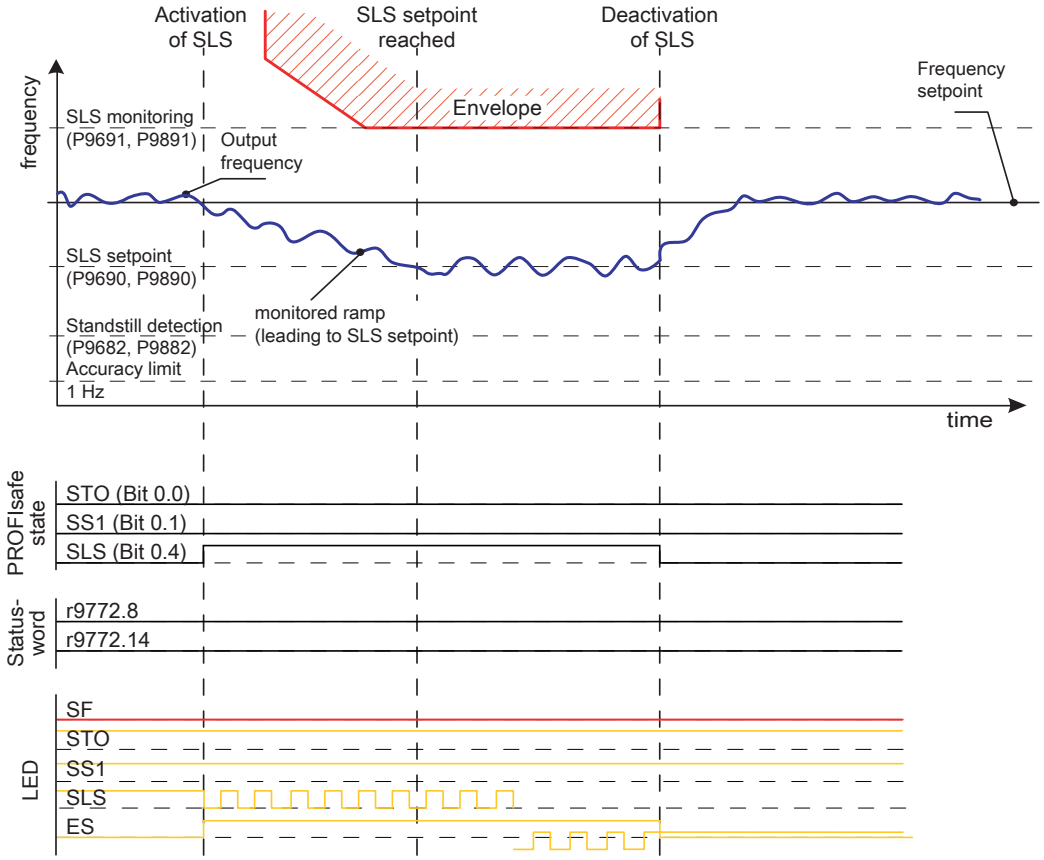

Figure 8-19 SLS Mode 1, case 2: SLS monitoring (p9691/p9891) > Frequency setpoint > SLS setpoint

SLS Mode 1, case 3: SLS setpoint > Frequency setpoint > standstill detection (p9682/p9882)

Activation of SLS =>
- SLS monitoring activated
- SLS-LED flashing
- ES-LED on
- Frequency setpoint deactivated

Deactivation of SLS =>
- SLS monitoring off
- SLS-LED and ES-LED off
- activate freq. setpoint and ramp to freq. setpoint

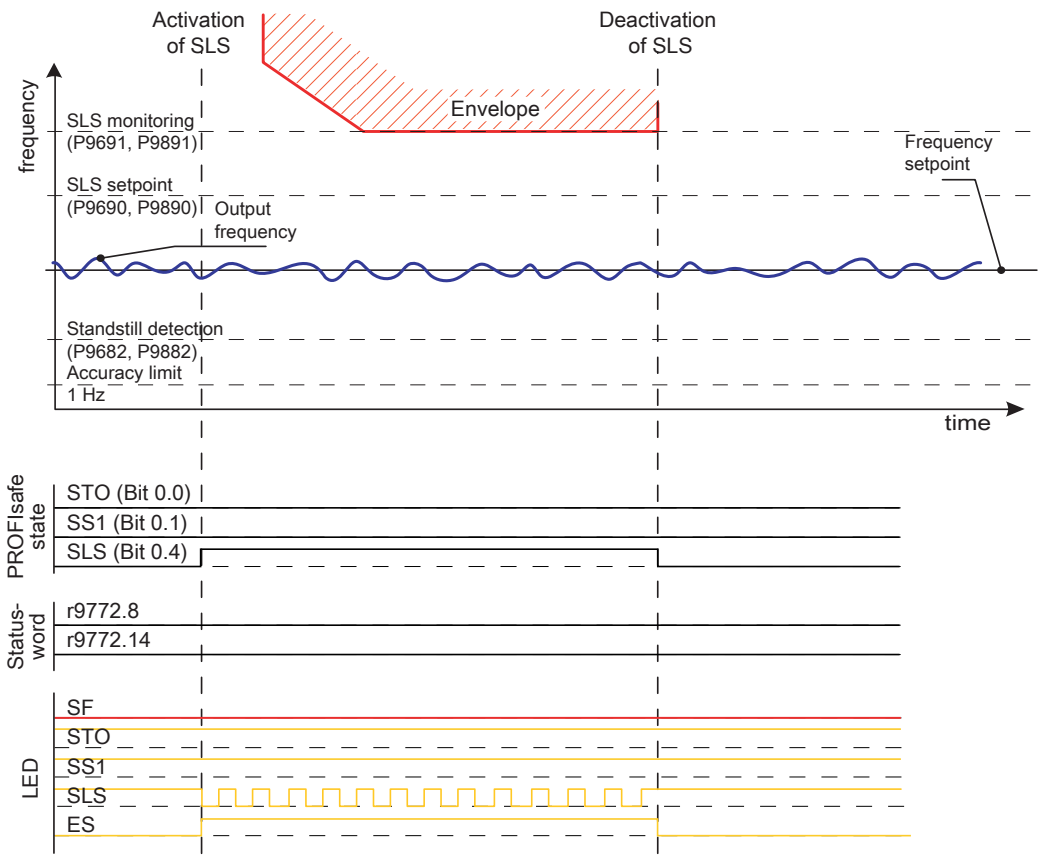

Figure 8-20 SLS Mode 1, case 3: SLS setpoint > Frequency setpoint > standstill detection (p9682/p9882)

SLS Mode 1, case 4: Standstill detection (p9682/p9882) > Frequency setpoint > accuracy limit

Activation of SLS =>

- SLS monitoring activated
- SLS-LED flashing
- ES-LED on
- Frequency setpoint deactivated

Deactivation of SLS =>

- SLS monitoring off
- SLS-LED and ES-LED off
- activate freq. setpoint and ramp to freq. setpoint

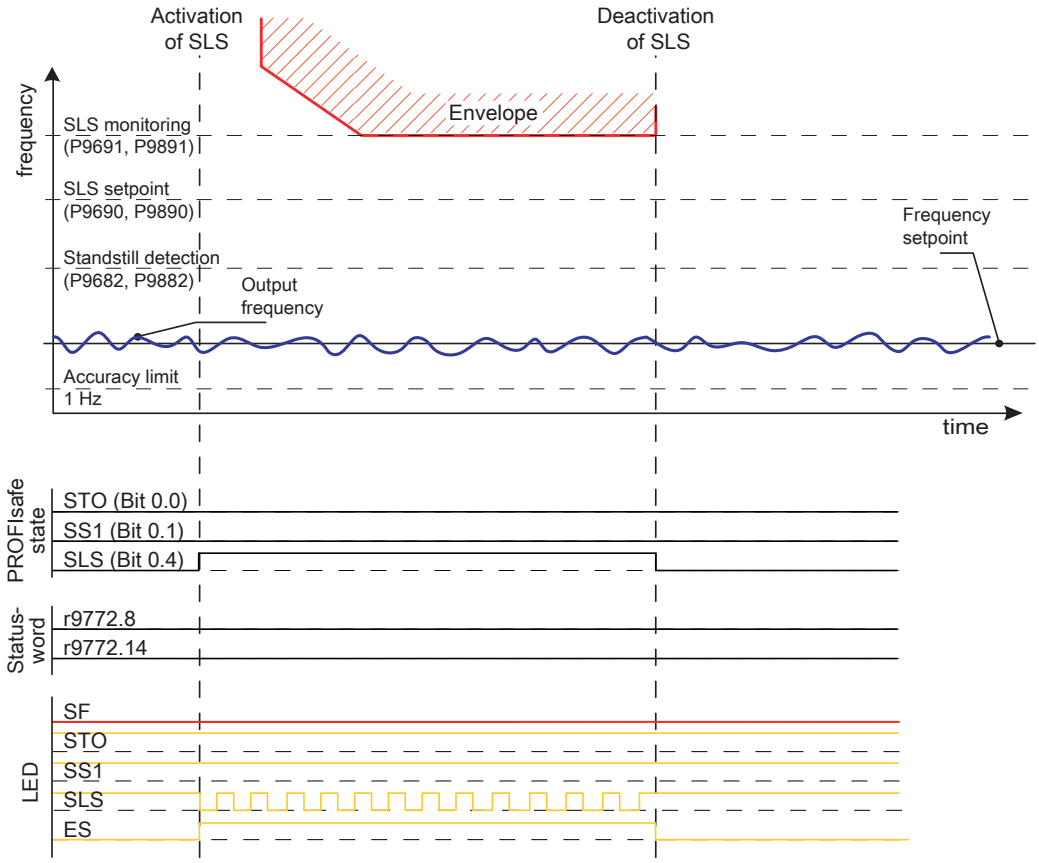

Figure 8-21 SLS Mode 1, case 4: Standstill detection (p9682/p9882) > Frequency setpoint > accuracy limit

SLS Mode 1, case 5: accuracy limit > Frequency setpoint

Activation of SLS =>
- SLS monitoring activated
- SLS-LED flashing
- ES-LED on
- Frequency setpoint deactivated

Deactivation of SLS =>
- SLS monitoring off
- SLS-LED and ES-LED off
- activate freq. setpoint and ramp to freq. setpoint

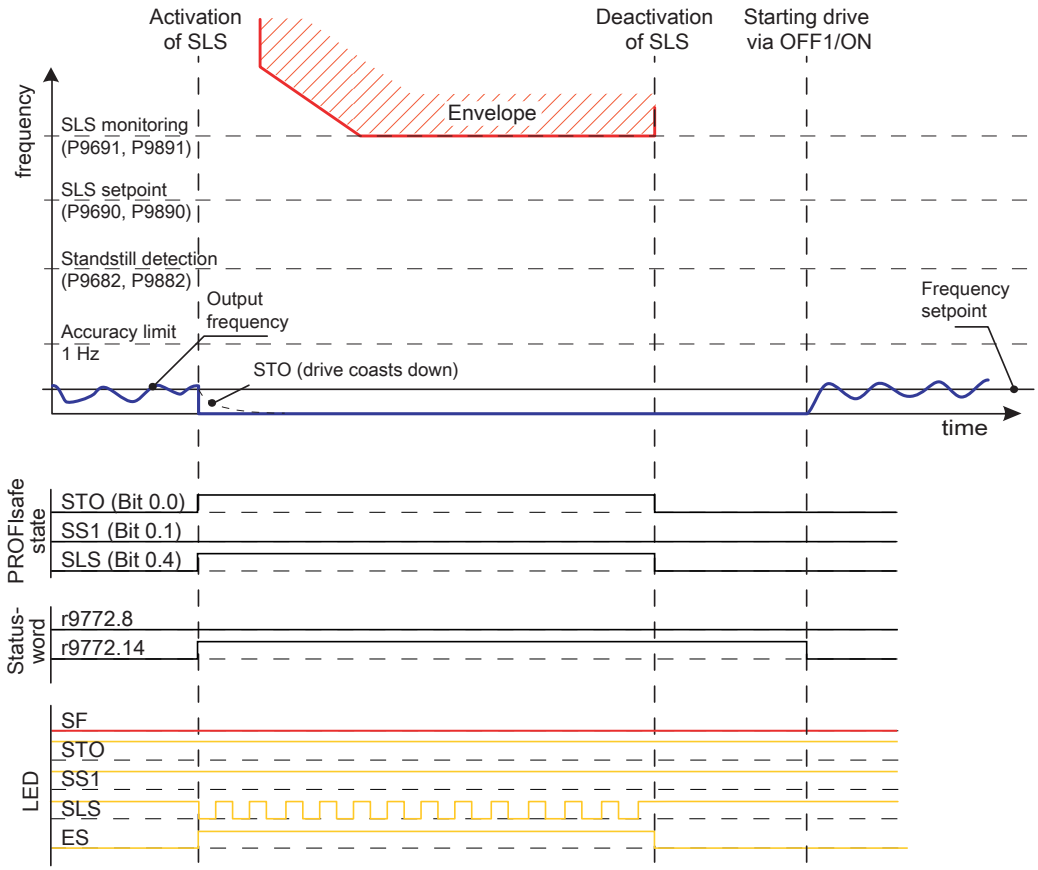

Figure 8-22 SLS Mode 1, case 5: accuracy limit > Frequency setpoint

SLS Mode 1, case 6: Frequency setpoint > SLS monitoring (p9691/p9891), primary fault

Activation of SLS =>

- SLS monitoring activated
- STO activated
- SLS-LED flashing
- ES-LED on
- Frequency setpoint deactivated

Deactivation of SLS =>

- To start again, the passivated STO must be acknowledged and a new on command is necessary to ramp up to frequency setpoint.

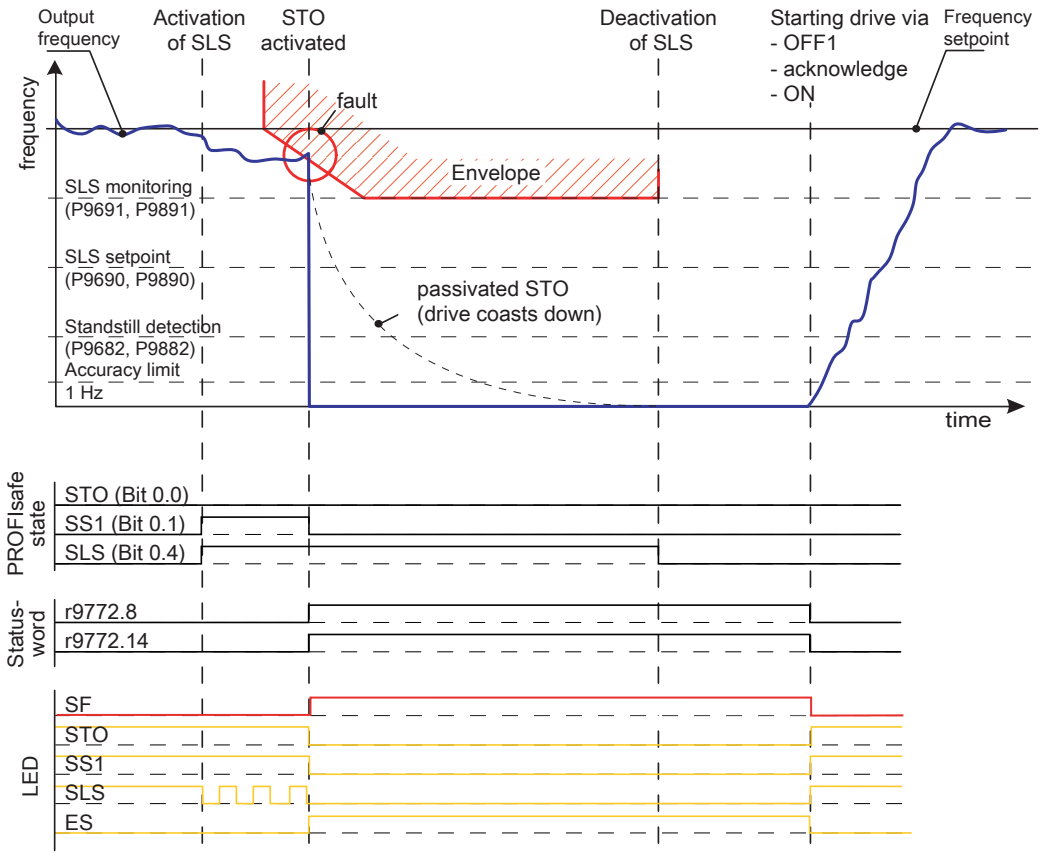

Figure 8-23 SLS Mode 1, case 6: Frequency setpoint > SLS monitoring (p9691/p9891), primary fault

SLS Mode 1, case 7: SLS setpoint > Frequency setpoint > standstill detection (p9682/p9882), primary fault

Activation of SLS =>	• SLS monitoring activated • SLS-LED flashing • Frequency setpoint deactivated
When output frequency runs above SLS monitoring	• passivated STO activated immediately
Deactivation of SLS =>	• To start again, the passivated STO must be acknowledged and a new on command is necessary to ramp up to frequency setpoint.

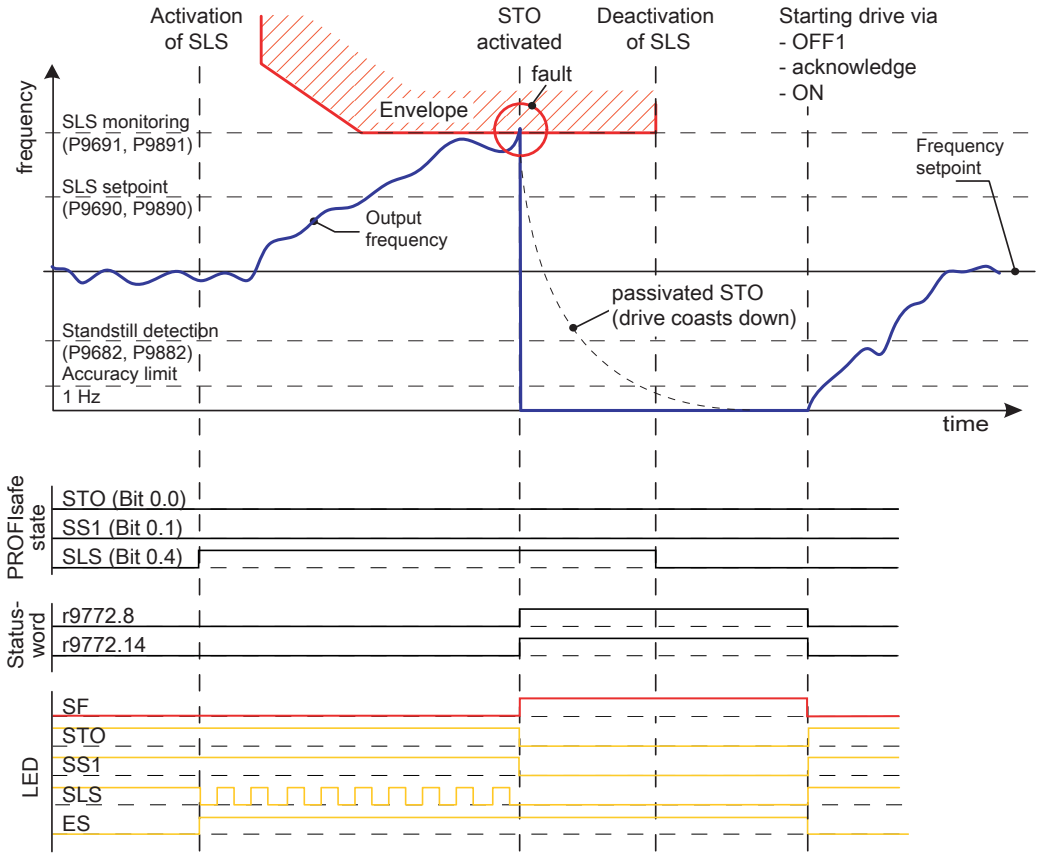

Figure 8-24 SLS Mode 1, case 7: SLS setpoint > Frequency setpoint > standstill detection (p9682/p9882), primary fault

8.6.3 Safely Limited Speed, Mode 2

SLS Mode 2, P9692 = P9892 = 2

In SLS mode 2, only the monitoring ramp (envelope) is activated.

⚠ WARNING
Safe brake ramp not activated SLS mode 2 means that the safe brake ramp is not activated, therefore it is the users responsibility to ensure that the motor is ramped down to or below the SLS setpoint.

Note

If in the SLS mode 2 one of the functions Pre-Control (P1496 > 0), VC or SLVC (P1300 > 19) is active, dynamic setpoint jumps can lead to a passivated STO.

If the output frequency exceeds the SLS monitoring set in P9691 and P9891, the motor must be ramped down using an external control channel (e.g. a PLC, potentiometer or USS etc.). If the control channel tries to set the output frequency to exceed the SLS monitoring, this will be interpreted as a fault condition and the motor will be stopped and passivated. To start the motor again, the fault condition needs to be explicitly acknowledged. See the following table.

If the Safe Brake Control is activated, its status is indicated in the following figures via r9772.14:

- r9772.14 = 0 -> brake open
- r9772.14 = 1 -> brake closed.

SLS Mode 2, case 1: Frequency setpoint > SLS monitoring

Activation of SLS =>
- SLS monitoring activated
- SLS-, STO- and SS1-LED off
- passivated STO is triggered

Deactivation of SLS =>
- SLS monitoring off
- To start again, the passivated STO must be acknowledged and a new ON command is necessary to ramp up to frequency setpoint.

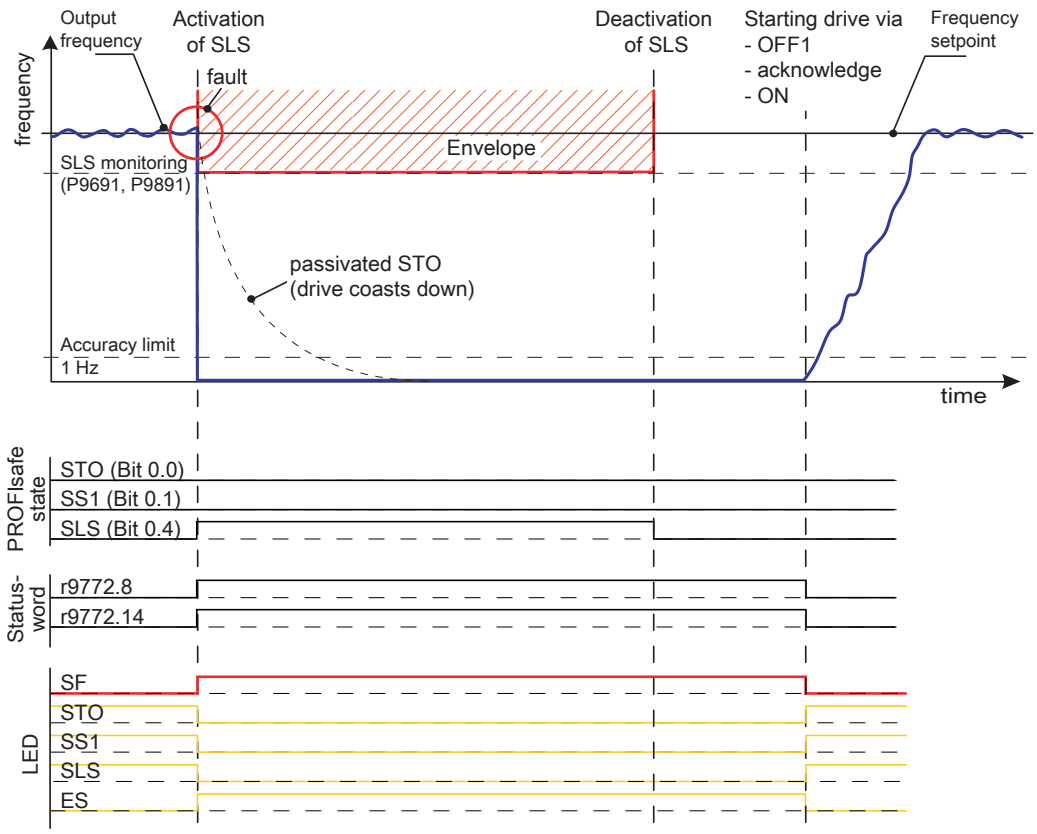

Figure 8-25 SLS Mode 2, case 1: Frequency setpoint > SLS monitoring

SLS Mode 2, case 2: SLS monitoring > Frequency setpoint > accuracy limit

Activation of SLS =>
- SLS monitoring activated
- SLS-LED flashing

Deactivation of SLS =>
- SLS monitoring off
- SLS-LED off

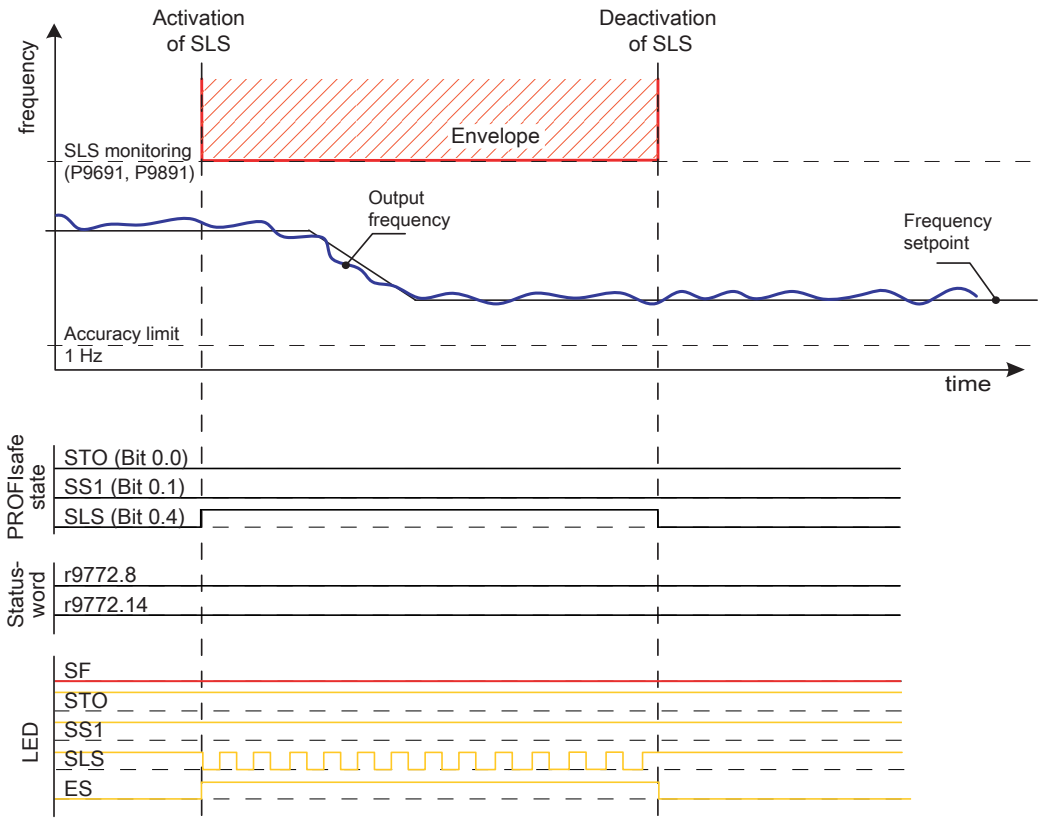

Figure 8-26 SLS Mode 2, case 2: SLS monitoring > Frequency setpoint > accuracy limit

SLS Mode 2, case 3: accuracy limit > Frequency setpoint

Activation of SLS =>
- SLS monitoring activated
- SLS-LED flashing

If frequency setpoint falls below accuracy limit, a passivated STO is triggered immediately

Deactivation of SLS =>
- SLS monitoring off
- SLS-LED off
- To start again, the passivated STO must be acknowledged and a new ON command is necessary to ramp up to frequency setpoint.

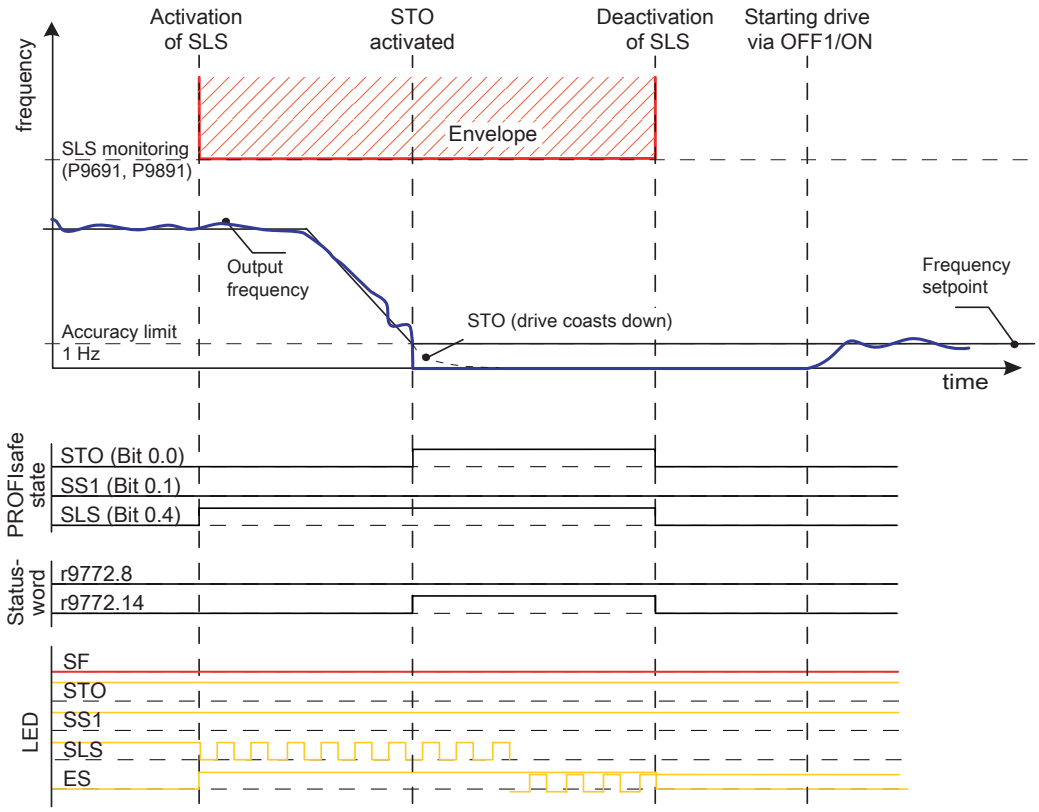

Figure 8-27 SLS Mode 2, case 3: accuracy limit > Frequency setpoint

SLS Mode 2, case 4: SLS monitoring > Frequency setpoint

Activation of SLS =>
- SLS monitoring activated
- SLS-LED flashing

If frequency setpoint runs above SLS monitoring an STO is triggered immediately

Deactivation of SLS =>
- SLS monitoring off
- To start again, STO must be acknowledged and a new ON command is necessary to ramp up to frequency setpoint.

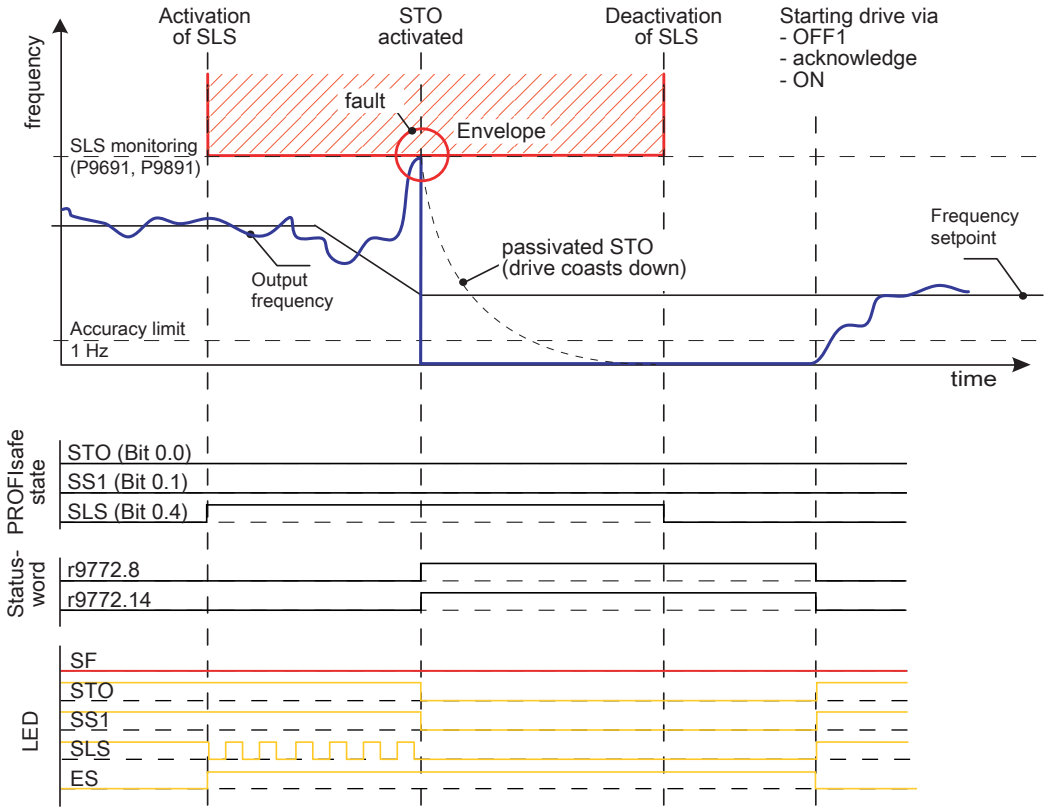

Figure 8-28 SLS Mode 2, case 4: SLS monitoring > Frequency setpoint

8.6.4 Safely Limited Speed, Mode 3

SLS Mode 3, P9692 = P9892 = 3

Mode 3 is similar to mode 2. Contrary to mode 2 reversing of direction is possible as well as starting with an ON command while SLS Mode 3 monitoring is active.

⚠ WARNING

Safe brake ramp not activated

In mode 3 the safe brake ramp is not activated. Therefore it is the users responsibility to ensure that the motor is ramped down to or below the SLS setpoint

Note

If in the SLS mode 3 one of the functions Pre-Control (P1496 > 0), VC or SLVC (P1300 > 19) is active, dynamic setpoint jumps can lead to a passivated STO.

If the output frequency exceeds the SLS monitoring set in P9691 and P9891, the motor must be ramped down using an external control channel (e.g. a PLC, potentiometer or USS etc.). If the control channel tries to set the output frequency to exceed the SLS monitoring, this will be interpreted as a fault condition and the motor will be stopped and passivated. To start the motor again, the fault condition needs to be explicitly acknowledged. See the following table.

If the Safe Brake Control is activated, its status is indicated in the following figures via r9772.14:

- r9772.14 = 0 -> brake open
- r9772.14 = 1 -> brake closed.

SLS Mode 3, case 1: Frequency setpoint > SLS monitoring

Activation of SLS =>
- SLS monitoring activated
- SLS-, STO- and SS1-LED off
- passivated STO is triggered

Deactivation of SLS =>
- SLS monitoring off
- To start again, the passivated STO must be acknowledged and a new ON command is necessary to ramp up to frequency setpoint.

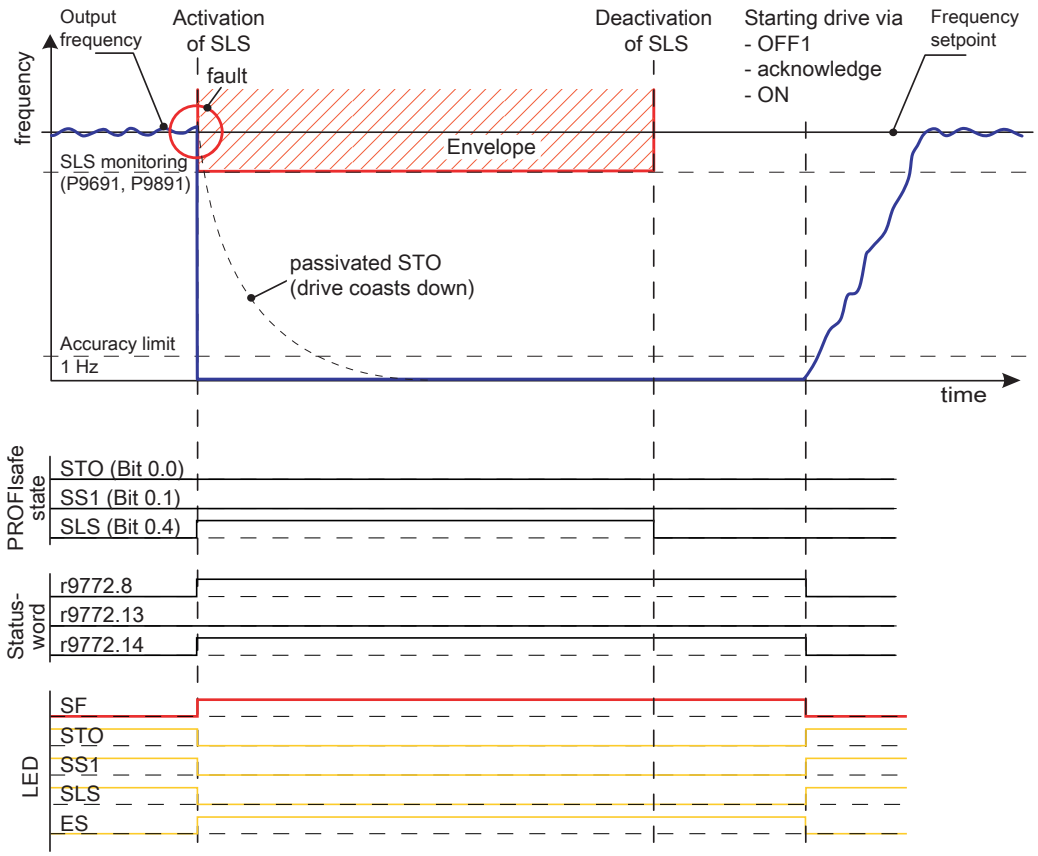

Figure 8-29 SLS Mode 3, case 1: Frequency setpoint > SLS monitoring

SLS Mode 3, case 2: SLS monitoring > Frequency setpoint > accuracy limit

Activation of SLS =>
- SLS monitoring activated
- SLS-LED flashing

Deactivation of SLS =>
- SLS monitoring off
- SLS-LED off

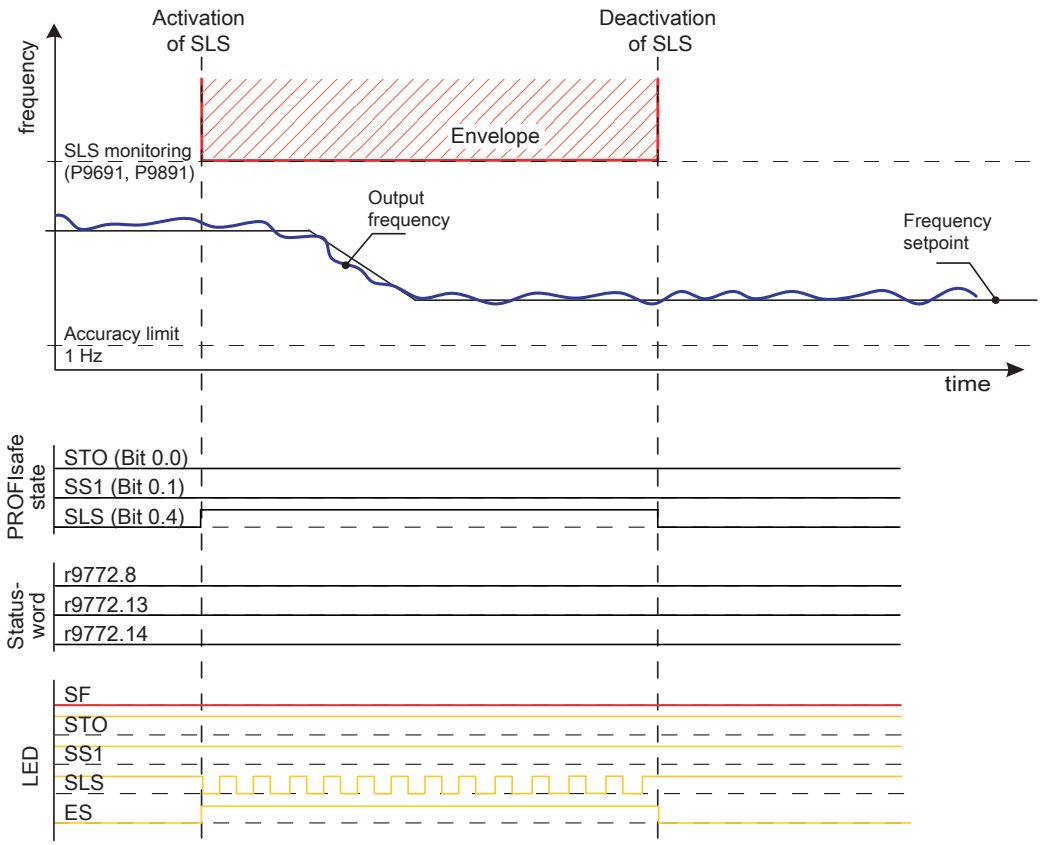

Figure 8-30 SLS Mode 3, case 2: SLS monitoring > Frequency setpoint > accuracy limit

SLS Mode 3, case 3:	activation of SLS, followed by an OFF1/OFF3 command => Frequency setpoint drops below accuracy limit => STO, followed by deactivation of SLS and renewed activation of SLS => restart requires ON command
Activation of SLS =>	• SLS monitoring activated • SLS-LED flashing
OFF1/OFF3 command	• Frequency setpoint drops below accuracy limit • STO activated if frequency drops below accuracy limit
Deactivation of SLS =>	• SLS monitoring off • SLS-LED off
Activation of SLS =>	• SLS monitoring activated • SLS-LED flashing • To start again, a new ON command is necessary. If - after 5 s - the output frequency is above accuracy limit the inverter operates in SLS mode 3 otherwise an STO will be triggered immediately.

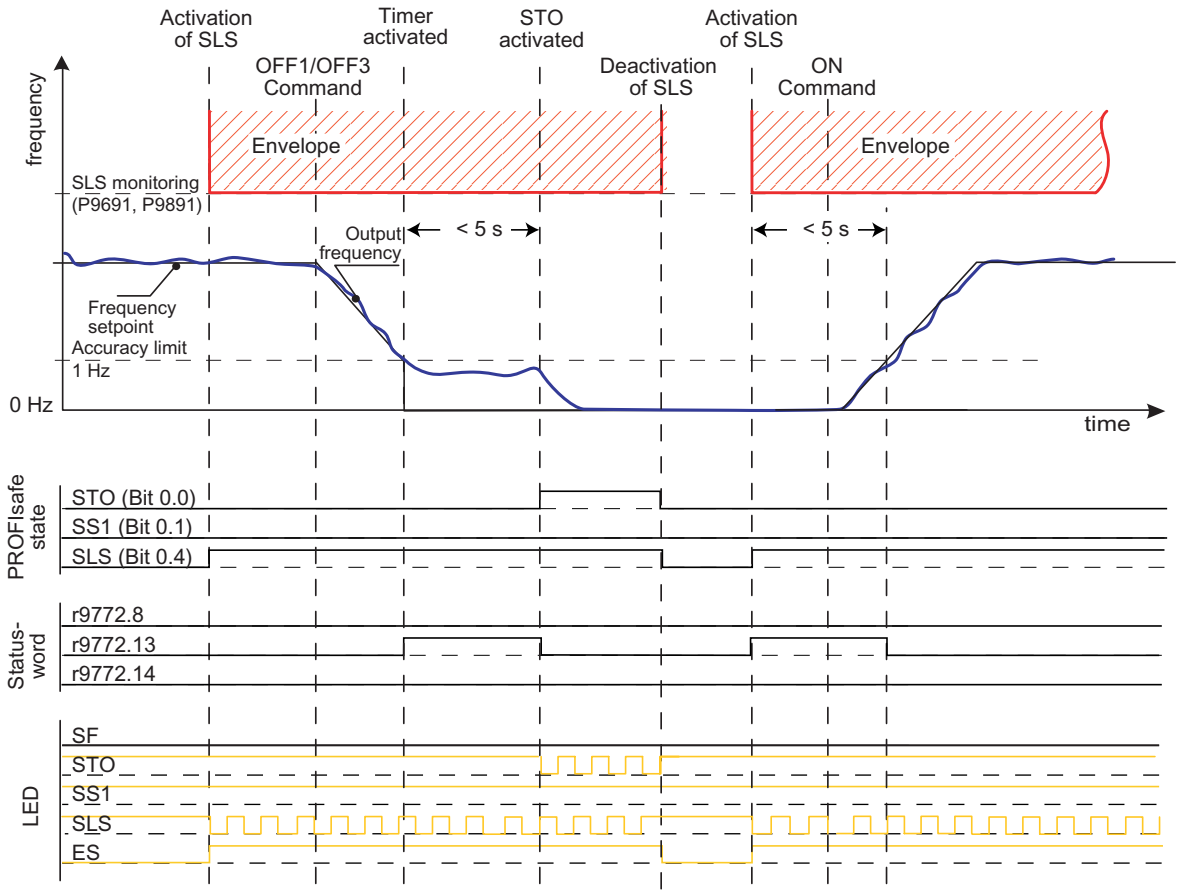

Figure 8-31 SLS Mode 3, case 3: Frequency setpoint drops below accuracy limit after activation of SLS

SLS Mode 3, case 4:	activation of SLS, followed by an OFF1/OFF3 command => Frequency setpoint drops below accuracy limit => STO, followed by activation and deactivation of STO through the user => restart requires ON command
Activation of SLS =>	• SLS monitoring activated • SLS-LED flashing
OFF1/OFF3 command	• Frequency setpoint drops below accuracy limit • STO activated if frequency drops below accuracy limit
Activation of STO =>	• SLS monitoring still activated • Envelope still activated
Deactivation of STO =>	• STO is deactivated • Timer is started • To start again, a new ON command is necessary. If - after 5 s - the output frequency is above accuracy limit the inverter operates in SLS mode 3 otherwise an STO will be triggered immediately.

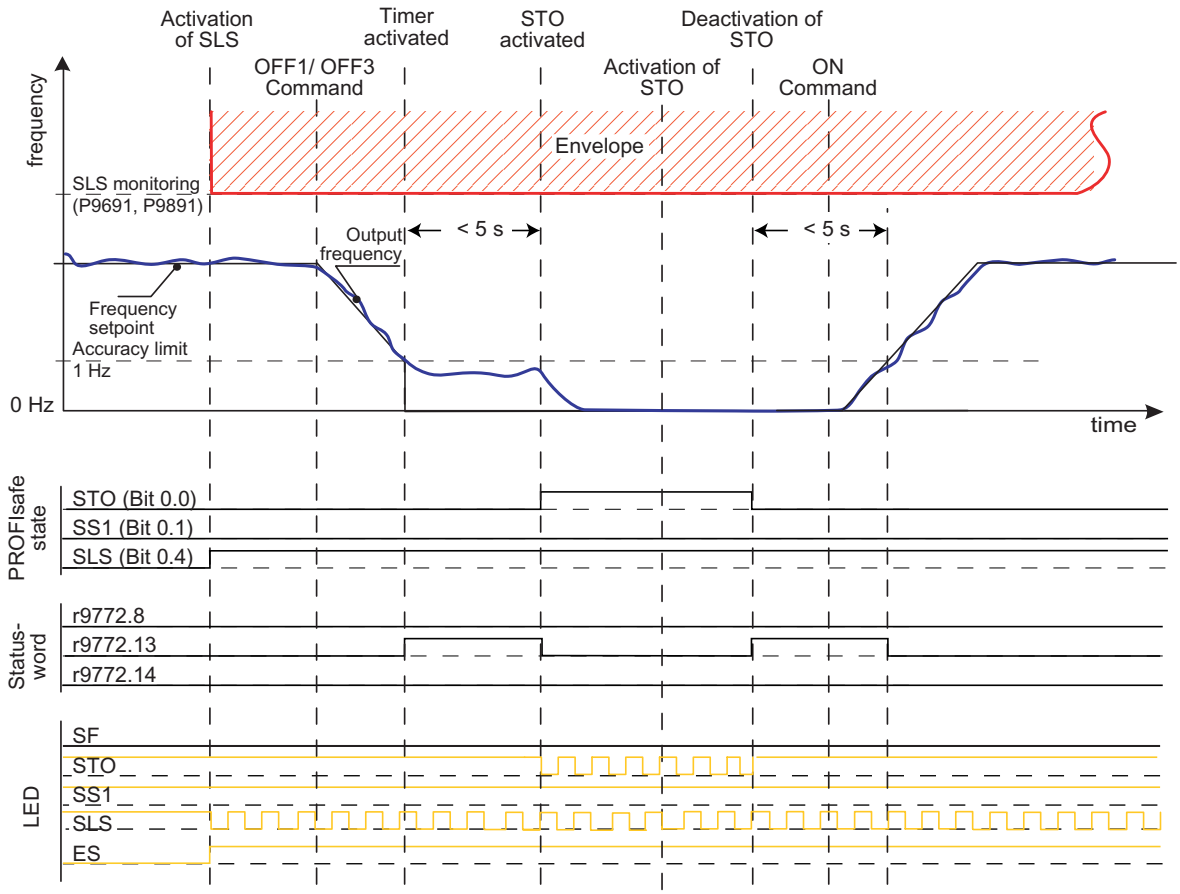

Figure 8-32 SLS Mode 3, case 4: Frequency setpoint drops below accuracy limit with user activation of STO

SLS Mode 3, case 5: Activation of SLS with SLS monitoring > frequency setpoint > accuracy limit - followed by setpoint inversion

Activation of SLS =>
- SLS monitoring activated
- SLS-LED flashing

Setpoint inversion, with |SLS monitoring| > |$fset_{new}$| > |accuracy limit|. If it takes 5 s or more from accuracy limit (1 Hz) to the inverse accuracy limit (-1Hz) the inverter trips, otherwise it will operate without tripping.

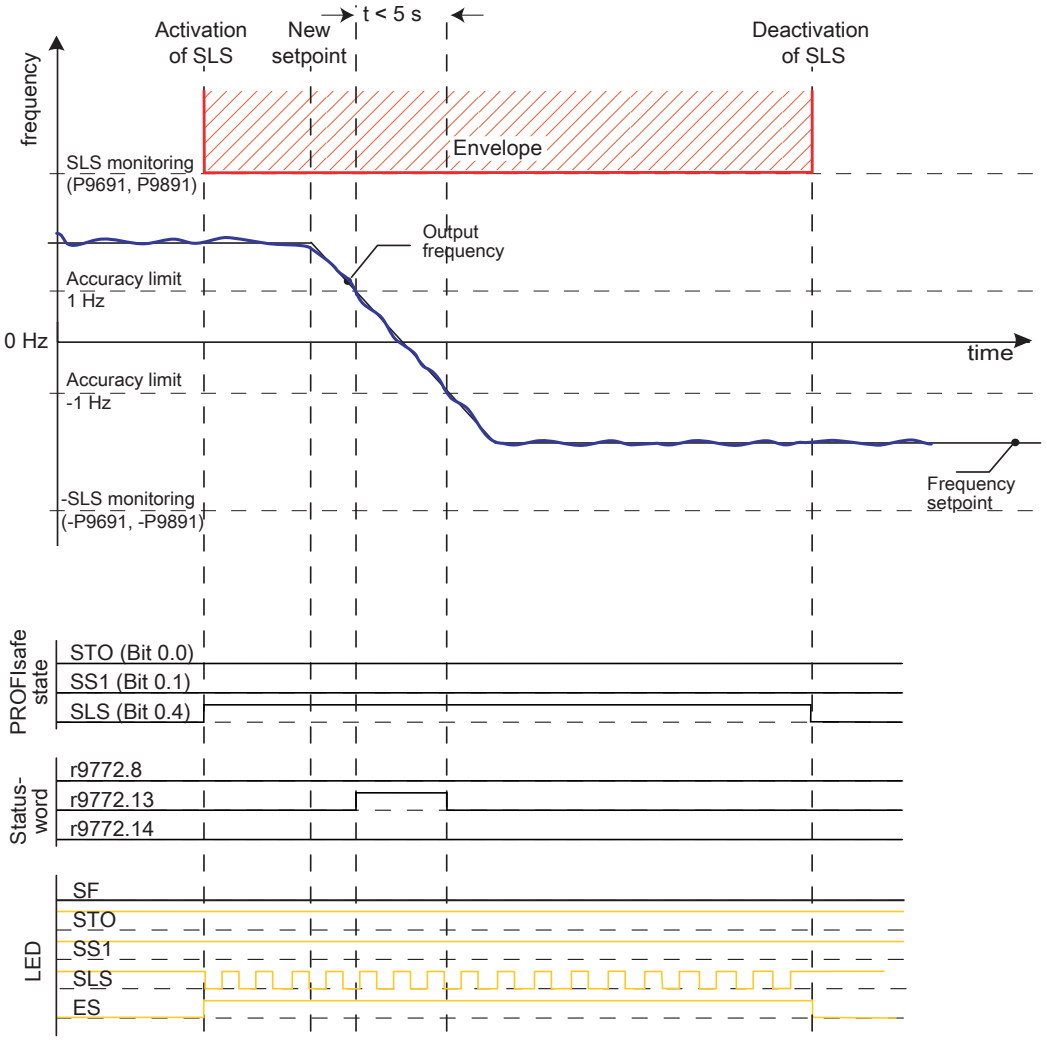

Figure 8-33 SLS Mode 3, case 5: Activation of SLS with zero crossing

SLS Mode 3, case 6: Activation of SLS with SLS monitoring > frequency setpoint > accuracy limit - followed by new setpoint

Activation of SLS =>
- SLS monitoring activated
- SLS-LED flashing

New setpoint. If the new setpoint is below the accuracy limit a 5 s timer starts. If the setpoint is still below the accuracy limit the inverter trips with STO.

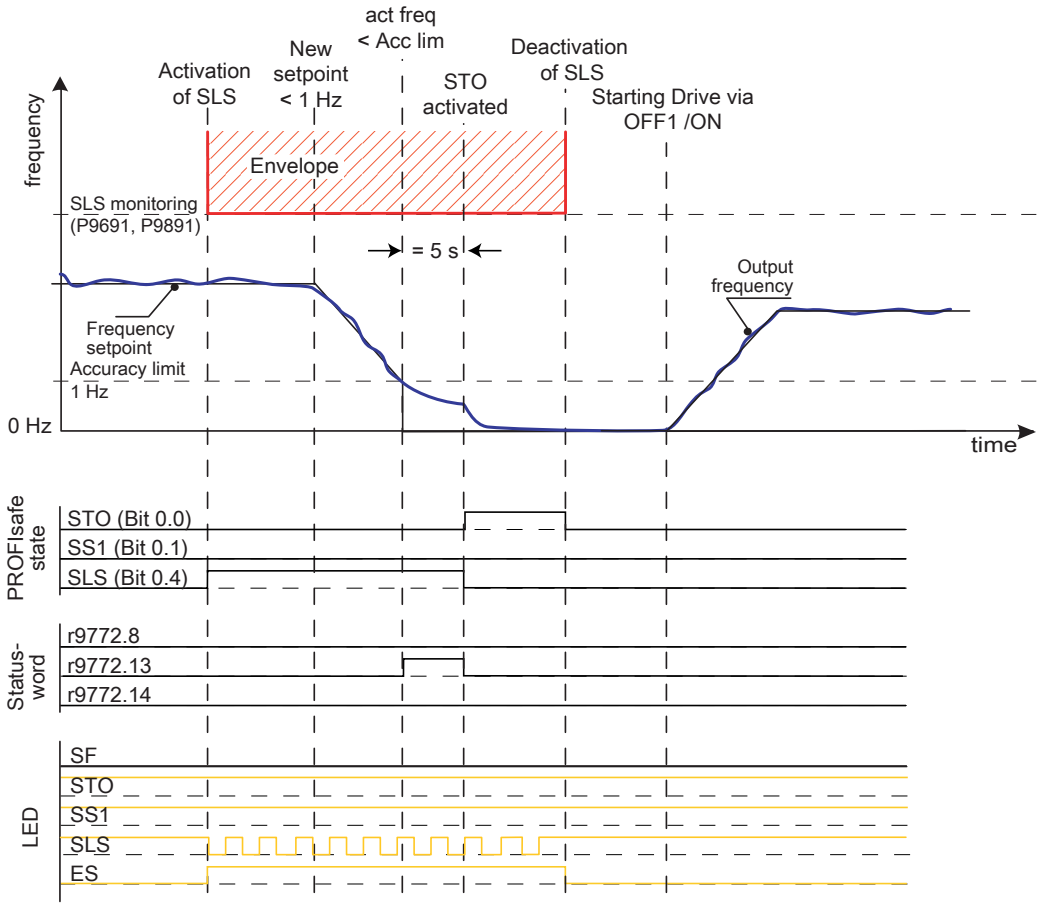

Figure 8-34 SLS Mode 3, case 6: New setpoint (< accuracy limit) after activation of SLS

SLS Mode 3, case 7: SLS monitoring > Frequency setpoint

Activation of SLS =>
- SLS monitoring activated
- SLS-LED flashing

If frequency setpoint runs above SLS monitoring an STO is triggered immediately

Deactivation of SLS =>
- SLS monitoring off
- To start again, passivated STO must be acknowledged and a new ON command is necessary to ramp up to frequency setpoint.

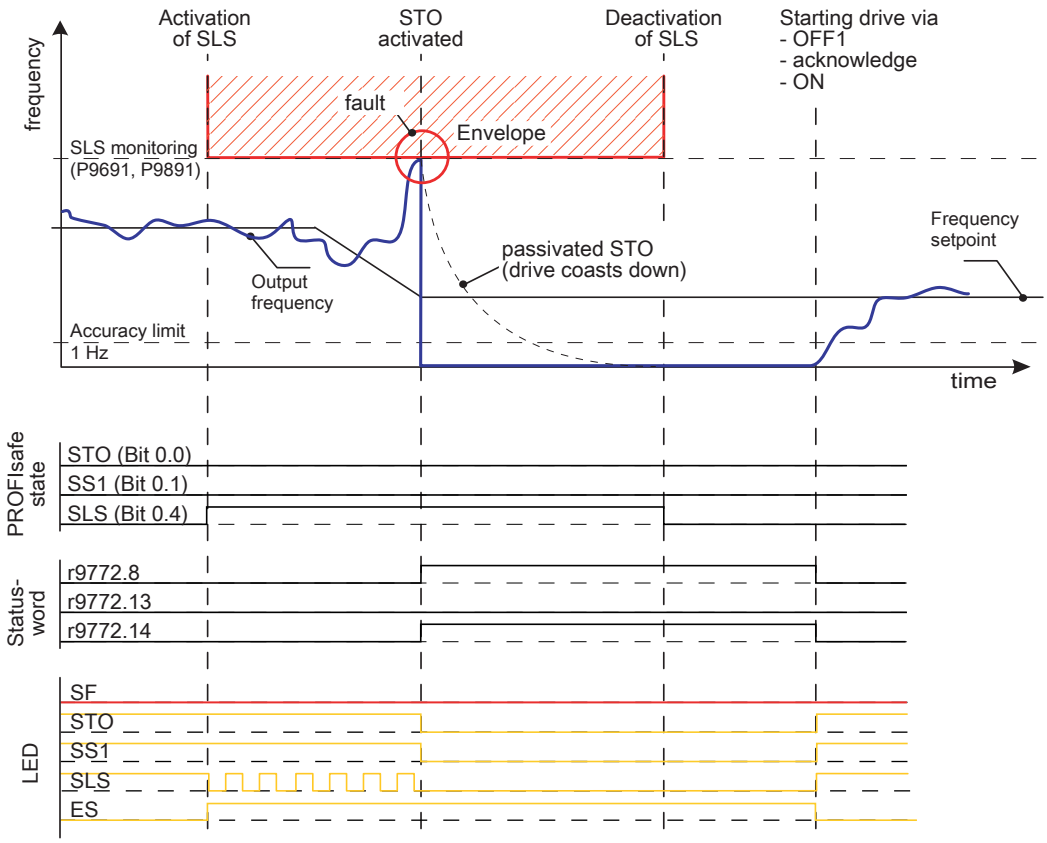

Figure 8-35 SLS Mode 3, case 7: SLS monitoring > Frequency setpoint

8.7 Safe Brake Control

Data

Parameter range:	P0003, P0010, P1215
	P9601/P9801
	P9602/P9802
	P9761, P9799/P9899, r9798/r9898, P3900
Warnings	A1691, A1692, A1696, A1699
Faults	F1600, F1616, F1630

Description

The Safe Brake Control Function (SBC) was implemented to generate a fail-safe signal to control an EM brake.

Prerequisite: P1215 = 1 and the optional Safe Brake Control Relay

To activate the Safe Brake Control function, the following parameters must be set:
P9602 = P9802 = 1 (factory setting is 0).

In case of P9602 = P9802 = 1 a feedback signal of the Safe Brake Control is monitored. This tests the signal circuitry not the EM brake itself.

This test signal does not interfere with the normal function of the mechanical brake. If the mechanical brake is fitted and the test fails, a fault condition will be indicated by the inverter.

Note

When carrying-out the forced dynamization, the shutdown paths of the motor brake are also tested. This results a brief opening command (2 ms to 28 ms) in the motor brake.

The mechanical part of the brake generally requires longer than 30 ms to open. This means that this dynamic operation generally has no influence on the motor shaft itself. However it is the user's responsibility to use brakes with opening times > 30 ms.

The SBC will be activated in the following cases:

- STO
- passivated STO
- SS1

The SBC state is indicated in r9772.14. If SBC is disabled by P9602 = P9802 = 0 then r9772.14 is 0 (brake open) even if the brake is closed from a non-safe brake control (e.g. MHB). The fault F1630 will occur in case an error happens.

Power module dependent functions 9

9.1 Electronic Brakes

Overview

The inverters have three electronic braking technologies:

- DC braking
- Compound braking

These brakes can actively brake the motor and avoid a possible DC link overvoltage condition. The figure below shows the inter-dependency of the electronic braking functions.

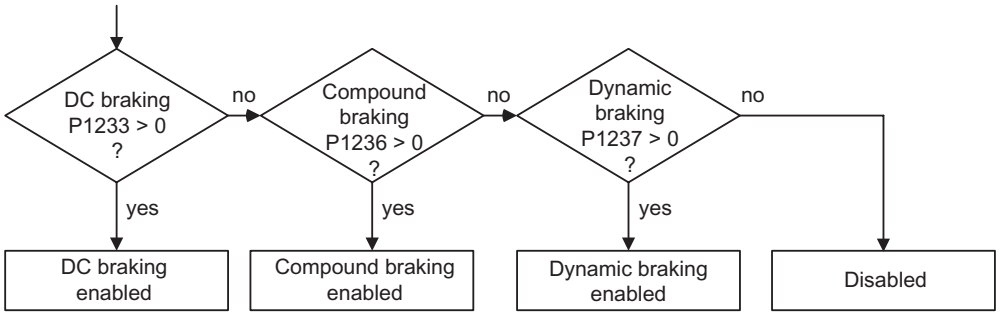

Figure 9-1 Inter-dependency of electronic brakes

9.1.1 DC braking

Data

Parameter range:	P1230, P1233 P1232, P1234 r0053 Bit00
Warnings:	-
Faults:	-
Function chart number:	-

Description

The motor decelerates along a parameterized braking ramp if an OFF1 or OFF3 command is output. A "flat" ramp must be selected so that the inverter is not tripped (shutdown) due to the high regenerative energy which would cause a DC link overvoltage condition. The DC brake should be activated while the OFF1 or OFF3 command is present if the motor is to be braked faster. For DC braking, instead of continually reducing the output frequency/voltage during the OFF1 or OFF3 phase, from a selectable frequency, a DC voltage/current is input (refer to sequence 1).

The motor can be brought to a standstill in the shortest time using DC current braking (DC brake). DC braking is selected as follows:

- After OFF1 or OFF3 (the DC brake is released via P1233) – Sequence 1
- Directly selected using BICO parameter P1230 – Sequence 2

For DC braking, a DC current is impressed in the stator winding which results in a significant braking torque for an induction motor. The magnitude, duration and frequency at which braking starts can be set for the braking current and therefore braking torque by setting the appropriate parameters. The DC brake can therefore support a braking operation from approx. < 10 Hz or prevents / minimizes the increase in the DC link voltage for regenerative braking. This is realized because energy is directly absorbed in the motor. The essential advantage and the main application of the DC brake is the fact that a holding torque can be generated at standstill (0 Hz). For instance, this is important forapplications where after positioning, any motion in the mechanical system / product itself can result in waste.

DC braking is especially used for:

- Centrifuges
- Saws
- Grinding machines
- Conveyor belts

Sequence 1

1. Enabled using P1233
2. DC braking is activated with the OFF1 or OFF3 command (see figure below)
3. The inverter frequency is ramped down along the parameterized OFF1 or OFF3 ramp down to the frequency at which DC braking is to start - P1234. This means that the kinetic energy of the motor can be reduced without endangering the inverter. However, if the ramp-down time is too short, there is a danger that a fault will be output as a result of an overvoltage condition in DC link - F0002.
4. The inverter pulses are inhibited for the duration of the de-magnetizing time P0347.
5. The required braking current P1232 is then impressed for the selected braking time P1233. The status is displayed using signal r0053 bit 00.

The inverter pulses are inhibited after the braking time has expired.

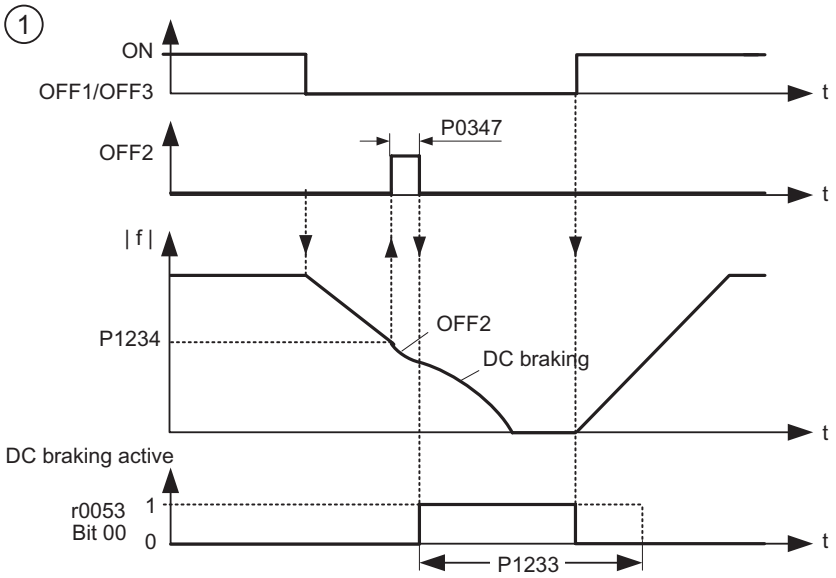

Figure 9-2 DC braking after OFF1/OFF3

Sequence 2

1. Enabled and selected using BICO parameter P1230 (see figure below).
2. The inverter pulses are inhibited for the duration of the de-magnetizing time P0347.
3. The requested braking current P1232 is impressed as long as DC braking is enabled (P1230 = 1) and the motor is braked. This state is displayed using signal r0053 bit 00.
4. After DC braking has been cancelled, the motor accelerates back to the setpoint frequency until the motor speed matches the inverter output frequency. If there is no match, then there is danger that a fault will be output as a result of overcurrent - F0001. This can be avoided by activating the flying restart function.
5. If any fault occurs during P1230 = 1 the DC current is set to zero. The motor doesn't ramp up even the fault is acknowledged. A new ON command is necessary.
6. If the DC brake is enabled again, the braking current P1232 is impressed as long as P1230 = 1.

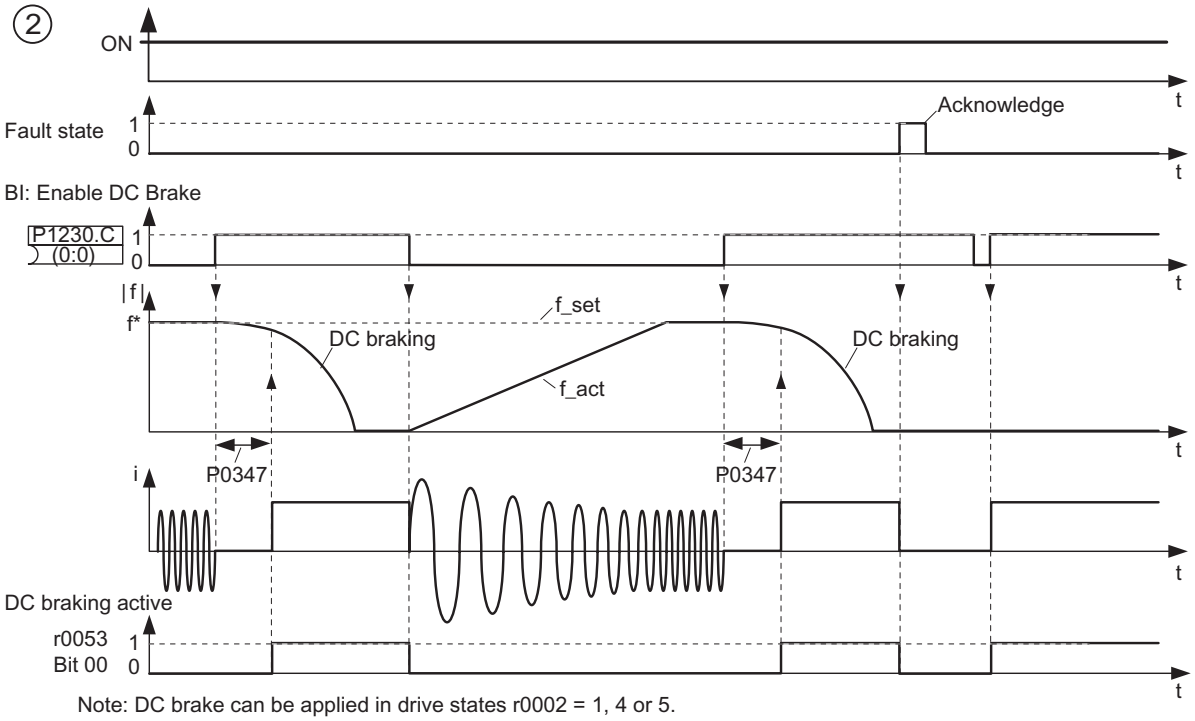

Figure 9-3 DC braking after external selection

Note

1. The "DC braking" function is only practical for induction motors!
2. DC braking is not suitable to hold suspended loads!
3. For DC current braking, the motor kinetic energy is converted into thermal energy in the motor. The motor can overheat if braking lasts too long!
4. While DC braking, there is no other way of influencing the motor speed using an external control. When parameterizing and setting the motor system, then as far as possible, it should be tested using real loads!

9.1.2 Compound braking

Data

Parameter range:	P1236
Warnings:	-
Faults:	-
Function chart number:	-

Description

For compound braking (this is enabled using P1236) DC braking is superimposed with regenerative braking (where the motor regenerates into the line supply as it brakes along a ramp). If the DC link voltage exceeds the compound switch-in threshold $V_{DC\text{-}Comp}$ (see figure below), then a DC current is impressed as a function of P1236. In this case, braking is possible with a controlled (closed-loop) motor frequency and minimum regenerative feedback. Effective braking is obtained without having to use additional components by optimizing the ramp-down time (P1121 for OFF1 or when braking from f1 to f2, P1135 for OFF3) and using compound braking P1236.

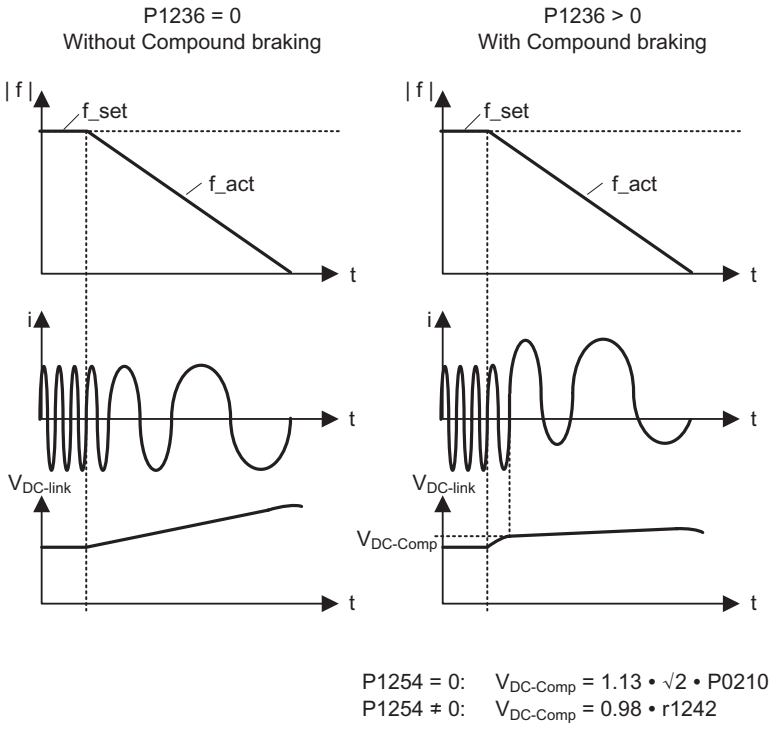

Figure 9-4 Compound braking

The compound braking switch-in threshold $V_{DC\text{-}Comp}$ is calculated as a function of parameter P1254 (Auto detect V_{DC} switch-on levels) either directly using the line supply voltage P0210 or indirectly using the DC link voltage and r1242 (refer to the formula in the figure above).

⚠ WARNING

For compound braking, regenerative braking is superimposed on the DC braking (braking along a ramp). This means that components of the kinetic energy of the motor and motor load are converted into thermal energy in the motor. This can cause the motor to overheat if this power loss is too high or if the brake operation takes too long!

Note

Only active in conjunction with V/f control.

Compound braking is deactivated, if:

- flying restart is active,
- DC braking is active, and
- Vector control is selected.

The compound switch-in threshold $V_{DC\text{-}Comp}$ is dependent on P1254:

$V_{DC\text{-}Comp}(P1254 = 0) \neq V_{DC\text{-}Comp}(P1254 \neq 0)$

9.2 Dynamic Brakes

Overview

The inverters have two dynamic braking technologies:

- Chopper resistor
- Regenerative braking

Power Module functions

Table 9-1 Power Module relating functions

	SINAMCIS G120			SINAMICS G120D	ET 200S FC	ET 200pro FC
	PM240	PM250	PM260	PM250D	IPM25	
Dynamic braking via chopper resistor	X	---	---	---	---	---
Dynamic braking via regenerative braking	---	X	X	X	X	X

9.2.1 Dynamic braking

Data

Parameter range:	P1237
Warnings:	A0535
Faults:	F0022
Function chart number:	-

Description

For several motor applications, in certain operating states, the motor can regenerate. Examples of these applications include:

- Cranes
- Traction motors
- Conveyor belts which transport loads downwards.

When the motor is in the regenerative mode, the energy from the motor is fed back into the DC link of the motor through the inverter. This means that the DC link voltage increases and when the maximum threshold is reached, the inverter is shutdown (tripped) with fault F0002.

This shutdown (trip) can be avoided by using dynamic braking. Contrary to DC and compound braking, this technique requires that an external braking resistor is installed.

The advantages of dynamic resistor braking include:

- The regenerative energy is not converted into heat in the motor.
- It is significantly more dynamic and can be used in all operating states (not only when an OFF command is output).

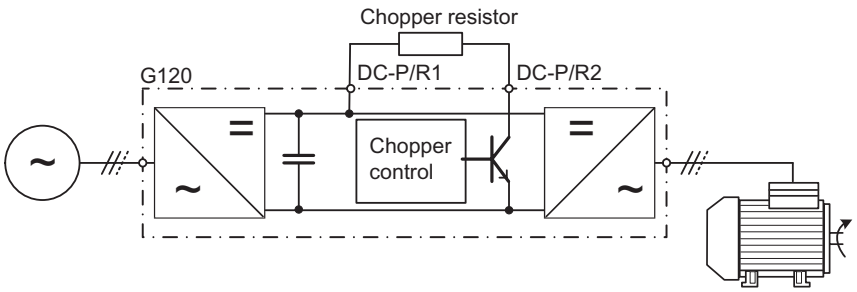

Figure 9-5 Connecting the chopper (braking) resistor

The braking energy in the DC link is converted into heat when dynamic braking is activated (enabled using P1237). The energy is converted into heat using the voltage-controlled chopper resistor (ballast resistor). When regenerative energy is fed back to the DC link and in consequence the DC link threshold $V_{DC,\ Chopper}$ is exceeded, then the chopper resistor is switched in using an electronic semiconductor switch.

Switch-in threshold of the chopper resistor:

If P1254 = 0: $V_{DC,\ Chopper} = 1.13 \cdot \sqrt{2} \cdot V_{line\ supply} = 1.13 \cdot \sqrt{2} \cdot P0210$

Otherwise: $V_{DC,\ Chopper} = 0.98 \cdot r1242$

The chopper switch-in threshold $V_{DC\ chopper}$ is calculated as a function of parameter P1254 (Auto detect V_{DC} switch-on levels), either directly using the line supply voltage P0210 or indirectly using the DC link voltage and r1242.

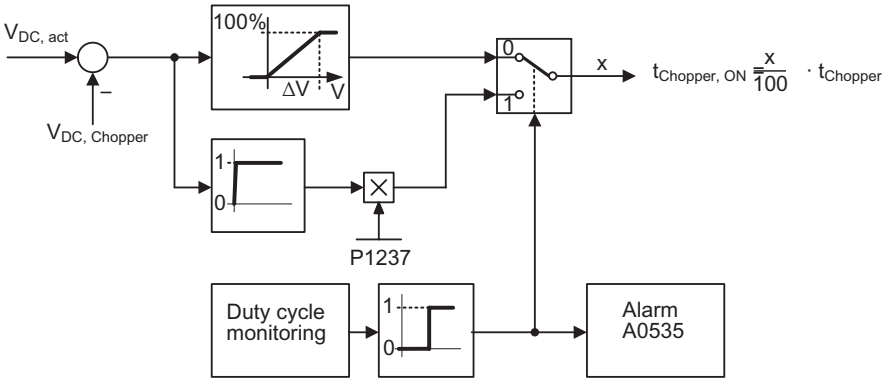

	Mains		
	200 - 240 V	380 - 480 V	500 - 600 V
ΔV	9.8 V	17.0 V	21.3 V

Figure 9-6 Mode of operation of the dynamic braking

The regenerative (braking) energy is converted into thermal energy using the chopper resistor. A braking module (chopper control) is integrated in the DC link for this purpose. The chopper of the braking module switches the resistor with a mark-space ratio corresponding to the regenerative power to be dissipated. The braking module is only active if, as a result of the regenerative operation, the DC link voltage lies above the chopper switch-in threshold $V_{DC\ chopper}$. This means that the braking module is not active in normal operation when motoring.

The chopper resistor is only designed for a specific power and a certain load duty cycle and can only absorb a limited amount of braking energy within a specific time period. The chopper resistors, specified in the catalog, have load duty cycle as shown in the figure below.

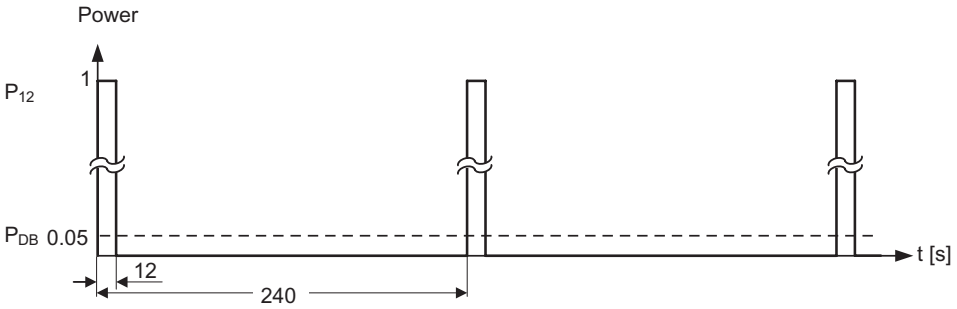

P_{DB} = continuous power

P_{12} = $20 \cdot P_{DB}$ = permissable power for 12 s every 240 s

Figure 9-7 Load duty cycle - chopper resistors

This load duty cycle is saved in the inverter for P1237 = 1 (→ 5 %). If the values are exceeded due to the load required, then when the maximum acceptable braking energy is reached, the load duty cycle monitoring controls the chopper so that the value is reduced to the value entered in parameter P1237. This means that the energy to be dissipated in the chopper resistor is reduced, which means that the DC link voltage quickly increases due to the regenerative energy available and the inverter is shutdown (tripped) due to a DC link overvoltage condition.

If the continuous power or the load duty cycle for a resistor is too high, then the continuous rating can be quadrupled using four resistors in a bridge circuit configuration (see figure below). In this case, in addition, the load duty cycle must be increased using parameter P1237 from P1237 = 1 (→ 5 %) to P1237 = 3 (→ 20 %). When using the bridge circuit, the overtemperature switch of the resistors should be connected in series and incorporated in the fault circuit. This guarantes, that when a resistor overheats, the complete system/inverter is shut down.

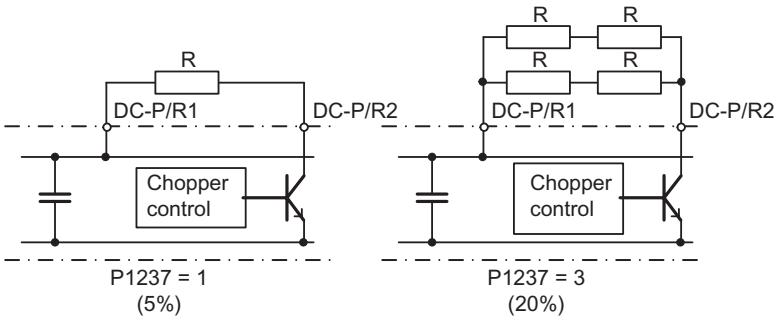

Figure 9-8 Increasing the level of braking energy which can be absorbed

The continuous power and the load duty cycle are modified using parameter P1237. If the load duty cycle monitoring switches from the peak power (100 %) to the continuous power, then this is dissipated for an unlimited length of time in the braking resistor. Contrary to the braking resistor, as listed in the catalog, the chopper control can be permanently operated with 100 % power.

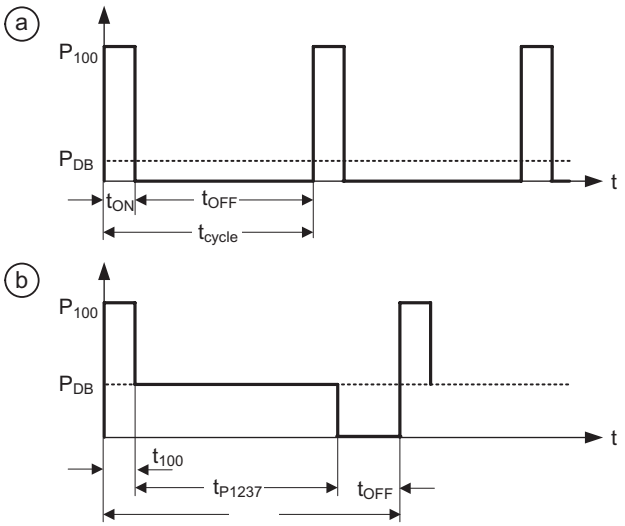

P1237	t_{ON}	t_{OFF}	t_{cycle}	P_{DB}
5%	12.0	228.0	240.0	0.05
10%	12.6	114.0	126.6	0.10
20%	14.2	57.0	71.2	0.20
50%	22.8	22.8	45.6	0.50
100%	Infinite	0	Infinite	1.00

Figure 9-9 Chopper load duty cycle

The braking module is integrated in the inverter and the braking resistor can be connected using the external terminals DC-P/R1 and R2 (for more details refer to Operating Instructions of the corresponding Power Module). Where the DC-P/R1 is the positive terminal for the braking resistor and R2 is the negative terminal for the braking resistor.

⚠ WARNING

Braking resistors, which are to be mounted on the inverter, must be designed so that they can tolerate the power dissipated.

If an unsuitable braking resistor is used there is a danger of fire and that the associated inverter will be significantly damaged.

The chopper control, integrated in the inverter is designed for the braking resistor value assigned in Catalog; e.g.:

- Power Module PM240 6SL3224-0BE24-0AA0
- brake resistor 6SL3201-0BE12-0AA0
- brake resistor value 160 Ω

A brake resistor with a lower resistance value will destroy the inverter. In this case, an external braking unit must be used.

When operational, the temperature of braking resistors increases – do not touch! Ensure that there is sufficient clearance around the unit and there is adequate ventilation.

A temperature protection switch must be used to protect the units against overheating.

Note

The switch-on threshold V_{DC} chopper of the dynamic resistor braking is dependent on P1254

$V_{DC\ chopper}$(P1254 = 0) ≠ $V_{DC\ chopper}$(P1254 ≠ 0).

External braking modules (chopper units) including braking resistor can be used with all of the sizes of inverters. When engineering the system, the particular braking module/resistor must be taken into consideration.

9.2.2 Regenerative braking

Data

Parameter range:	P0640
	P1082, P1531
	r1537
Faults:	F0028
Function chart number:	-

Description

For certain drive applications, the motor can operate as a generator in specific operating states. Typical examples of these types of applications include:

- Cranes
- Traversing drives
- Conveyor belts where the material is being transported downwards

For regenerative motor operation, the motor energy is fed back into the line supply via the inverter and the line-commutated rectifier of the inverter. The regenerative power capability depends on the motor speed and on current or voltage limitation parameters.

The maximum regenerative power is limited to 100 % nominal power (HO) of the inverter. It depends furthermore - especially at low frequencies - on the current limitation value (see figure "Regenerative Power").

The advantages of regenerative braking include

- The kinetic energy is not converted into heat in the motor
- The kinetic energy does not have to be converted into heat in an external resistor
- It has a significantly higher dynamic response and can be used in all operating states (not only for an OFF command)
- It allows precise braking along a down ramp
- Continuous regenerative operation is possible - e.g. for cranes

Regeneration with V/f control mode (P1300 < 20)

The regenerative power can be limited via P0640. If the regenerative power exceeds its limit for more than 5 s the inverter will trip with F0028.

Regeneration with vector control mode

The regenerative power can be limited via P1531. If the regenerative power exceeds the limit the drive will not be able to hold its setpoint.

The following graph shows the limiting parameters.

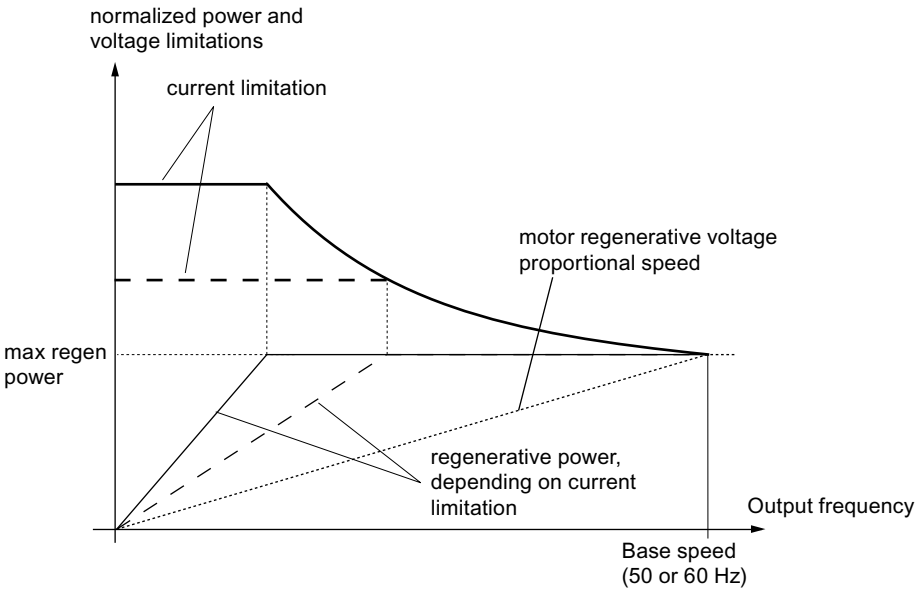

Figure 9-10 Regenerative Power

Note

If regenerative feedback into the line supply is required at the rated frequency the maximum frequency (P1082) must be greater than the rated motor frequency (P0310).

CAUTION

If the power fed back into the line supply exceeds the rated power of the inverter, the inverter will trip with F0028.

The customer must make sure that for his application the inverter is correctly rated based on the regenerative power limit.

9.3 DC Link Voltage Controller

9.3.1 Closed-loop Vdc control

Overview

In addition to DC, compound and dynamic braking, it is possible to prevent a DC link overvoltage condition using the closed-loop DC link voltage controller. With this technique, the output frequency is automatically modified during operation so that the motor does not go too far into the regenerative mode.

Using the DC link voltage controller, it is also possible to prevent the inverter from being shut down (tripped) during brief line supply dips – which cause a DC link undervoltage condition. Also in this case, the output frequency is automatically modified by the DC link voltage controller during operation. Contrary to an overvoltage condition, in this case the motor is operated with increased regenerative operation in order to support and buffer the DC link voltage.

DC link overvoltage

- Cause

  The motor regenerates and feeds too much energy back into the DC link.

- Remedy

  The DC link voltage is further reduced using the V_{dc_max} controller by reducing the regenerative torque down to zero.

DC link undervoltage

- Cause:

  Line supply voltage failure or dip (blackout or brownout)

- Remedy

  A regenerative torque is entered for the operational motor which compensates the existing losses and therefore stabilizes the voltage in the DC link. This technique is carried-out using the V_{dc_min} controller and is known as kinetic buffering.

9.3.2 Vdc_max controller

Data

Parameter range:	P1240, r0056 bit 14
	r1242, P1243
	P1250 – P1254
Warnings:	A0502, A0910, A0911
Faults:	F0002
Function chart number:	FP4600

Description

A brief regenerative load can be handled using this function (enabled using P1240) without the inverter being shut down (tripped) with fault message F0002 ("DC link overvoltage"). In this case, the frequency is controlled (closed-loop) so that the motor doesn't go too far into regenerative operation.

If the inverter regenerates too much when braking the machine due to a fast ramp-down time P1121, then the **braking ramp/ramp time is automatically extended** and the inverter is operated at the DC link voltage limit r1242 (see figure below). If the DC link again falls below the threshold r1242, then the Vdc_max controller withdraws the extension of the braking ramp.

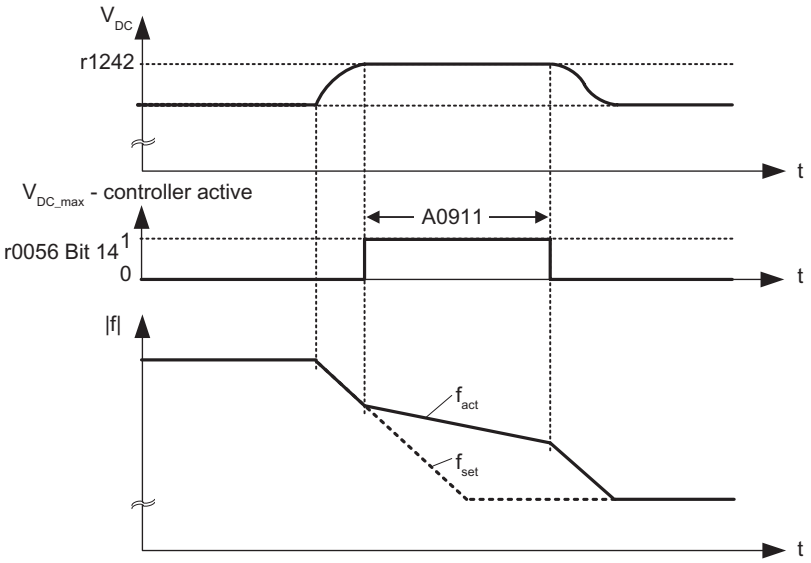

Figure 9-11 Vdc_max controller

On the other hand, if the Vdc_max controller increases the output frequency (e.g. for a steady-state regenerative load), then the Vdc_max controller is disabled by an internal inverter monitoring function and the warning A0910 is output. If the regenerative load continues, the inverter is protected using fault F0002.

In addition to controlling the DC link (closed-loop), the Vdc_max controller supports the stabilizing processes of the speed at the end of an acceleration phase. This is especially the case if there is an overshoot and the motor therefore briefly goes into regenerative operation (damping effect).

Note

If the DC link voltage exceeds the power-on threshold r1242 (switch-on level of Vdc_max.) of the Vdc_max controller in the "Ready" state, then the Vdc_max controller is de-activated and warning A0910 is output.
Cause: The line supply voltage does not match the application situation
Remedy: Refer to parameters P1254 and P0210.

If, in the "Run" state, the DC link voltage exceeds the power-on threshold r1242 and if the Vdc_max controller output is limited by parameter P1253 for approx. 200 ms, then the Vdc_max controller is de-activated and the warning A0910 and, where relevant, fault F0002 are output.
Cause: Line supply voltage P0210 or ramp-down time P1121 too low
The moment of inertia of the motor load is too high
Remedy: Refer to parameters P1254, P0210, P1121
Use a braking resistor

9.3.3 Kinetic buffering

Data

Parameter range:	P1240
	r0056 bit 15
	P1245, r1246, P1247
	P1250
	P1256, P1257
Warnings:	A0503
Faults:	F0003
Function chart number:	FP4600

Description

Brief line supply failures can be buffered using the kinetic buffering function (enabled using P1240). Line supply failures are buffered using the kinetic energy (i.e. moments of inertia) of the motor load. In this case the prerequisite is that the motor load has a sufficiently high moment of inertia - i.e. has sufficient kinetic energy.

Using this technique, the frequency is controlled (closed-loop), so that energy is fed to the inverter from the regenerating motor thus covering the system losses. The losses during the line supply failure still remain which means that the motor speed decreases. When using kinetic buffering it has to be taken into consideration that the motor speed is reduced.

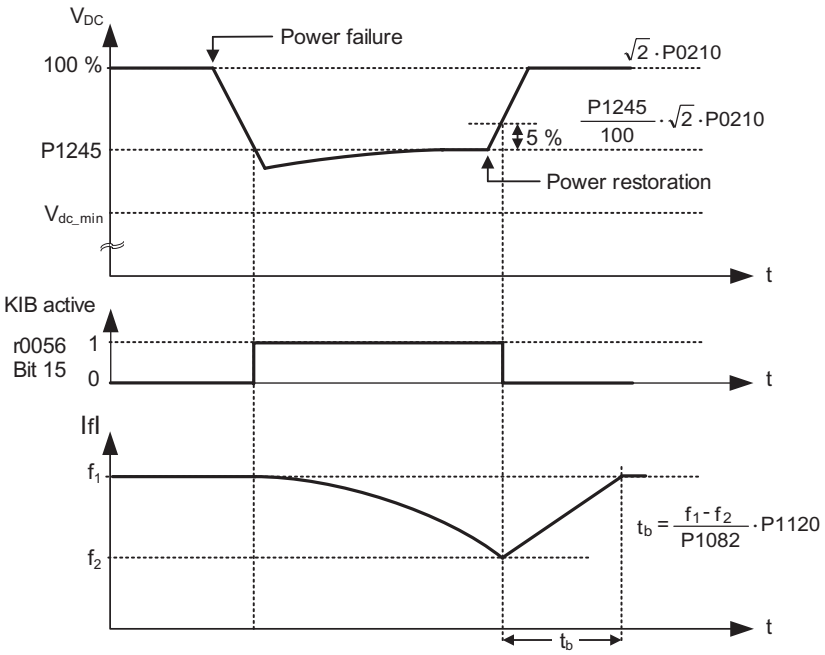

Figure 9-12 Kinetic buffering (Vdc_min controller)

When the line supply returns, the energy feed is again from the line side and the output frequency of the inverter returns to the selected setpoint along the ramp defined by the ramp-function generator.

Note

When the DC link voltage falls below the minimum V_{DC_min}, fault F0003 "Undervoltage" is output and the inverter is shut down. The shutdown threshold V_{DC_min} depends on the inverter type and line supply voltage.

The DC link undervoltage shutdown threshold is 430 V.

List of Abbreviations

A

A.1 Abbreviations

Abbreviations

Table A-1 Abbreviations

Abbreviations	State
A	
AC	Alternating Current
A/D	Analog digital converter
ADR	Address
AFM	Additional frequency modification
AG	Automation Unit
AI	Analog input
AK	Request Identifier
AO	Analog output
AOP	Advanced operation panel
ASIC	Application-specific integrated circuit
ASP	Analog setpoint
ASVM	Asymmetric space vector modulation
B	
BCC	Block check character
BCD	Binary-coded decimal code
BI	Binector input
BIA	Berufsgenossenschaftliches Institut für Arbeitssicherheit
BICO	Binector/connector
BO	Binector output
BOP	Basic Operator Panel
C	
C	Commissioning
CB	Communication board
CCW	Counter-clockwise
CDS	Command data set
CE	Communauté Européenne
CI	Connector input

Abbreviations	State
CM	Configuration management
CMD	Command
CO	Connector output
CO/BO	Connector output/Binector output
COM	Common (terminal is connected to NO or NC)
CT	Commissioning, ready to run
CU	Control Unit
CUT	Commissioning, run, ready to run
CW	Clockwise
D	
DAP	Device Access Point
D/A	Digital analog converter
DC	Direct current
DDS	Drive data set
DI	Digital input
DIP	DIP switch
DO	Digital output
DP	Distributed I/Os
DP-V1	Acyclic data transfer (extended PROFIBUS function)
DS	Drive state
E	
ECD	Equivalent circuit diagram
EEC	European Economic Community
EEPROM	Electrical erasable programmable read-only memory
ELCB	Earth leakage circuit breaker
EMC	Electromagnetic compatibility
EMF	Electromagnetic force
ES	Engineering System
FAQ	Frequently asked question
F	
Fast FFB	Fast freely programmable function blocks
FB	Function block
FCC	Flux current control
FCL	Fast current limiting
FF	Fixed frequency
FFB	Freely programmable function blocks
FOC	Field orientated control
FREQ	Frequency
FSA	Frame size A
FSB	Frame size B
FSC	Frame size C
FSD	Frame size D

Abbreviations	State
FSE	Frame size E
FSF	Frame size F
G	
GSD	Device Data File (Geräte Stamm Datei)
GSG	Getting Started Guide
GUI ID	Global unique identifier
H	
HIW	Main actual value
HMI	Human machine interface
HO	High Overload (Constant Torque)
HSW	Main setpoint
HTL	High-voltage transistor logic
I	
I/O	In-/output
IBN	Commissioning
IGBT	Insulated gate bipolar transistor
IND	Sub-index
J	
JOG	JOG
K	
KIB	Kinetic buffering
L	
LCD	Liquid crystal display
LED	Light emitting diode
LGE	Length
LO	Light Overload (Variable Torque)
LWL	Fiber Optic conductor
M	
MHB	Motor holding brake
MLP	Multi-Language Pack
MOP	Motor operated potentiometer
MMC	Micro Memory Card
N	
NC	Normally closed
NEMA	National Electrical Manufacturers Association
NO	Normally open
O	
OLM	Optical Link Module
OLP	Optical Link Plug
OM	Object Manager
OPI	Operating Instructions
P	

Abbreviations	State
PAP	Parameter Access Point
PID	Proportional, integral, derivative controller
PKE	Parameter ID
PKW	Parameter channel (Parameter/Kennung/Wert)
PLC	Programmable logic control
PM	Power module
PM-IF	Power module interface
PNU	Parameter Number
PNO	PROFIBUS Nutzerorganisation
PPO	Parameter process data object
PTC	Positive temperature coefficient
PWE	Parameter value
PWM	Pulse-width modulation
Pxxxx	Write parameter
PZD	Process data area (Prozeßdaten)
Q	
QC	Quick commissioning
R	
RAM	Random-access memory
RCCB	Residual current circuit breaker
RCD	Residual current device
RFG	Ramp-function generator
RFI	Radio frequency interference
ROM	Read-only memory
RPM	Revolutions per minute
rxxxx	read-only parameters of analogue signals
S	
SBC	Safe Break Control
SLVC	Sensorless vector control
SLS	Safe-Limited Speed
SOL	Serial option link
SS1	Safe Stop 1
STO	Safe Torque Off
STW	Control word
STX	Start of text
SVM	Space vector modulation
T	
TTL	Transistor-transistor logic
U	
USS	Universal serial interface
V	
V/f	Voltage/frequency

Abbreviations	State
VC	Vector control
VT	Variable torque
W	
WEA	Automatic restart
Z	
ZSW	Status word
ZUSW	Additional setpoint

Index

2

2-wire control, 145, 147

A

Analog inputs, 174
Analog outputs, 176
Automatic restart, 60

B

BICO parameterization, 171
BICO technology, 29
Binector Connector Technology, 29
brake
    electro-mechanical, 73
    instant, 79
brake
    motor holding, 74

C

Chip temperature, 53
Closed-loop control, 105
Closed-loop DC link voltage controller, 245
Closed-loop torque control, 137, 139
Compound braking, 237
Current limiting, 117, 143

D

Data sets, 66
DC braking, 234
DC link overvoltage, 245
DC link undervoltage, 245
Digital inputs, 169
    Fixed frequencies, 153
Digital outputs, 172
Droop, 136
Dynamic brakes, 239
Dynamic braking, 239
dynamization
    Forced, 186
    Process, 187
    Time controlled forced, 186

E

electro-mechanical brake, 73
Electronic brakes, 233

F

Fail-safe functions, 179
Fast FFB, 94
Fast free function blocks, 94
FFB, 94
Fixed frequencies, 153
Flying restart, 62
Flying restart with speed encoder, 63
Flying restart without speed encoder, 63
Forced dynamization, 186
Free function blocks, 94
frequency control
    switch-over to torque control, 140

H

Heatsink temperature, 53

I

I_max controller, 117
i2t monitoring, 53
Inputs and outputs, 169
instant brake, 79

J

JOG, 43

K

Kinetic buffering, 247

L

Limiting the torque setpoint, 142
Line supply failure, 61
Line undervoltage, 61
Load torque monitoring, 49

M

Maximum fault reaction time, 188
Modification - frequency setpoint, 81
Monitoring functions / messages, 46
Monitoring parameters, 22
Monitoring the fail-safe functions, 186
Motor data identification, 33
Motor holding brake, 74

O

Open-loop control, 105
Overload responses, 53

P

Parameter
    Attributes, 23
    Index, 23
Parameter attribute
    Access level, 24
    Active, 27
    BICO, 24
    Can be changed, 25
    Data type, 25
    Grouping, 26
    Quick commissioning, 27
    Unit, 26
    Value range, 27
Parameters
    Data sets, 28
PID controller, 157
PID dancer roll control, 161
PID fixed setpoint, 166
PID motorized potentiometer, 165
Positioning ramp down, 40
power module monitor temperature and overload, 53
Power module protection, 52
Process dynamization, 187

R

Ramp-function generator, 84
Regenerative braking, 243

S

Safe Brake Control, 231
Safe Stop 1 function, 196
SafeTorque Off function, 193
Safety notes
    General Warnings, Cautions and Notices, 12
    Safety Instructions, 11
Setpoint channel, 81
Siemens standard Control, 147
Slip compensation, 113
SLS
    mode 0, 202
    mode 1, 210
    mode 2, 218, 223
Speed controller, 133
speed encoder
    Flying restart with, 63
    Flying restart without, 63
Stall limiting, 143
switch-over from frequency to torque control, 140

T

Thermal monitoring functions, 53
Time controlled forced dynamization, 186
torque control
    switch-over from frequency control, 140
Torque limiting, 142

V

V/f control, 106
Vdc_max controller, 246
Vector control, 119
    with speed encoder, 128
    without speed encoder, 121
Voltage boost, 110

Siemens AG

Industry Sector
Drive Technologies
Standard Drives
Postfach 32 69
D-91050 Erlangen

www.siemens.de/sinamics-g120